US00D860889S

(12) United States Design Patent

Ninov et al.

(10) Patent No.: US D860,889 S
(45) Date of Patent: ** Sep. 24, 2019

(54) **VEHICLE HOOD**

(71) Applicants: **Deyan Ninov**, Royal Oak, MI (US); **Michael Gillam**, Oxford, MI (US); **Gregory A Howell**, Farmington, MI (US)

(72) Inventors: **Deyan Ninov**, Royal Oak, MI (US); **Michael Gillam**, Oxford, MI (US); **Gregory A Howell**, Farmington, MI (US)

(73) Assignee: **FCA US LLC**, Auburn Hills, MI (US)

(**) Term: **15 Years**

(21) Appl. No.: **29/673,657**

(22) Filed: **Dec. 17, 2018**

Related U.S. Application Data

(63) Continuation-in-part of application No. 29/626,566, filed on Nov. 17, 2011, now Pat. No. Des. 836,036.

(51) **LOC (12) Cl.** **12-16**

(52) **U.S. Cl.**
USPC **D12/173**

(58) **Field of Classification Search**
USPC D12/173, 196, 86, 90–92, 181; 180/69.21, 69.2, 69.22; 296/190.1–190.5, 296/190.8, 193.11, 37.6
CPC B62D 25/10; B62D 25/06; B62D 65/02; B62D 25/12; B60Q 1/00
See application file for complete search history.

(56) **References Cited**

U.S. PATENT DOCUMENTS

D709,412	S	*	7/2014	Mays	D12/173
D808,311	S	*	1/2018	Piscitelli	D12/173
D823,196	S	*	7/2018	Behmer	D12/173
D826,804	S	*	8/2018	Buck	D12/173

* cited by examiner

Primary Examiner — Melody N Brown
(74) *Attorney, Agent, or Firm* — Ralph E. Smith

(57) **CLAIM**

The ornamental design for a vehicle hood, as shown and described.

DESCRIPTION

FIG. **1** is a front perspective view of a vehicle hood showing our new design;
FIG. **2** is a front view thereof;
FIG. **3** is a rear view thereof;
FIG. **4** is a side view thereof;
FIG. **5** is an opposite side view thereof;
FIG. **6** is a top view thereof; and,
FIG. **7** is a bottom view thereof.
It will be understood that the broken lines shown in the drawings illustrate portions of the vehicle hood that form no part of the claimed design.

1 Claim, 5 Drawing Sheets

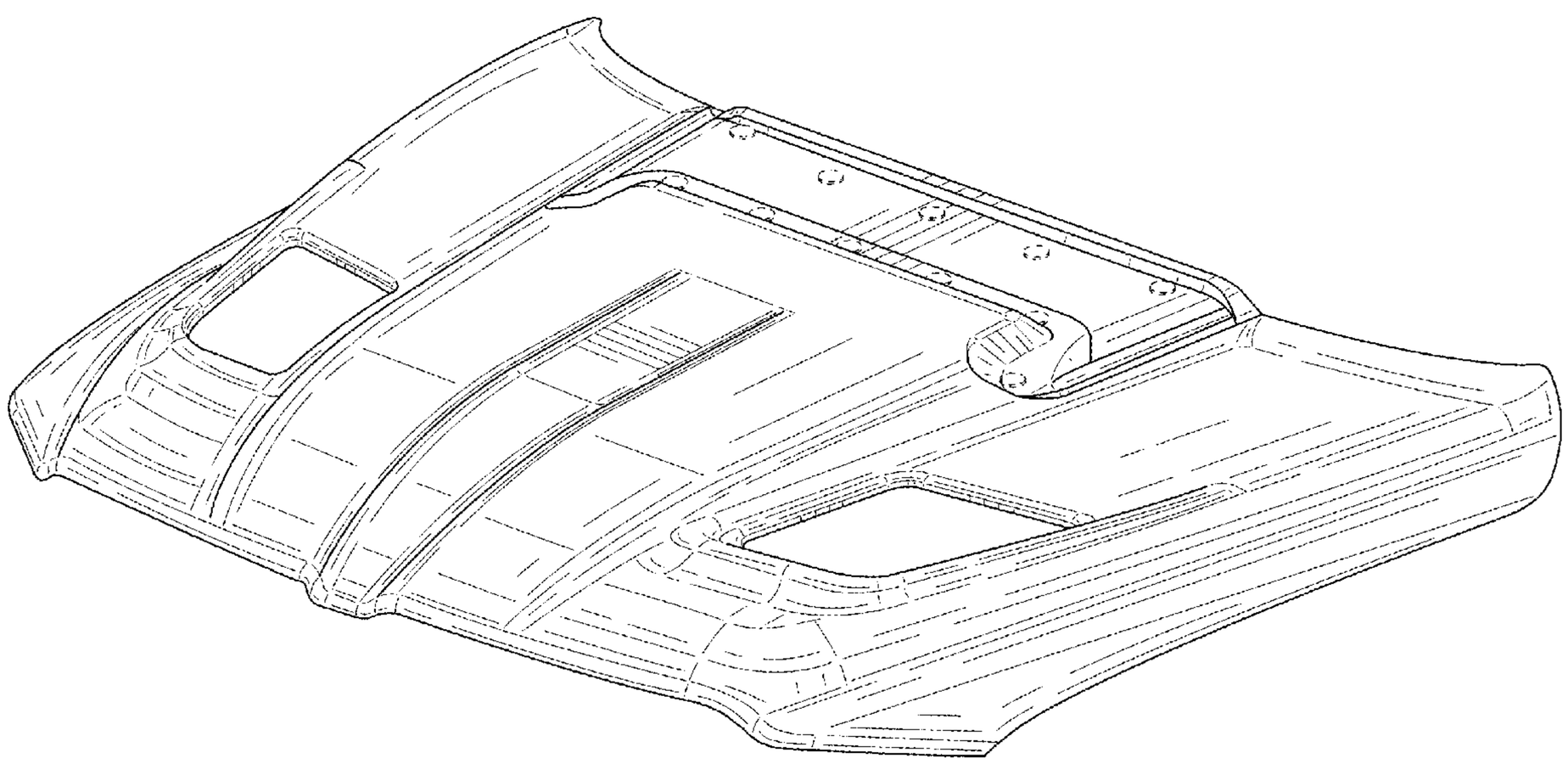

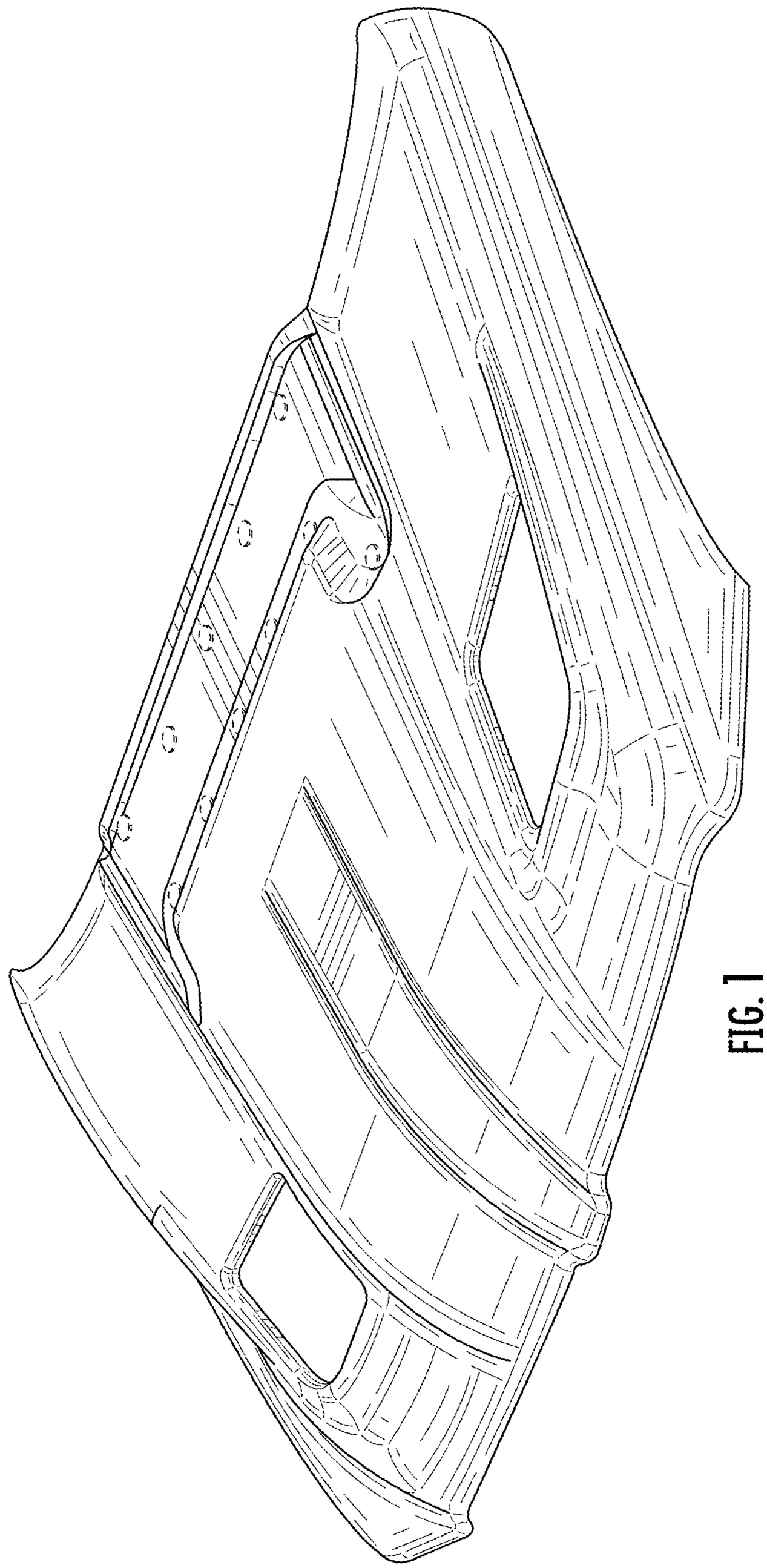

FIG. 1

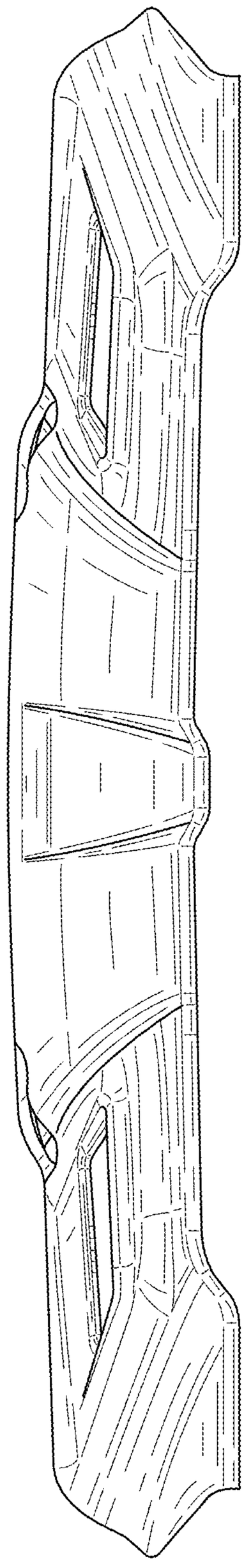

FIG. 2

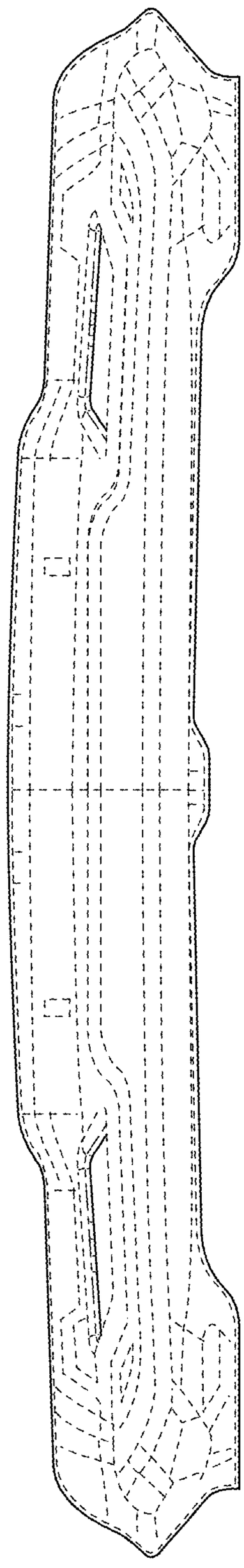

FIG. 3

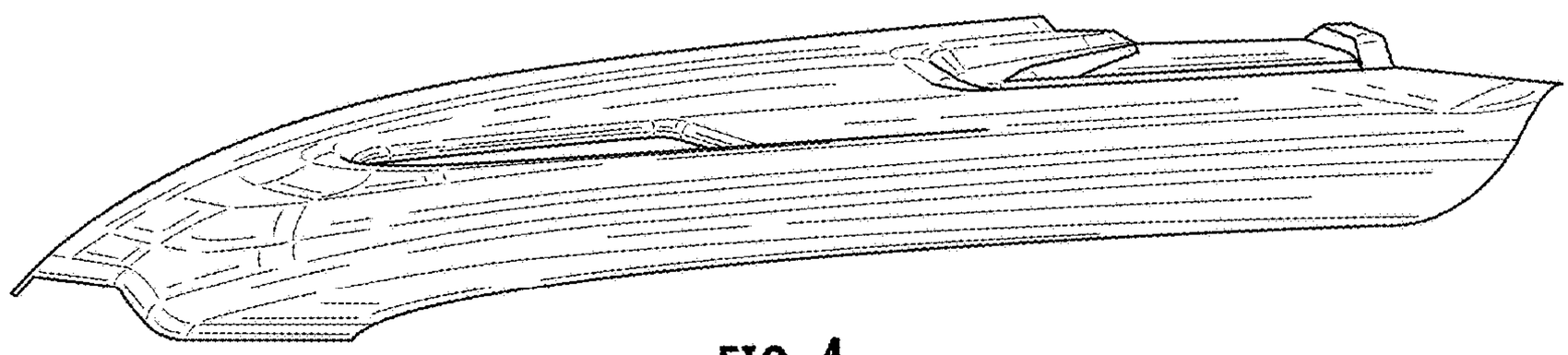

FIG. 4

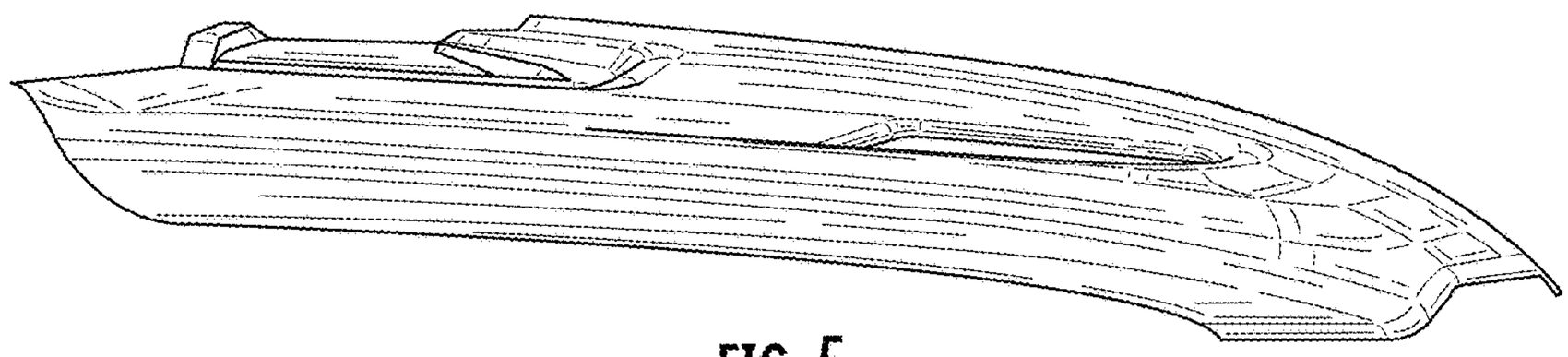

FIG. 5

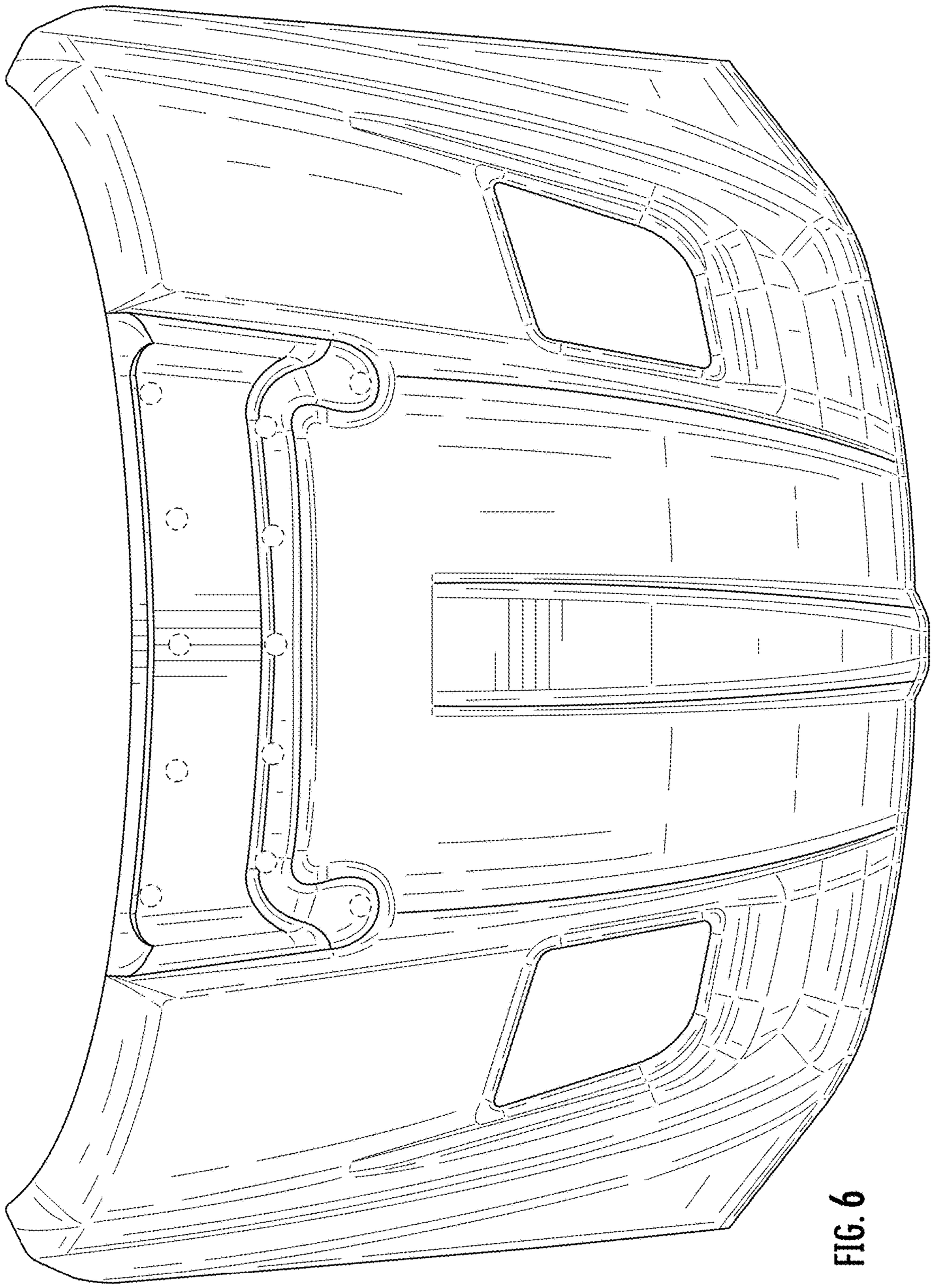

FIG. 6

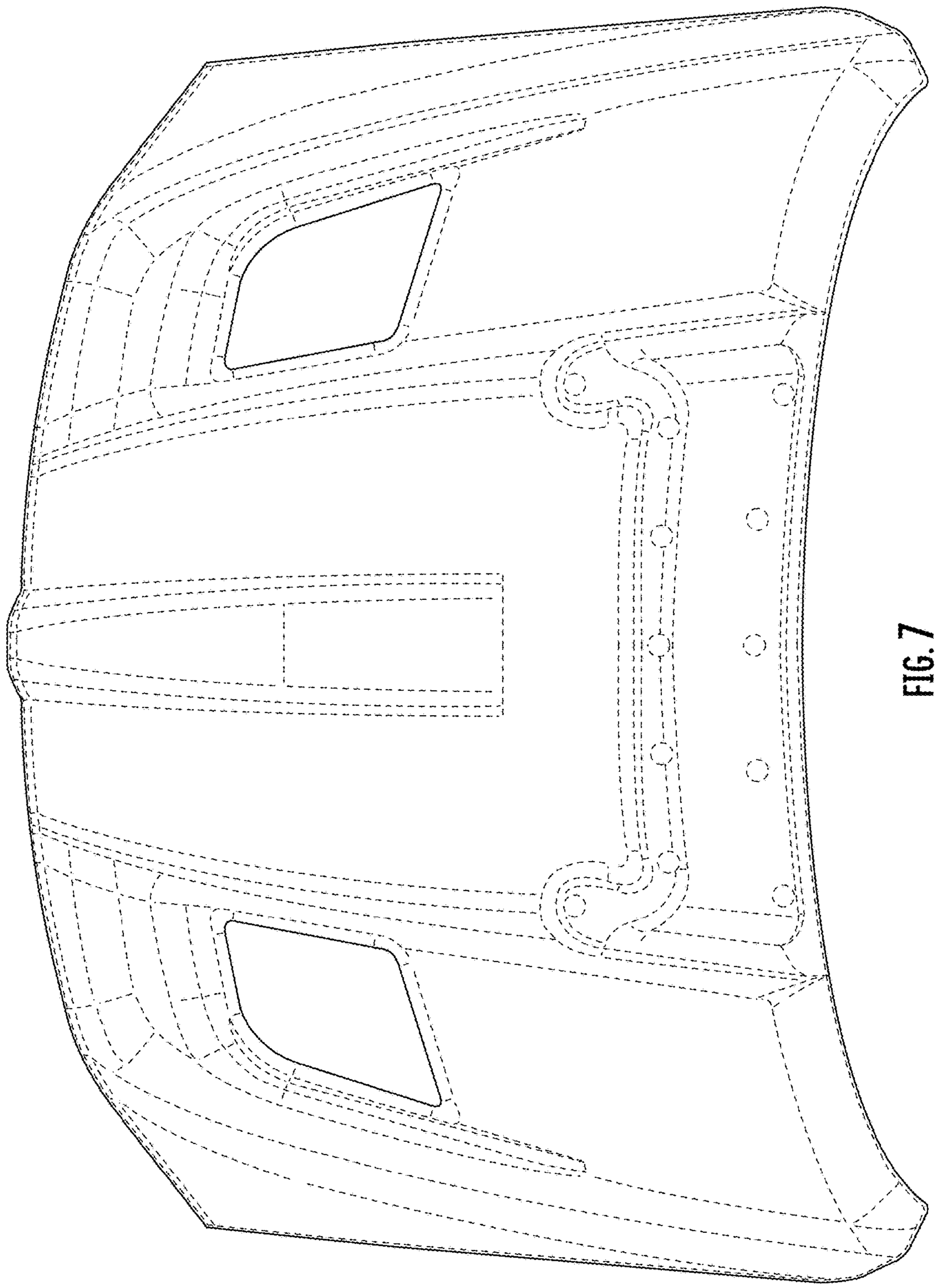

FIG. 7