US00D860713S

(12) United States Design Patent

Bassill et al.

(10) Patent No.: US D860,713 S
(45) Date of Patent: ** Sep. 24, 2019

(54) **INDUCTION APPLIANCE**

(71) Applicant: **HATCO CORPORATION**, Milwaukee, WI (US)

(72) Inventors: **Brandon Bassill**, Malibu, CA (US); **Nick Bassill**, Malibu, CA (US); **Mark Gilpatric**, Milwaukee, WI (US); **Hans Wildebush**, Milwaukee, WI (US); **Michael Whiteley**, Waukesha, WI (US); **Kelly Wright**, Ringwood, IL (US); **John Scanlon**, Sturgeon Bay, WI (US)

(73) Assignee: **HATCO CORPORATION**, Milwaukee, WI (US)

(**) Term: **15 Years**

(21) Appl. No.: **29/624,990**

(22) Filed: **Nov. 6, 2017**

Related U.S. Application Data

(62) Division of application No. 29/550,719, filed on Jan. 6, 2016, now Pat. No. Des. 814,848, which is a division of application No. 29/506,842, filed on Oct. 21, 2014, now Pat. No. Des. 751,855.

(51) **LOC (12) Cl.** **07-02**

(52) **U.S. Cl.**
USPC **D7/367**; D7/362; D7/363

(58) **Field of Classification Search**
USPC D7/323, 337, 339, 341, 352, 354–355, D7/362–367, 407, 409–411
CPC A21B 1/06; A21B 1/50; A21B 1/52; A47J 37/04; A47J 37/06; A47J 37/015; A47J 37/067; A47J 37/0611; A47J 37/0629; A47J 37/0676; F24C 7/06; F24C 7/083; F24C 15/02; F24C 15/166; H05B 3/20; H05B 3/40; H05B 6/1209
See application file for complete search history.

(56) **References Cited**

U.S. PATENT DOCUMENTS

D139,751	S		12/1944	Springwell	
D187,835	S		5/1960	Lee	
D195,657	S		7/1963	Sullivan	
D205,820	S	*	9/1966	Ryan	D7/364
D229,448	S		11/1973	Traclet	
D230,390	S		2/1974	Tyke	
D236,183	S	*	8/1975	Greger	D7/363
D249,864	S		10/1978	Mackay	
4,145,603	A		3/1979	Mackay	
D261,849	S		11/1981	Funaki	
D285,523	S		9/1986	Ayukawa	
D289,130	S		4/1987	Rengeji	
D289,847	S		5/1987	Okamoto	
D296,509	S		7/1988	Fuke	
D326,387	S		5/1992	Monitto	

(Continued)

Primary Examiner — Ricky Pham
(74) *Attorney, Agent, or Firm* — Ryan Kromholz & Manion, S.C.

(57) **CLAIM**

The ornamental design for an induction appliance, as shown and described.

DESCRIPTION

FIG. **1** is a perspective view of an embodiment of the induction appliance;
FIG. **2** is a front elevation view thereof;
FIG. **3** is a rear elevation view thereof;
FIG. **4** is a right side elevation view thereof;
FIG. **5** is a left side elevation view thereof;
FIG. **6** is a top plan view thereof; and,
FIG. **7** is a bottom plan view thereof.
The broken lines shown in the drawings are for illustrative purposes only and form no part of the claimed design.

1 Claim, 2 Drawing Sheets

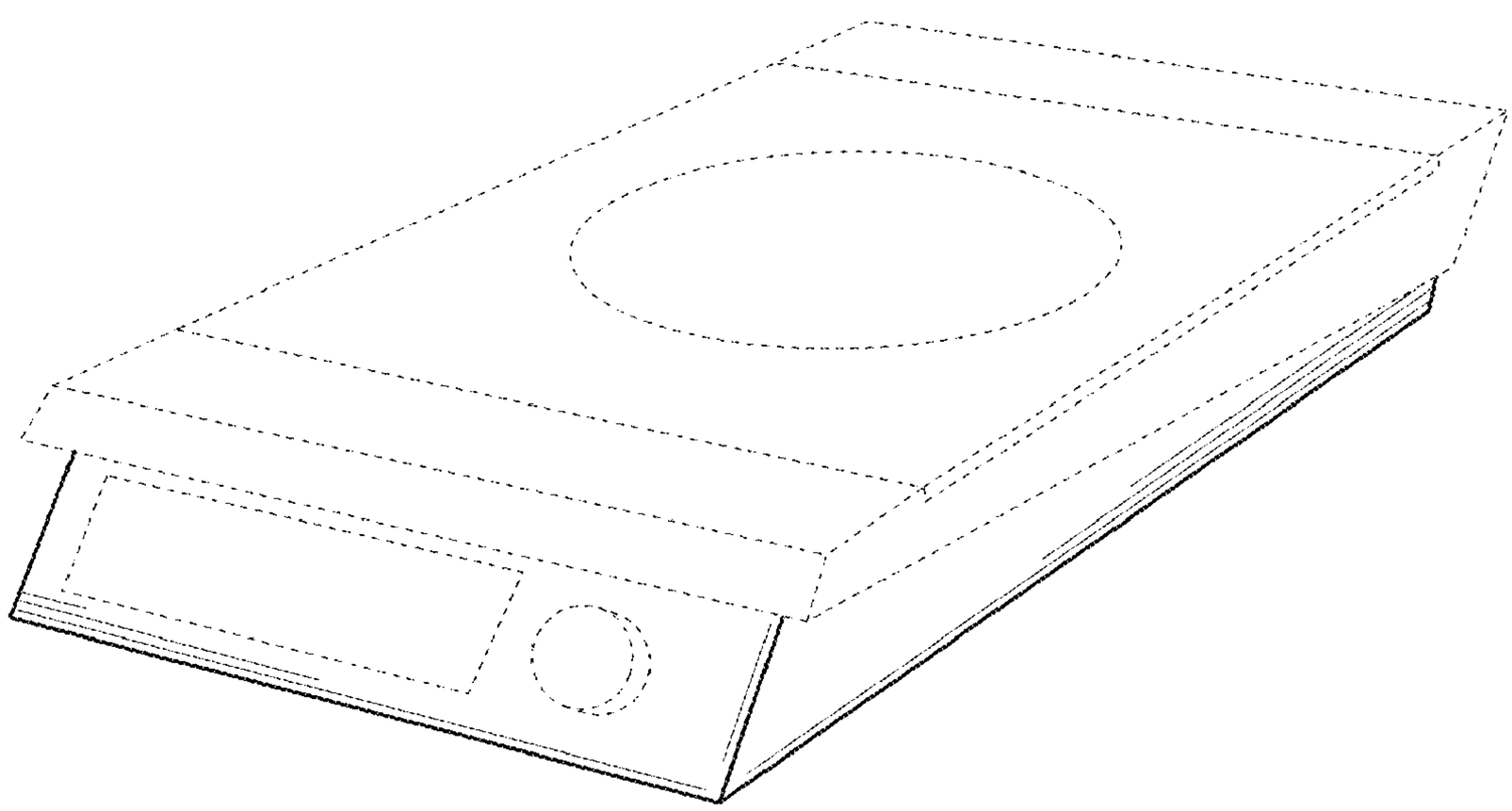

(56) **References Cited**

U.S. PATENT DOCUMENTS

D341,987	S		12/1993	Erickson	
5,687,642	A		11/1997	Chao	
5,740,723	A		4/1998	Lin	
6,087,637	A		7/2000	Fischer	
D438,423	S		3/2001	Bassill	
D483,224	S		12/2003	Clark	
D501,117	S		1/2005	Bassill	
D503,067	S		3/2005	Lubowicki	
D533,016	S		12/2006	Genslak	
D575,098	S		8/2008	Seymour	
D580,701	S		11/2008	Wojcik	
D621,205	S		8/2010	Yeung	
D643,674	S		8/2011	Lee	
D644,867	S		9/2011	Janvier	
D686,036	S		7/2013	Nelson	
D696,549	S		12/2013	Pennington	
D706,576	S	*	6/2014	Boo	D7/407
D745,802	S		12/2015	Yao	
D751,855	S		3/2016	Bassill	
D755,560	S		5/2016	Day	
D790,910	S	*	7/2017	Hosoda	D7/362
D793,801	S	*	8/2017	Bassill	D7/362
D799,886	S	*	10/2017	Davenport	D7/352
D814,848	S	*	4/2018	Bassill	D7/367
D830,762	S	*	10/2018	Bassill	D7/367
D830,763	S	*	10/2018	Bassill	D7/367
D831,409	S	*	10/2018	Bassill	D7/367
D831,410	S	*	10/2018	Bassill	D7/367
D832,028	S	*	10/2018	Hosoda	D7/363
2006/0163242	A1		7/2006	Ciancimino	
2016/0330798	A1	*	11/2016	Kamaunu	H05B 6/1209

* cited by examiner

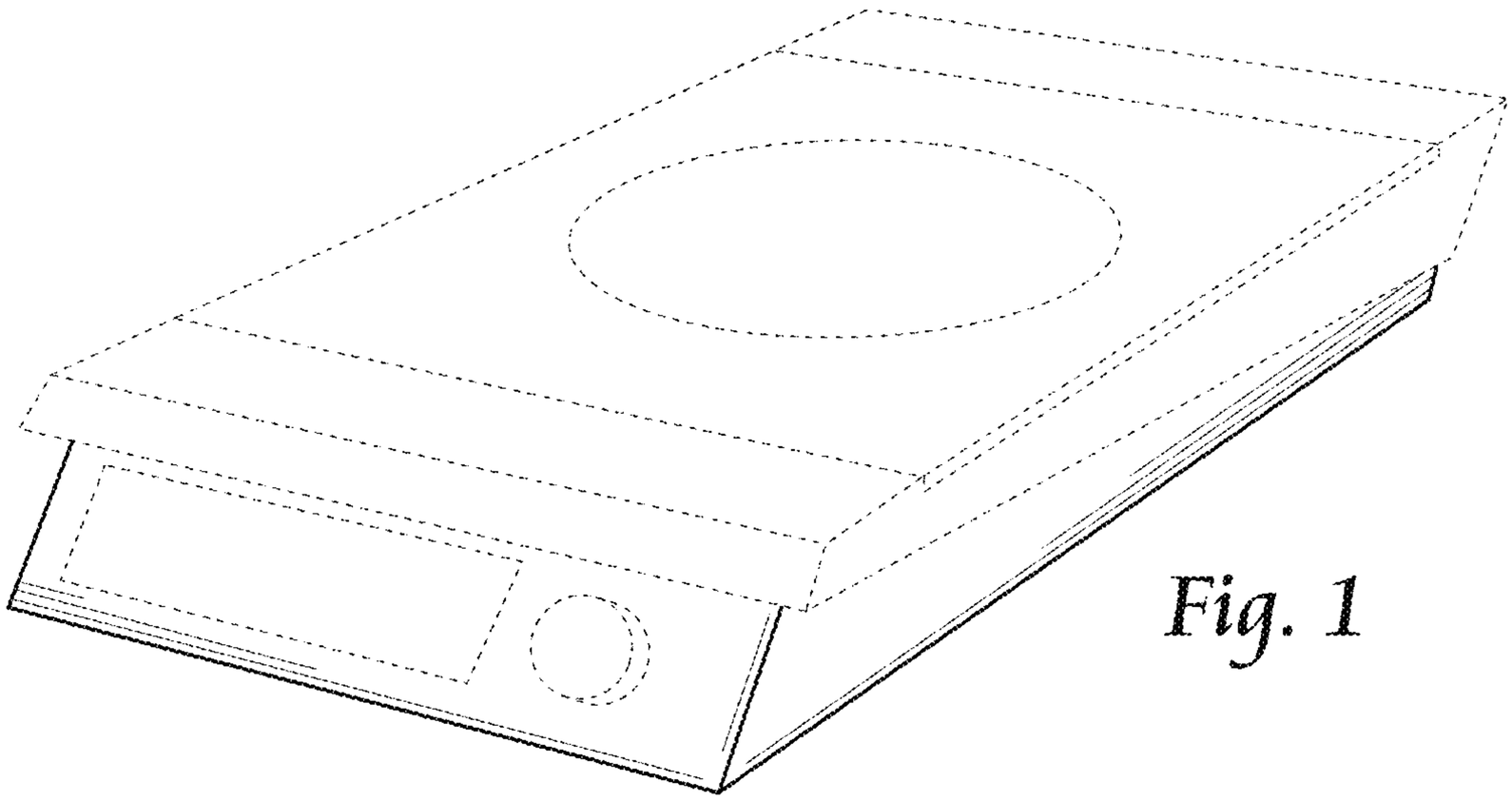

Fig. 1

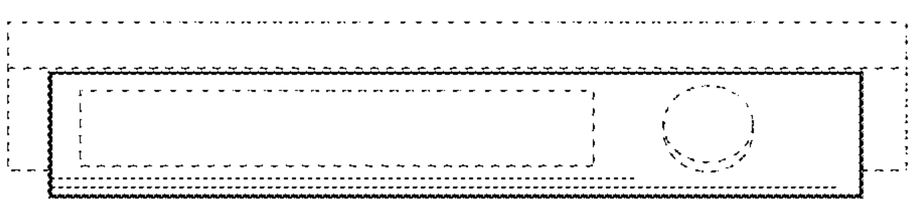

Fig. 2

Fig. 3

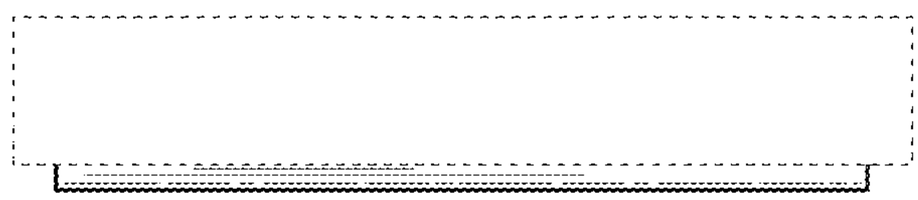

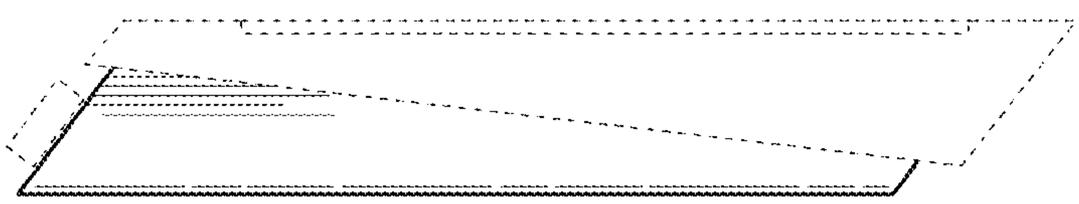

Fig. 4

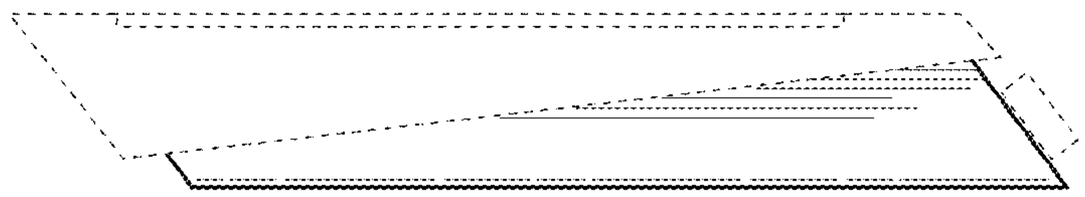

Fig. 5

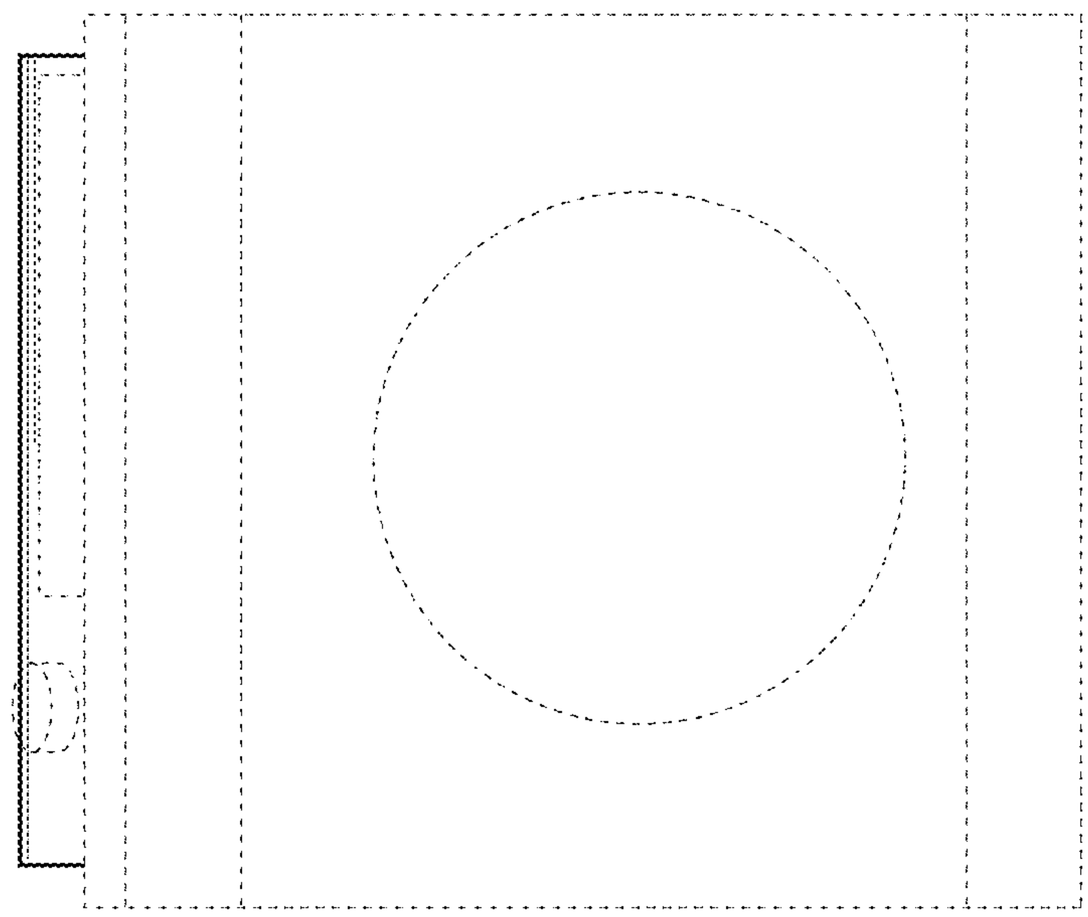

Fig. 6

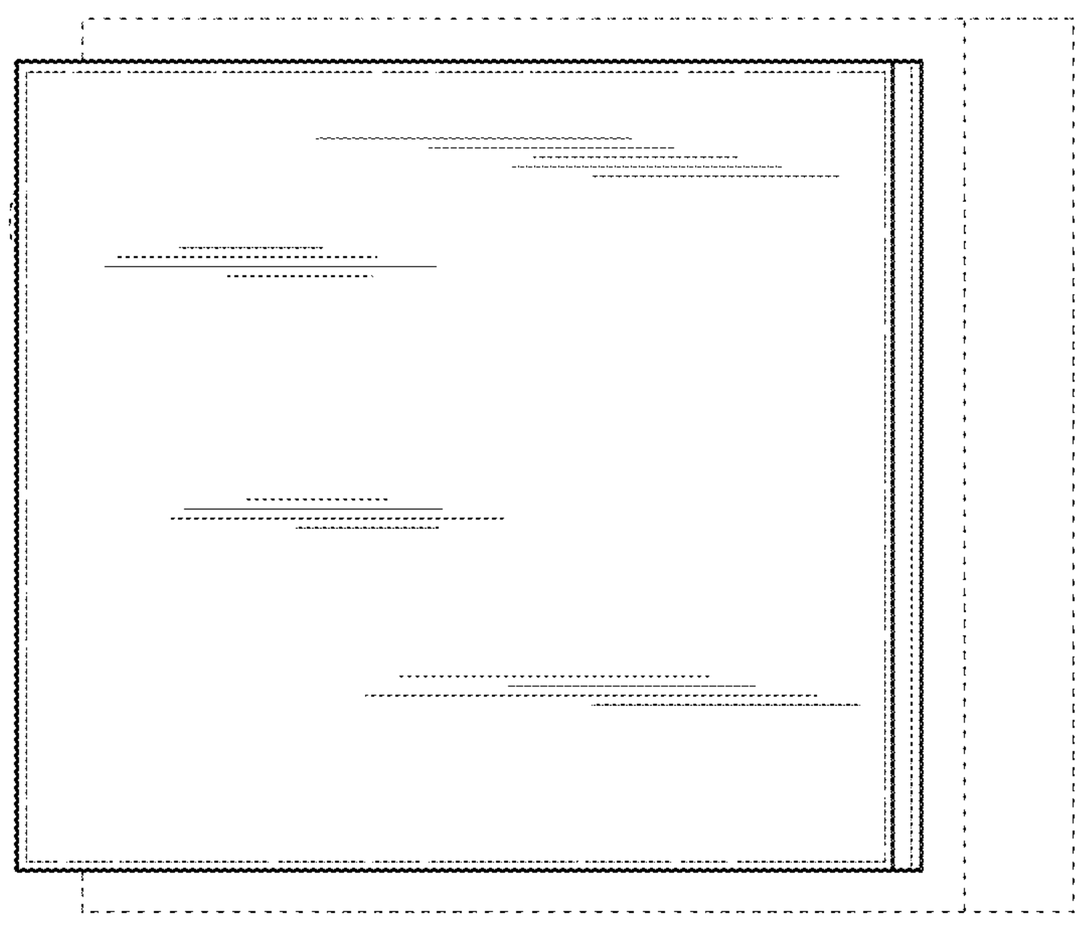

Fig. 7