US00D860395S

(12) United States Design Patent

Seum et al.

(10) Patent No.: US D860,395 S
(45) Date of Patent: ** Sep. 17, 2019

(54) **FAUCET**

(71) Applicant: **Grohe AG**, Hemer (DE)

(72) Inventors: **Michael Seum**, Duesseldorf (DE); **Jacob Nitz**, Brooklyn, NY (US)

(73) Assignee: **Grohe AG**, Hemer (DE)

(**) Term: **15 Years**

(21) Appl. No.: **29/638,848**

(22) Filed: **Mar. 1, 2018**

(30) **Foreign Application Priority Data**

Sep. 1, 2017 (EM) 004203016-0007

(51) **LOC (12) Cl.** **23-01**

(52) **U.S. Cl.**
USPC **D23/238**

(58) **Field of Classification Search**
USPC D8/307–308; D23/238–243, 249, 255, D23/257, 250, 252, 254
CPC F16K 31/60; F16K 31/602; F16K 31/605; F16K 31/607; E03C 1/0412; E03C 1/0409
See application file for complete search history.

(56) **References Cited**

U.S. PATENT DOCUMENTS

D390,922 S * 2/1998 Oswaks D23/252
D629,873 S * 12/2010 Roy D23/255
D723,665 S * 3/2015 Kulig D23/238
9,234,336 B2 * 1/2016 Yang E03C 1/0404
D757,225 S * 5/2016 Schoenherr D23/252
D757,902 S * 5/2016 Schoenherr D23/238
9,791,060 B2 * 10/2017 Chiu E03C 1/0412

* cited by examiner

Primary Examiner — Robert A Delehanty
(74) *Attorney, Agent, or Firm* — Muncy, Geissler, Olds & Lowe, P.C.

(57) **CLAIM**

The ornamental design for a faucet, as shown and described.

DESCRIPTION

FIG. **1** is a front perspective view of a faucet according to the present invention.
FIG. **2** is a front view of the faucet of FIG. **1**.
FIG. **3** is a rear view of the faucet of FIG. **1**.
FIG. **4** is a left side view of the faucet of FIG. **1**.
FIG. **5** is a right side view of the faucet of FIG. **1**.
FIG. **6** is a top view of the faucet of FIG. **1**; and,
FIG. **7** is a bottom view of the faucet of FIG. **1**.
The dashed lines illustrate environment that does not form a part of the present invention, and no claim is made to the material illustrated with dashed lines.

1 Claim, 7 Drawing Sheets

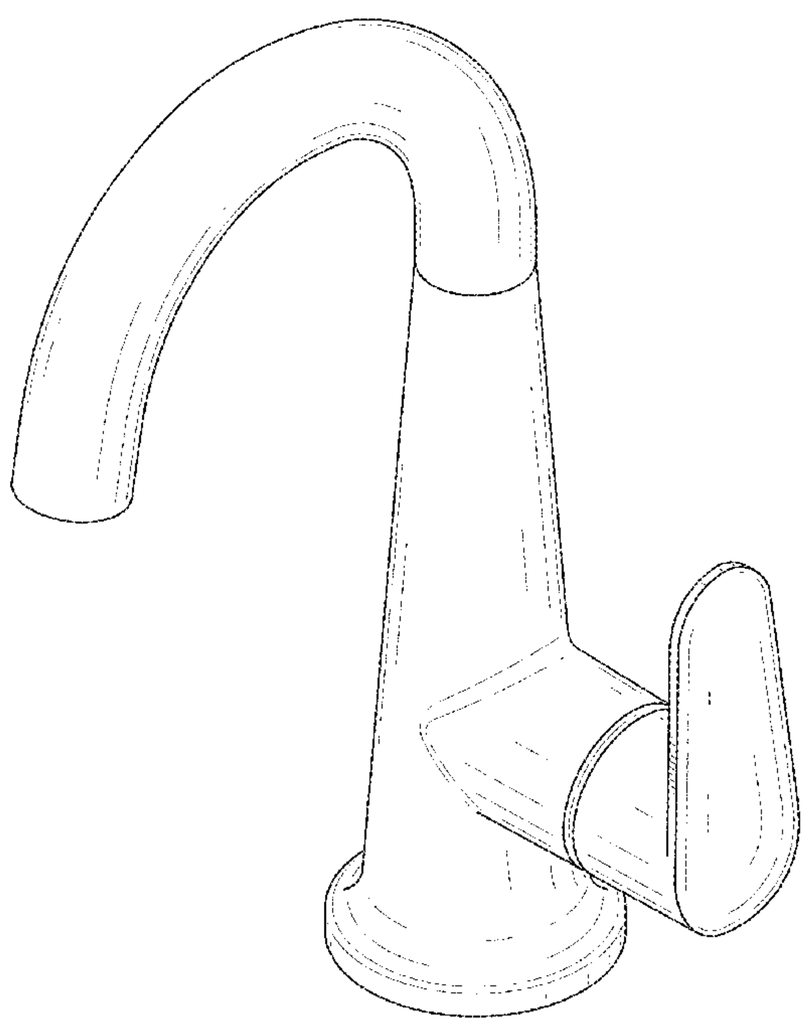

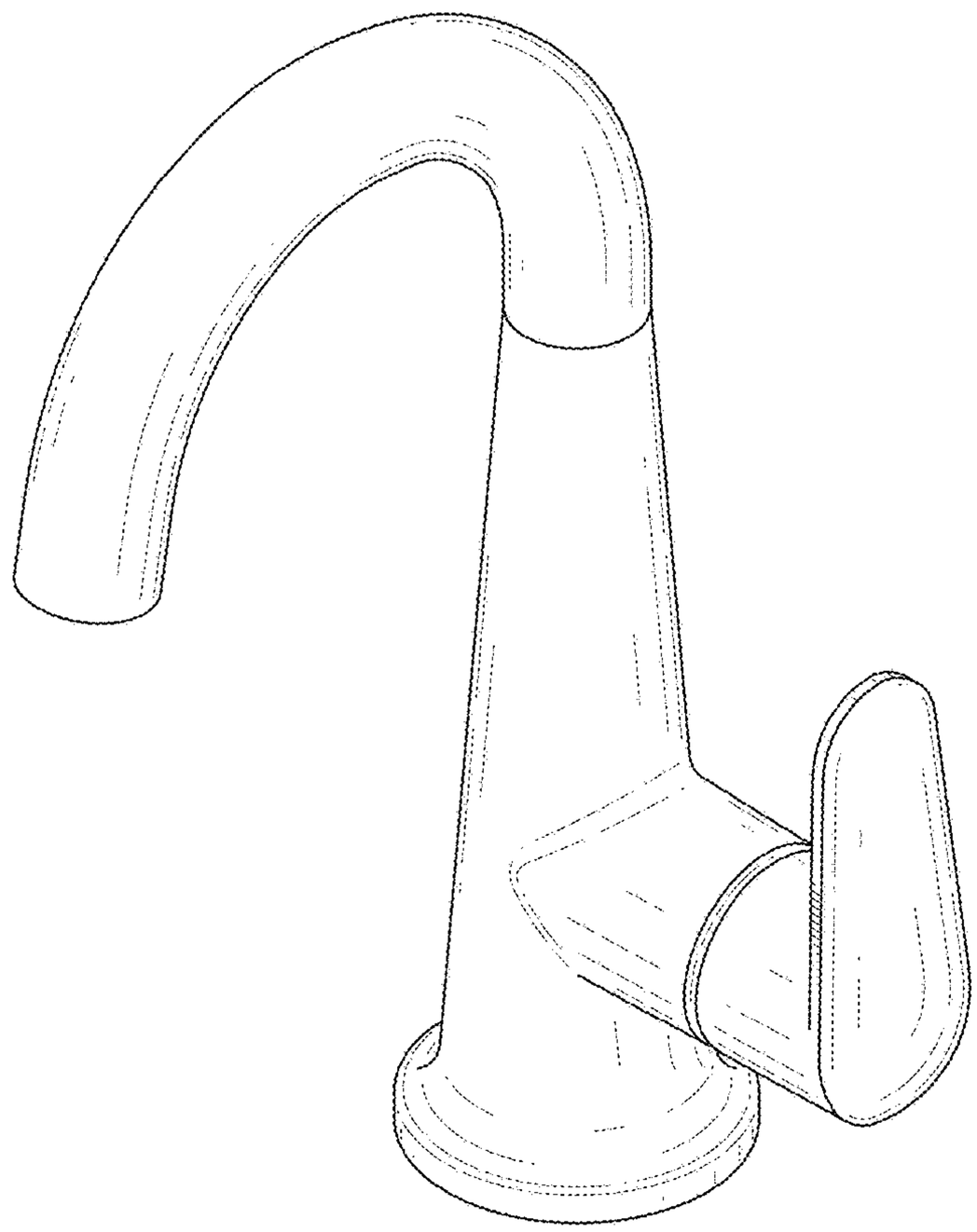

FIG.1

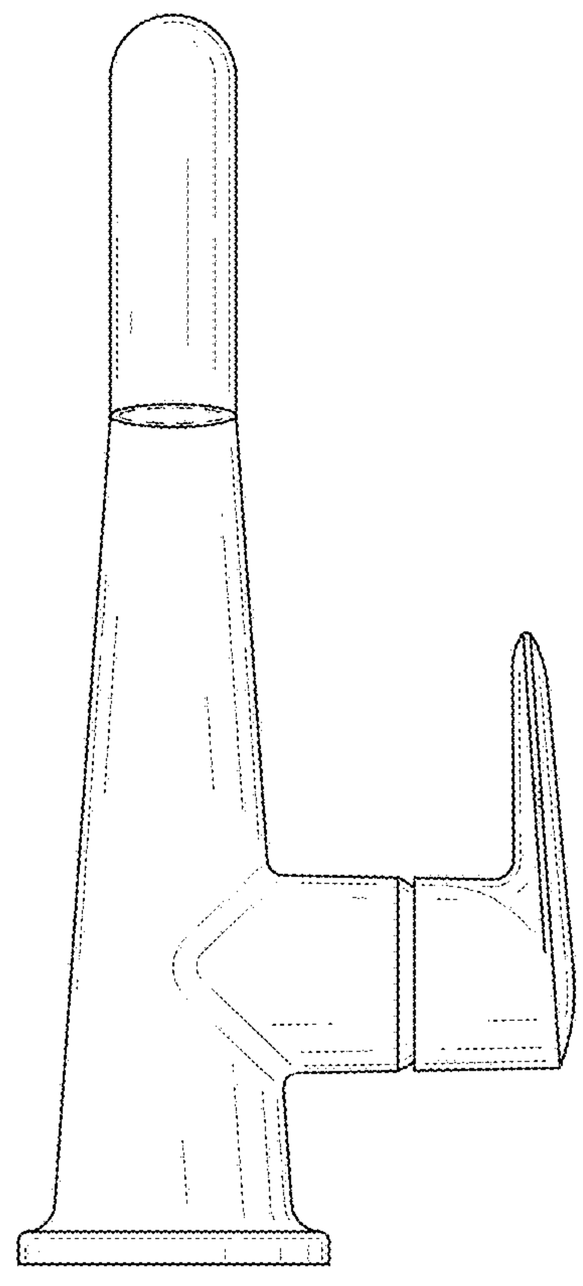

FIG.2

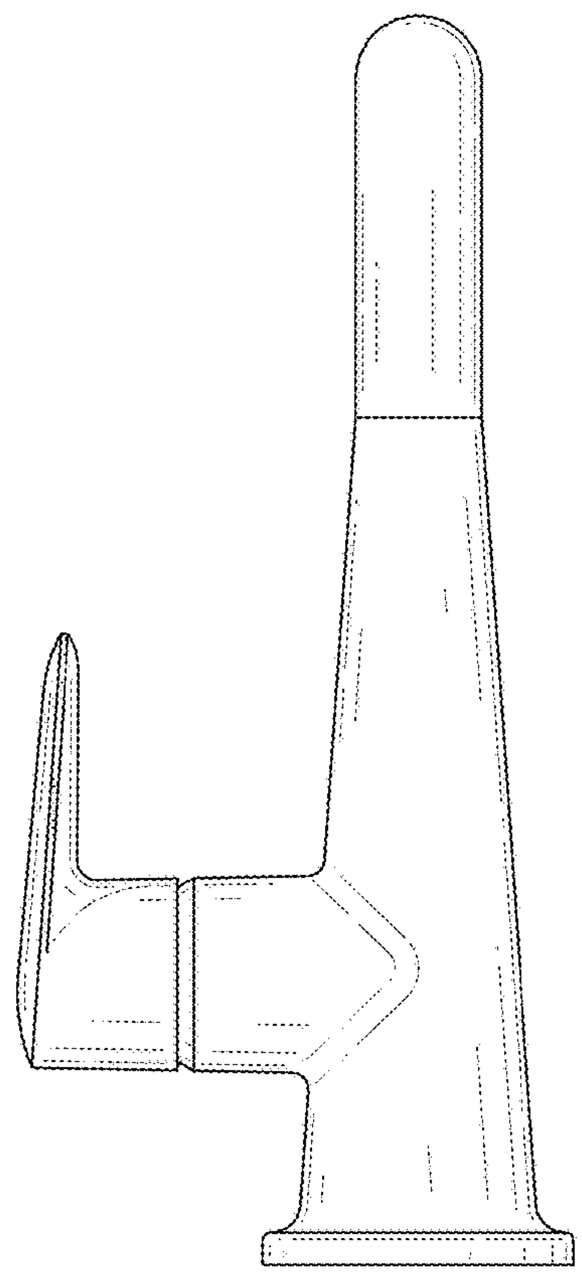

FIG.3

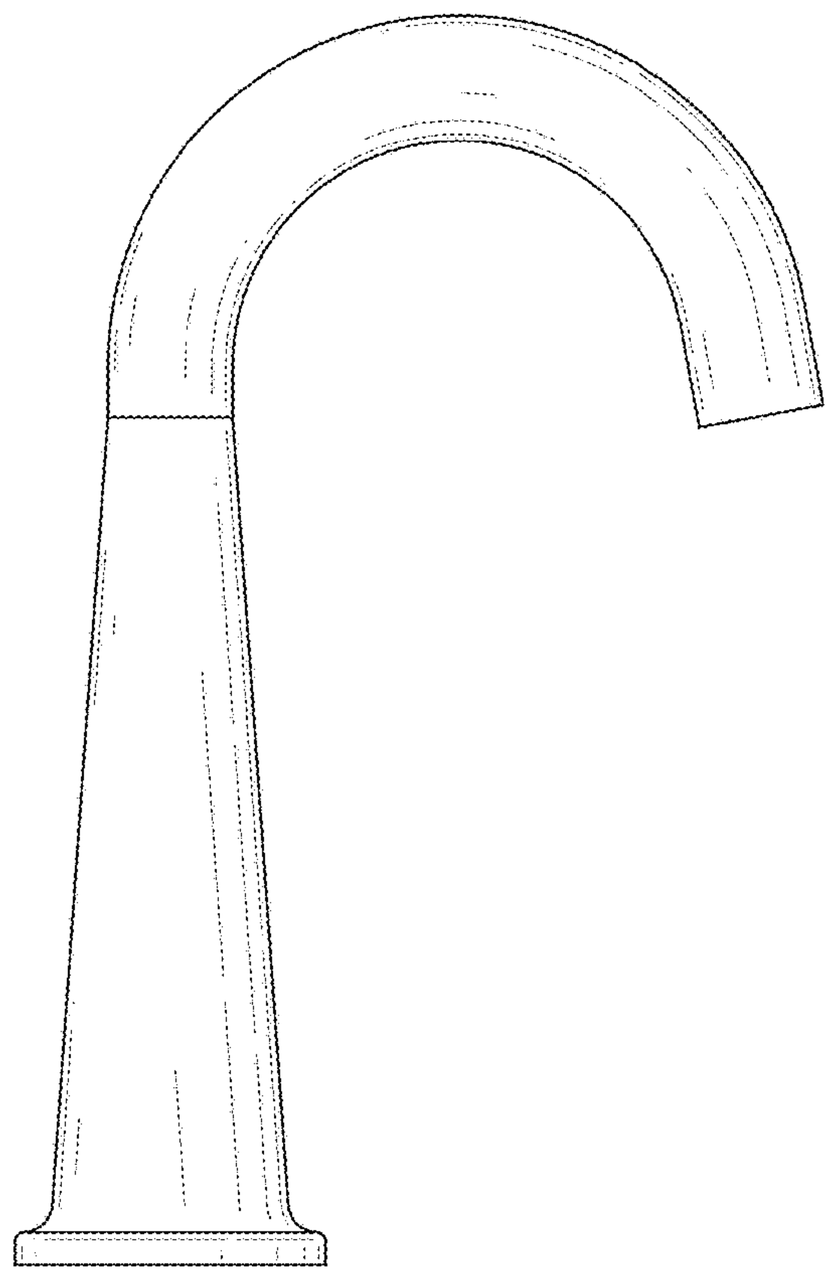

FIG.4

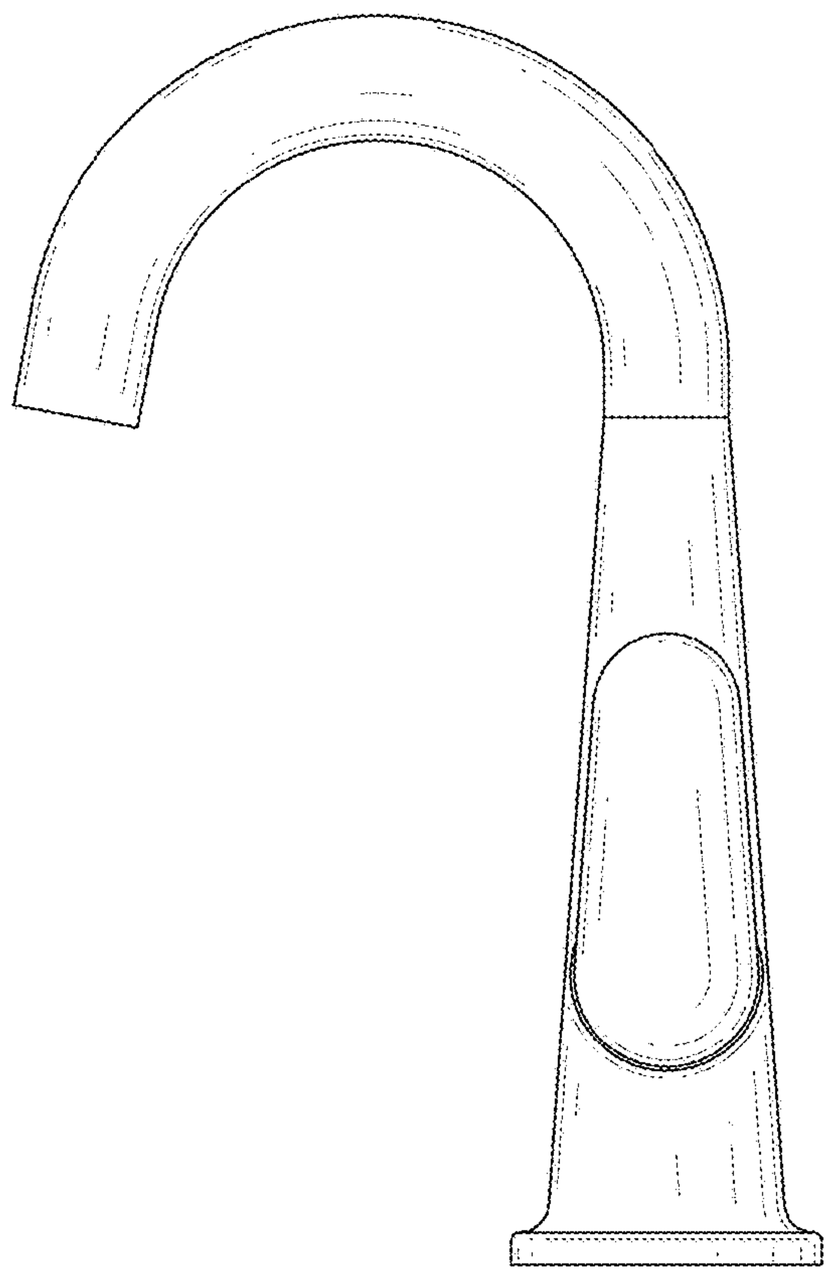

FIG.5

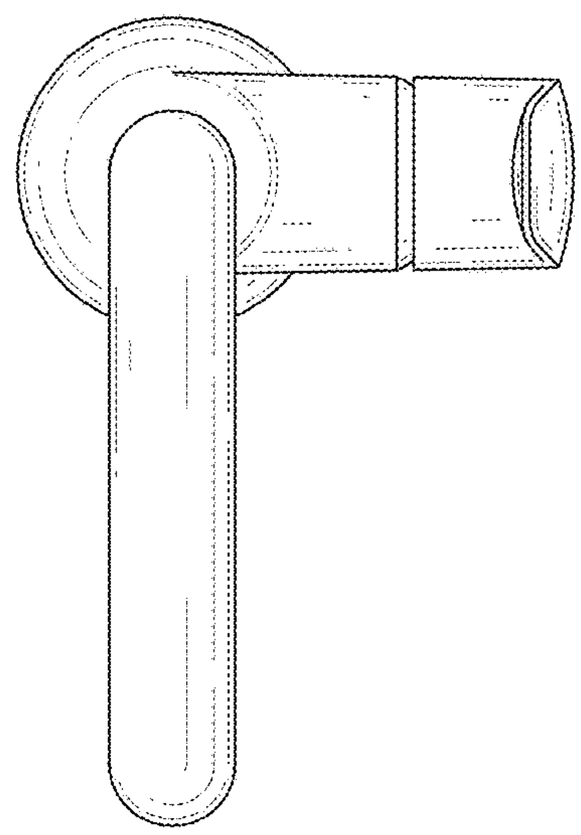

FIG.6

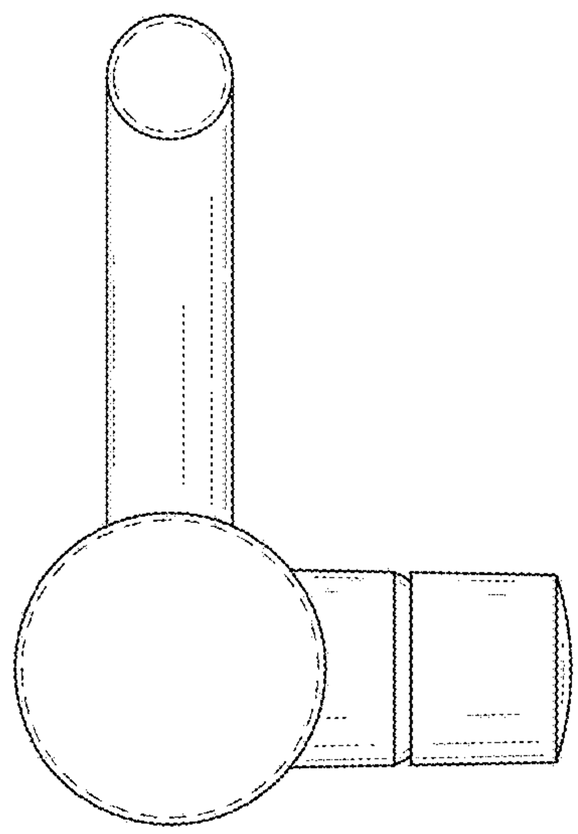

FIG.7