US00D860388S

(12) United States Design Patent

Slocum

(10) Patent No.: US D860,388 S
(45) Date of Patent: ** Sep. 17, 2019

(54) **POOL CHLORINATOR**

(71) Applicant: **WowJ LLC**, Scottsdale, AZ (US)

(72) Inventor: **Kathleen M. Slocum**, Scottsdale, AZ (US)

(**) Term: **15 Years**

(21) Appl. No.: **29/643,334**

(22) Filed: **Apr. 6, 2018**

(51) **LOC (12) Cl.** **23-01**

(52) **U.S. Cl.**
USPC **D23/208**; D23/207

(58) **Field of Classification Search**
USPC D23/207, 208, 209; D11/131, 133, 121, D11/160; D99/25; 210/167.11, 167.2, 210/167.1, 242.1
CPC C02F 1/688; E04H 4/1281; E04H 4/1263
See application file for complete search history.

(56) **References Cited**

U.S. PATENT DOCUMENTS

D439,543 S * 3/2001 Branaman D11/124
D462,292 S * 9/2002 Hanlon D11/124
D492,615 S * 7/2004 Sonntag D11/124
D559,943 S * 1/2008 Mercer D23/207
7,370,394 B1 * 5/2008 Juneau A01N 1/00 27/1
D657,438 S * 4/2012 Sparks D23/215
8,151,420 B2 * 4/2012 Randall E04H 13/001 27/1
D714,014 S * 9/2014 Miles, Sr. D99/5
D745,947 S * 12/2015 Finley D23/208
D757,211 S * 5/2016 Slocum D11/160
D830,225 S * 10/2018 Suchla D11/124

* cited by examiner

Primary Examiner — Robin V Webster
Assistant Examiner — Keith J Wilson
(74) *Attorney, Agent, or Firm* — Thomas W. Galvani, P.C.; Thomas W. Galvani

(57) **CLAIM**

The ornamental design for an ornamental pool chlorinator, as shown and described.

DESCRIPTION

FIG. **1** is a front perspective view of an ornamental pool chlorinator shown in accordance with my new design;
FIG. **2** is a rear perspective view of the ornamental pool chlorinator shown in FIG. **1**;
FIG. **3** is a front elevation view of the ornamental pool chlorinator shown in FIG. **1**;
FIG. **4** is a rear elevation view of the ornamental pool chlorinator shown in FIG. **1**;
FIG. **5** is a right side elevation view of the ornamental pool chlorinator shown in FIG. **1**;
FIG. **6** is a left side elevation view of the ornamental pool chlorinator shown in FIG. **1**;
FIG. **7** is a top plan view of the ornamental pool chlorinator shown in FIG. **1**; and,
FIG. **8** is a bottom plan view of the ornamental pool chlorinator shown in FIG. **1**.
The features shown in broken lines are for the purposes of showing environmental structure and form no part of the claimed design.

1 Claim, 8 Drawing Sheets

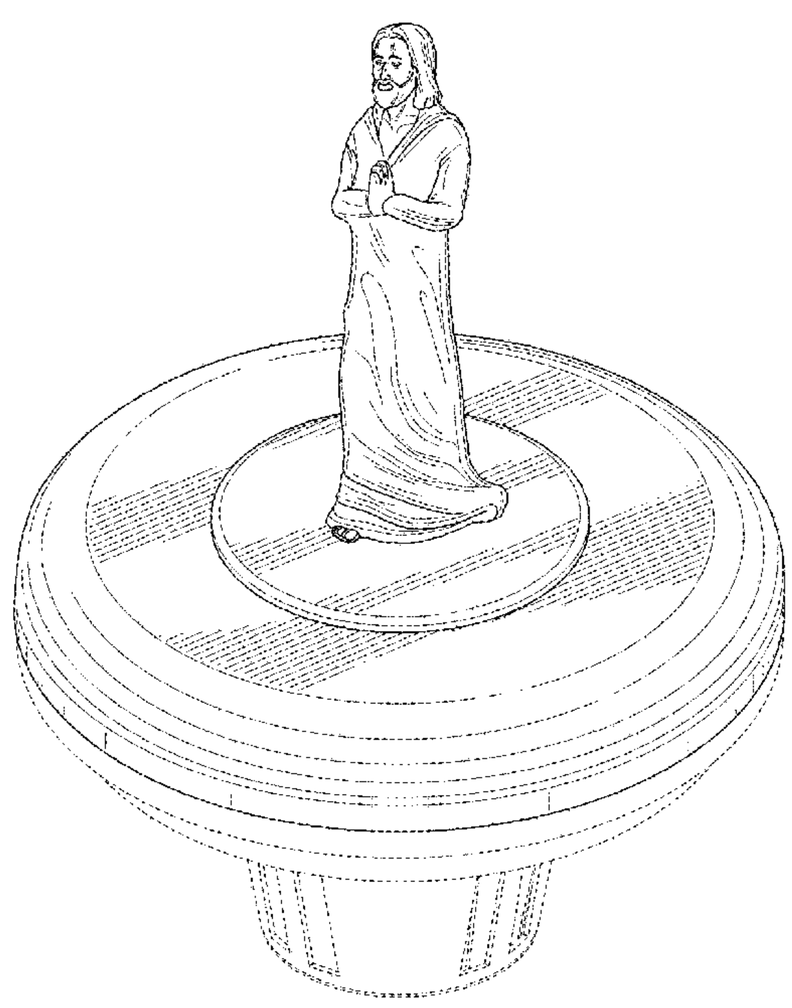

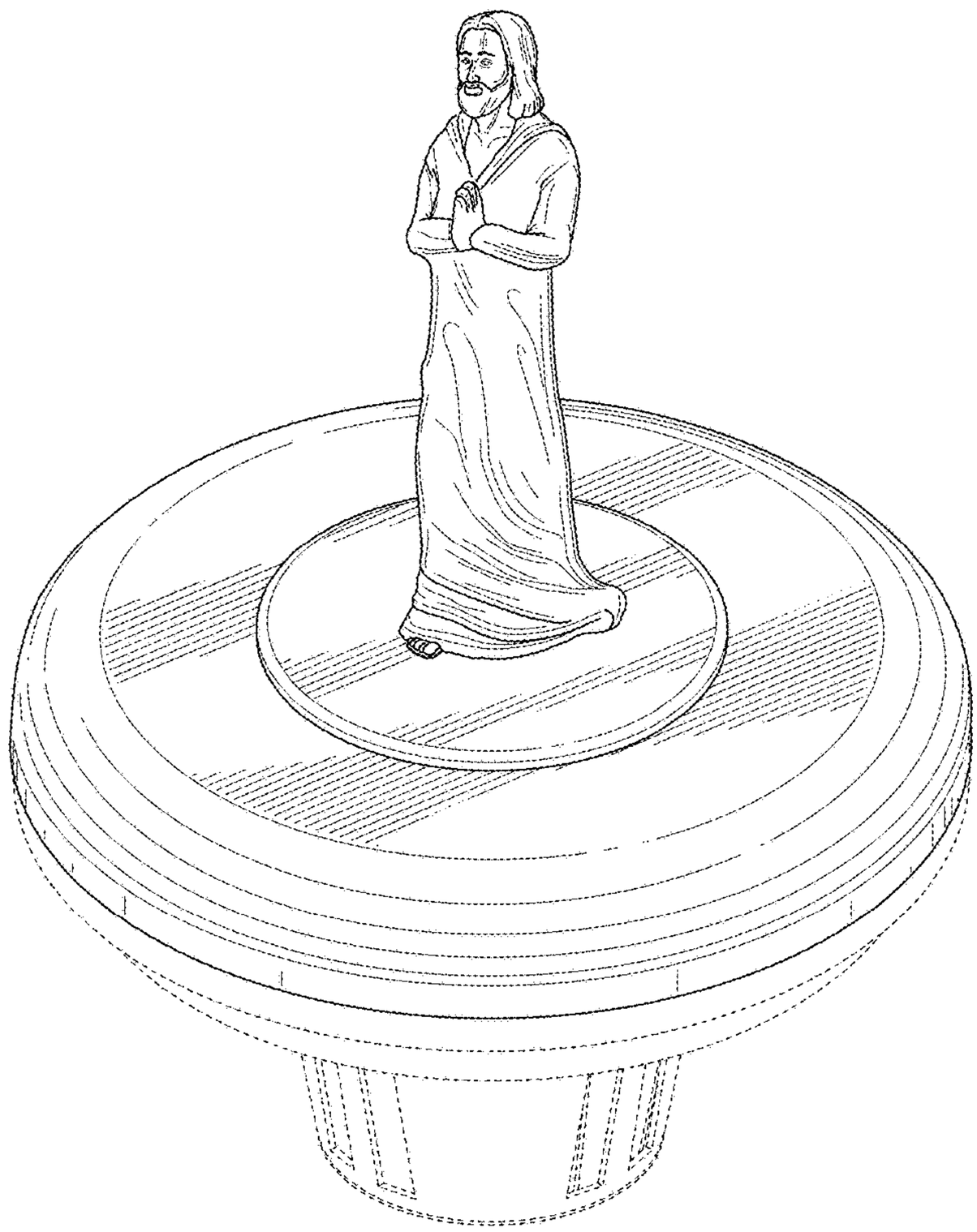

FIG. 1

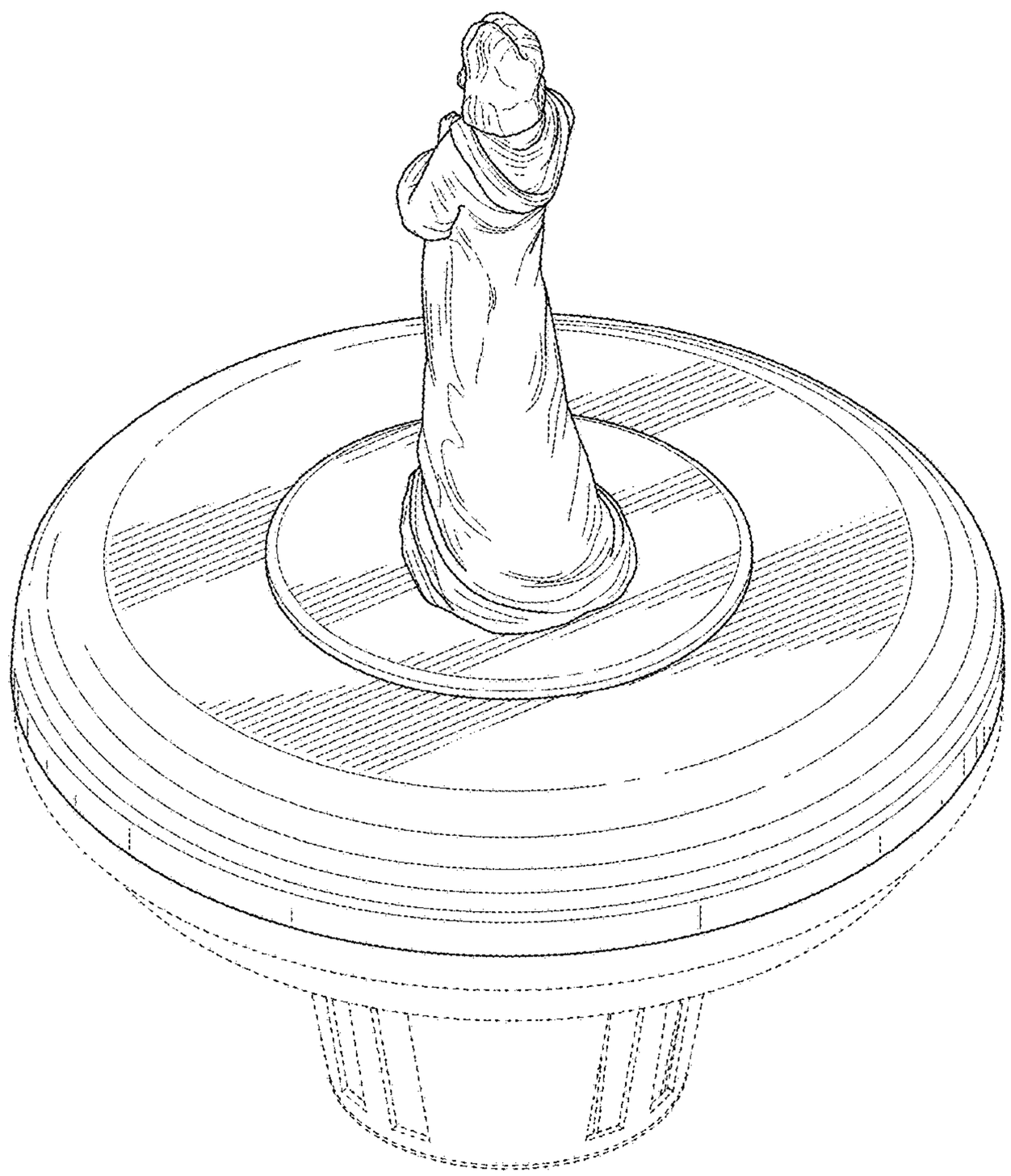

FIG. 2

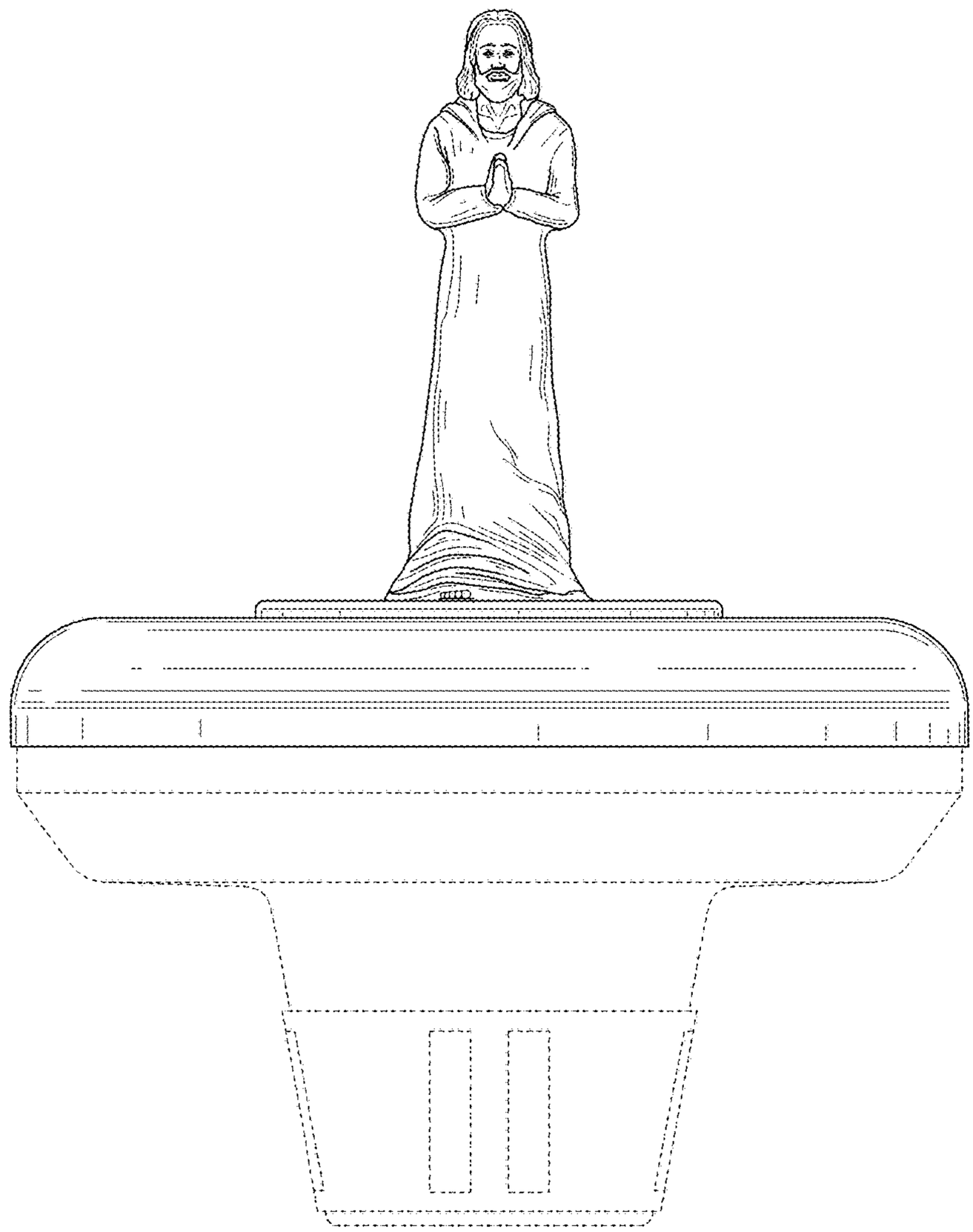

FIG. 3

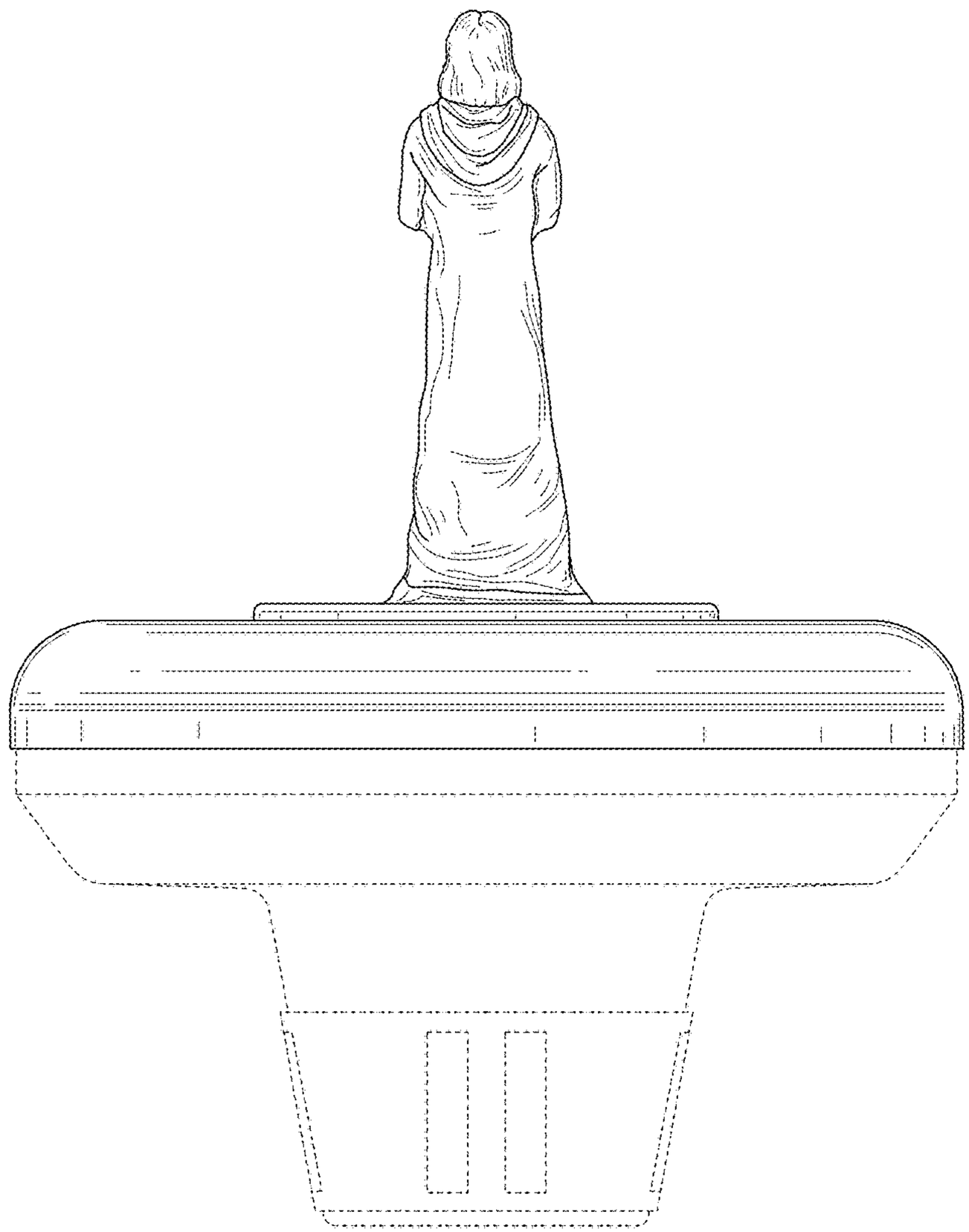

FIG. 4

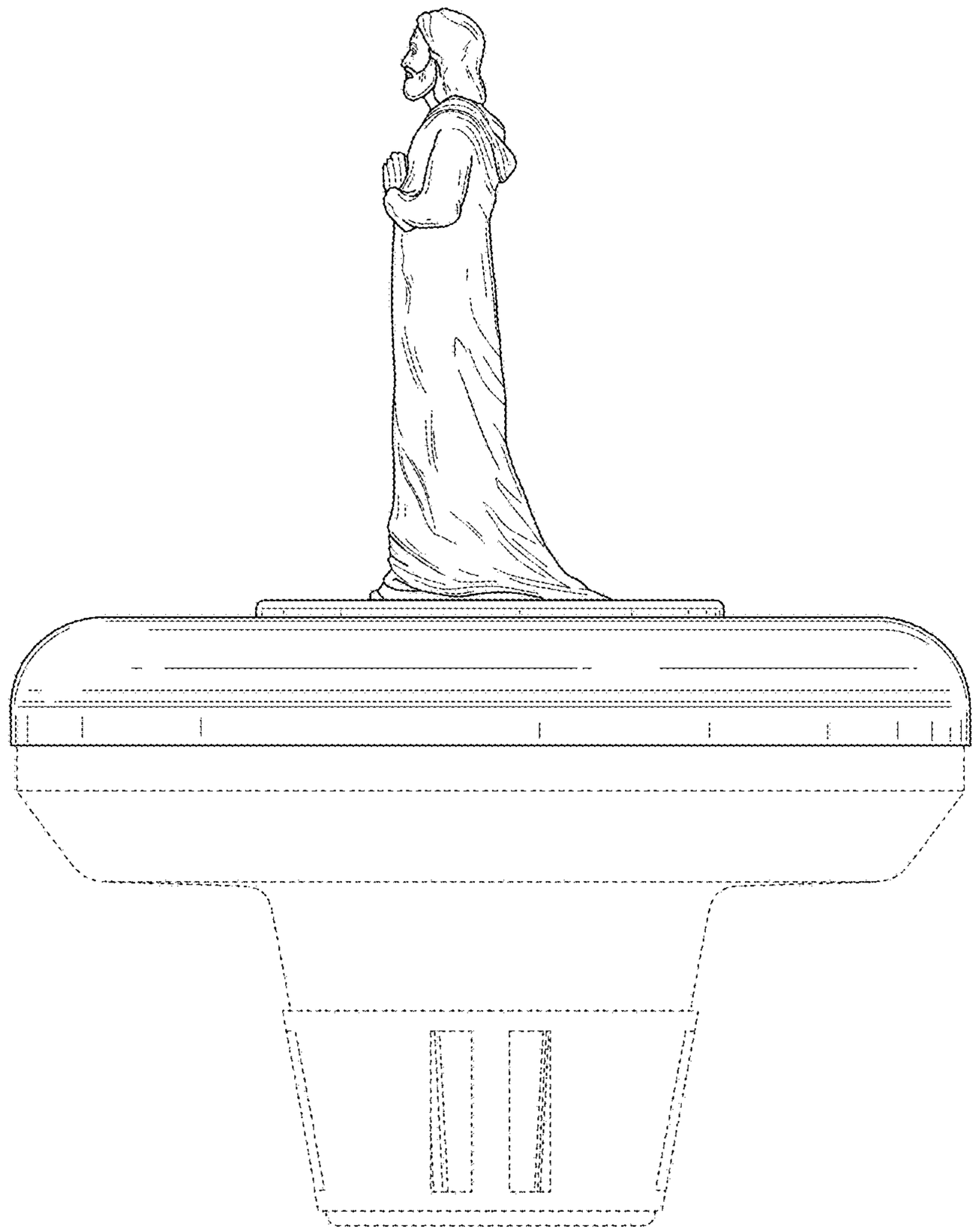

FIG. 5

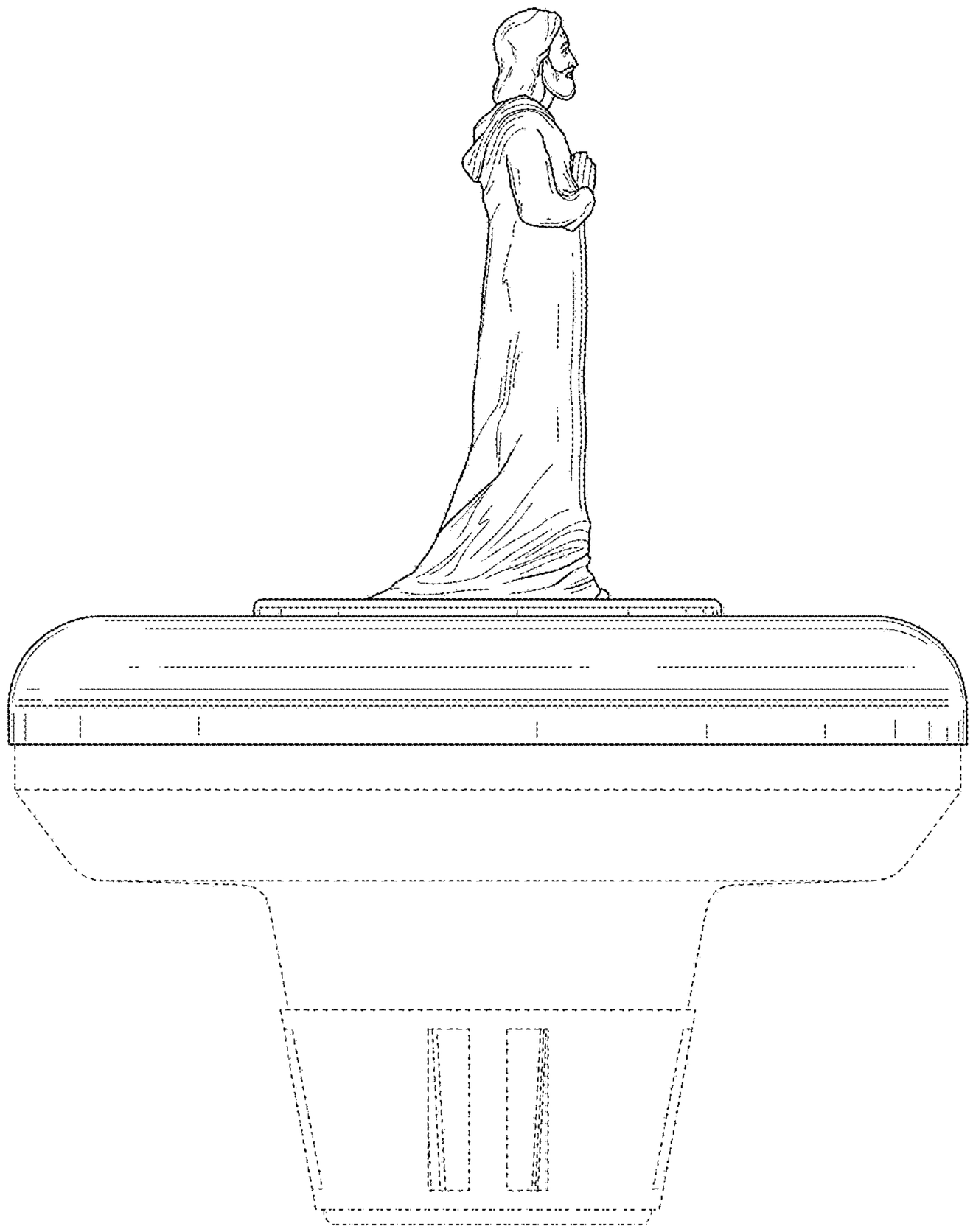

FIG. 6

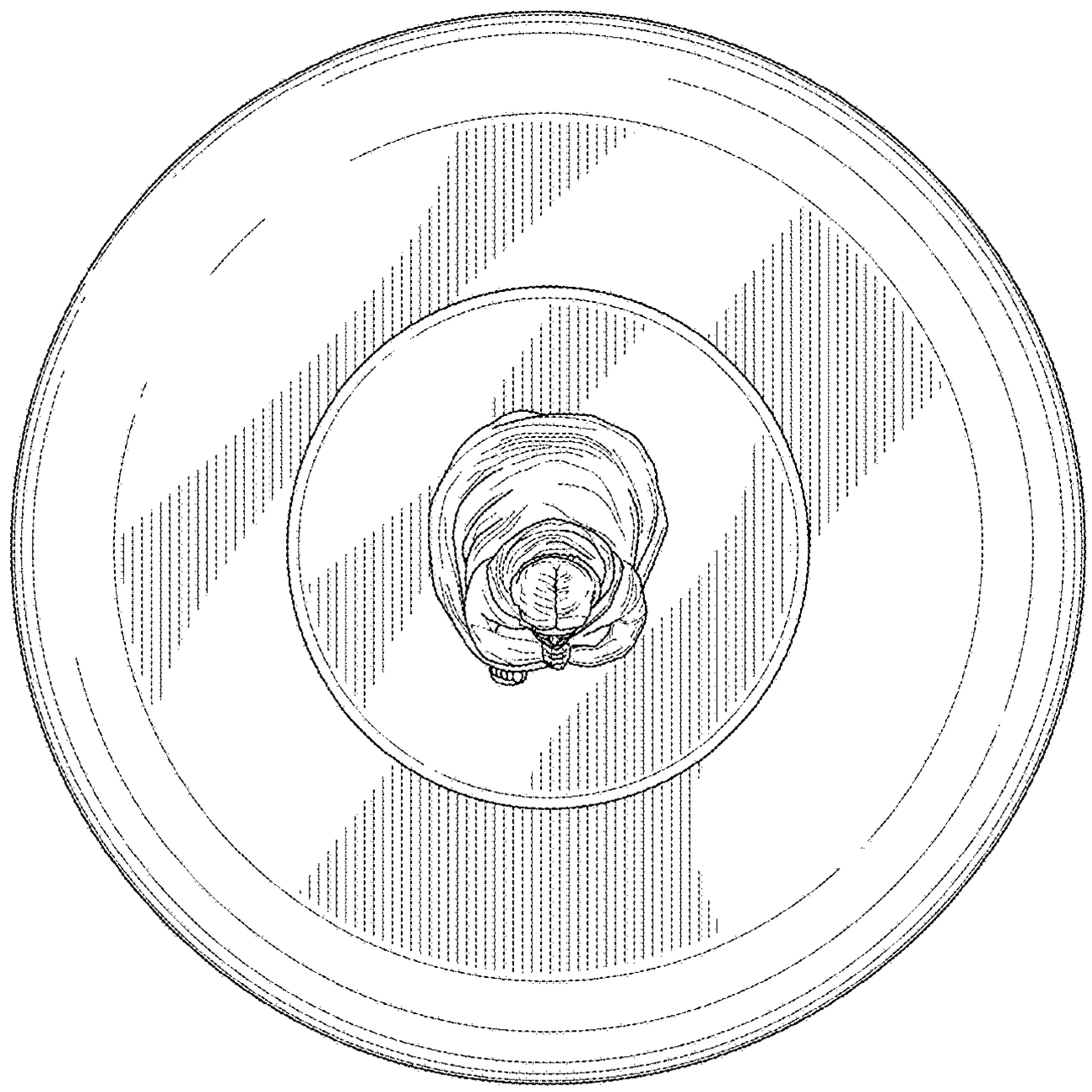

FIG. 7

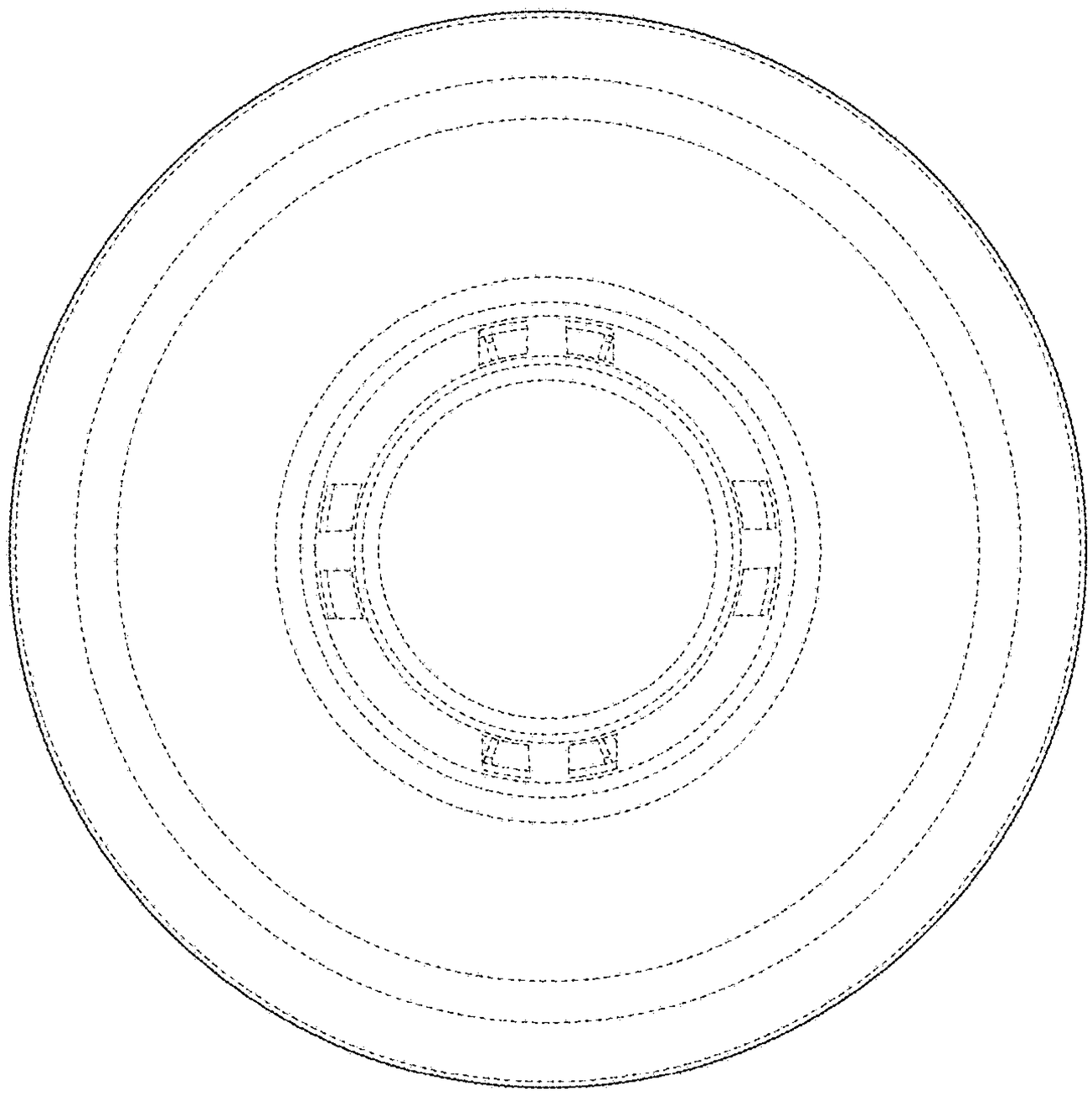

FIG. 8