US00D858872S

(12) United States Design Patent

White et al.

(10) Patent No.: US D858,872 S
(45) Date of Patent: ** Sep. 3, 2019

(54) **CASE FOR A VAPORIZER CARTRIDGE**

(71) Applicant: **PAX Labs, Inc.**, San Francisco, CA (US)

(72) Inventors: **Bryan White**, San Francisco, CA (US); **Steven Christensen**, San Francisco, CA (US); **Esteban L. Duque**, San Francisco, CA (US); **Alexander J. Gould**, San Francisco, CA (US)

(73) Assignee: **PAX Labs, Inc.**, San Francisco, CA (US)

(**) Term: **15 Years**

(21) Appl. No.: **29/573,632**

(22) Filed: **Aug. 8, 2016**

(51) **LOC (12) Cl.** **27-06**

(52) **U.S. Cl.**
USPC **D27/186**

(58) **Field of Classification Search**
USPC D27/100–196; D23/366; D13/103; D9/452, 453, 454, 457
CPC A24F 1/30; A24F 5/04; A24F 9/00; A24F 47/002; A24F 47/008; A24F 7/00; A61M 15/0021
See application file for complete search history.

(56) **References Cited**

U.S. PATENT DOCUMENTS

D301,837	S		6/1989	Peterson et al.	
D302,659	S		8/1989	Peterson et al.	
D303,722	S		9/1989	Marlow et al.	
D310,171	S		8/1990	Cusenza	
D336,346	S		6/1993	Miller et al.	
D367,605	S		3/1996	Moore	
D368,552	S		4/1996	Adams	
D371,633	S		7/1996	Chenard	
5,545,904	A		8/1996	Orbach	
D379,810	S		6/1997	Giordano et al.	
D382,146	S		8/1997	Sandy	
D397,504	S		8/1998	Zelenik	
D398,150	S		9/1998	Vonarburg	
D407,978	S	*	4/1999	Petro	D9/453
D411,332	S		6/1999	Zelenik	
D412,279	S		7/1999	Brice	
D422,884	S		4/2000	Lafond	
D424,236	S		5/2000	Reed	
D433,532	S		11/2000	Higgins et al.	
D465,731	S	*	11/2002	Brant	D9/453
D481,314	S	*	10/2003	Noonan	D9/438
D485,639	S		1/2004	Stronski	
D513,181	S	*	12/2005	Bloom	D9/453
D540,687	S		4/2007	Egawa	
D545,904	S		7/2007	Chen et al.	
D557,209	S		12/2007	Ahlgren et al.	
D558,060	S		12/2007	Sir	
D562,151	S		2/2008	Larocca et al.	
D569,727	S		5/2008	Moretti	
D571,556	S		6/2008	Raile	
D573,022	S	*	7/2008	Berman	D9/453
D573,474	S		7/2008	Beam et al.	
D574,240	S	*	8/2008	Szczesniak	D9/453
D577,150	S		9/2008	Bryman et al.	
D577,591	S		9/2008	Bouroullec et al.	
D584,149	S	*	1/2009	Lohrman	D9/453
D599,670	S		9/2009	Qin	
D606,864	S	*	12/2009	Robinson	D9/453
D611,409	S		3/2010	Green et al.	
D616,753	S		6/2010	Beam et al.	
D619,003	S	*	7/2010	Benoit-Gonin	D9/453
D632,958	S	*	2/2011	Fuchs	D9/453
D633,386	S	*	3/2011	Taber	D9/453
D634,200	S	*	3/2011	Taber	D9/453
7,905,236	B2		3/2011	Bryman et al.	
D645,817	S		9/2011	Sasada et al.	
D647,247	S		10/2011	Jones	
D649,708	S		11/2011	Oneil	
D649,932	S		12/2011	Symons	
D661,991	S		6/2012	Brummelhuis et al.	
D664,636	S		7/2012	Robinson et al.	
D670,272	S		11/2012	Suzuki	
D674,748	S		1/2013	Ferber et al.	
D679,999	S	*	4/2013	Miceli	D9/441
D680,000	S	*	4/2013	Miceli	D9/441
D681,465	S	*	5/2013	Cox	D9/441
D681,466	S	*	5/2013	Cox	D9/441
D682,698	S		5/2013	Young	
D684,683	S		6/2013	Curti et al.	
D686,987	S		7/2013	Vanstone et al.	
D687,299	S	*	8/2013	Peykoff	D9/453
D688,128	S	*	8/2013	Krause	B65D 41/0414 D9/453
D693,221	S	*	11/2013	Ramsey	D9/453
D693,684	S	*	11/2013	Ramsey	D9/453
D693,685	S	*	11/2013	Ramsey	D9/453

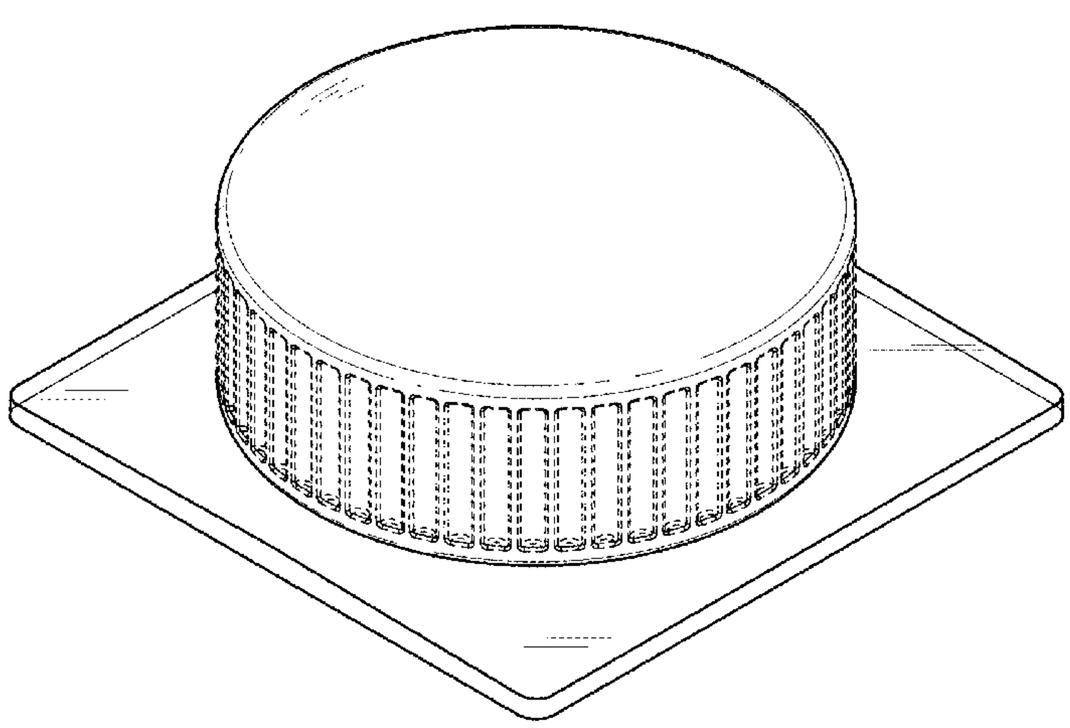

D694,109	S	*	11/2013	Tanner	D9/447
D694,110	S	*	11/2013	Tanner	D9/452
D700,572	S		3/2014	Esses	
D704,629	S		5/2014	Liu	
D704,634	S		5/2014	Eidelman et al.	
D705,918	S		5/2014	Robinson et al.	
D708,727	S		7/2014	Postma	
D709,766	S	*	7/2014	Miceli	D9/453
D714,147	S	*	9/2014	Lindstrom, Sr.	D9/453
8,881,738	B2		11/2014	Bryman	
D720,095	S		12/2014	Alima	
D720,496	S		12/2014	Alima	
D720,497	S		12/2014	Alima	
D721,202	S		1/2015	Liu	
D721,972	S		2/2015	Brewer et al.	
D723,919	S	*	3/2015	Taber	D9/438
D725,310	S		3/2015	Eksouzian	
9,010,335	B1		4/2015	Scatterday	
D728,855	S		5/2015	Liu	
D729,444	S		5/2015	Leidel	
D729,445	S		5/2015	Leidel	
D730,572	S		5/2015	Leidel	
D731,114	S		6/2015	Leidel	
D733,356	S		6/2015	Leidel	
D738,038	S		9/2015	Smith	
D739,973	S		9/2015	Chao	
9,167,849	B2		10/2015	Adamic	
D742,492	S		11/2015	Robinson et al.	
D743,099	S		11/2015	Oglesby	
D744,342	S		12/2015	Blasko et al.	
D744,419	S		12/2015	Bowen et al.	
D756,776	S	*	5/2016	Orset	D9/452
D756,790	S	*	5/2016	Henriksson	D9/504
D757,352	S		5/2016	Bagai	
D757,353	S		5/2016	Nunnelly et al.	
D757,545	S	*	5/2016	King	D9/453
D759,303	S		6/2016	Afridi	
D762,003	S		7/2016	Lomeli	
D763,691	S	*	8/2016	Marantis	D9/434
9,408,416	B2		8/2016	Monsees et al.	
D768,920	S		10/2016	Jones et al.	
D789,201	S	*	6/2017	Yu	D9/453
D792,219	S	*	7/2017	Bueno Nunez	D9/453
D797,557	S	*	9/2017	Ziccardi	D9/443
D804,306	S	*	12/2017	Simons	D9/454
D805,900	S	*	12/2017	Kapolas	D9/453
2002/0088469	A1		7/2002	Rennecamp	
2006/0191546	A1		8/2006	Takano et al.	
2007/0045320	A1	*	3/2007	Biesecker	B65D 50/041 220/345.1
2007/0089757	A1		4/2007	Bryman	
2010/0163063	A1		7/2010	Fernando et al.	
2011/0017741	A1	*	1/2011	Sprishen	B65D 41/045 220/288
2013/0001185	A1	*	1/2013	Antier	B65D 41/3442 215/252
2014/0014124	A1		1/2014	Glasberg et al.	
2014/0107815	A1		4/2014	Lamothe	
2014/0158660	A1	*	6/2014	Wood	B65D 41/0421 215/252
2014/0161301	A1		6/2014	Merenda	
2014/0178461	A1		6/2014	Rigas	
2015/0245654	A1		9/2015	Memari et al.	
2015/0245655	A1		9/2015	Memari et al.	
2015/0245657	A1		9/2015	Memari et al.	
2015/0245665	A1		9/2015	Memari et al.	
2015/0245666	A1		9/2015	Memari et al.	
2015/0245667	A1		9/2015	Memari et al.	
2015/0245668	A1		9/2015	Memari et al.	
2015/0282526	A1		10/2015	Wu	
2015/0305409	A1		10/2015	Verleur et al.	
2015/0313283	A1		11/2015	Collett et al.	
2015/0313287	A1		11/2015	Verleur et al.	
2015/0320116	A1		11/2015	Bleloch et al.	
2015/0351455	A1		12/2015	Liu	
2015/0357608	A1		12/2015	Huang	
2016/0332783	A1	*	11/2016	Kim	B65D 41/34

OTHER PUBLICATIONS

Pax Pods—Prisim by Pax Labs. dated 2018. found online [Sep. 24, 2018] http://pyramidpens.com/products/pax-pods-prism/.*

Electronic Vaporization Device / Gizmodo Pax 2 Vaporizer / Gizmodo; posted at Gizmodo.com, posting date Jul. 23, 2015 © gizmodo.com, (online); retrived from the internet: (http://gizmodo.com/pax-2-vaporizer-reviews-its-like-smoking-in-the-future-1718310779); on Oct. 17, 2016.

FC Vaporizer Review Forum; Pax Vaporizer by Ploom; retrieved from: http://fuckcombustion.com/threads/pax-vaporizer-by-ploom.6223/; p. 2 & 11 (2 pgs.); retrieval/print date: Nov. 16, 2015.

VapeWorld; Original Pax Vaporizers for Portable and Home Use; retrieved from: http://www.vapeworld.com/pax-vaporizer-by-ploom?gclid=CPCi1PKojskCFU06gQodPr ; 9 pgs.; retrieval/print date: Nov. 13, 2015.

Pax Labs, Inc.; JUUL product information © 2016; retrieved from https://www.juulvapor.com/shop-juul/; 6 pgs.; retrieval/print date: Mar. 9, 2016.

Pax by Ploom Vaporizer—YouTube front view; 2minutes 13 secs; 6 pages; retrieved Sep. 8, 2016 from the internet (http://www.youtube.com/watch?v=Jm06zW3-cxQ>); Aug. 14, 2013.

Pax by Ploom Vaporizer—YouTube Top Side View; 15 secs; 6 pages; retrieved Sep. 8, 2016 from the internet (http://www.youtube.com/watch?v=Jm06zW3-cxQ>); Aug. 14, 2013.

Pax by Ploom Vaporizer—YouTube Bottom View; 4 Mins 18 secs; 6 pages; retrieved Sep. 8, 2016 from the internet (http://www.youtube.com/watch?v=Jm06zW3-cxQ>); Aug. 14, 2013.

Pax by Ploom Vaporizer—YouTube Back Detail View; 25 secs; 6 pages; retrieved Sep. 8, 2016 from the internet (http://www.youtube.com/watch?v=Jm06zW3-cxQ>); Aug. 14, 2013.

Monsees et al.; Design U.S. Appl. No. 29/537,866 entitled "Electronic Vaporization Device", filed Aug. 28, 2015.

Bowen et al.; Design U.S. Appl. No. 29/499,016 entitled "Electronic Vaporization Device", filed Aug. 11, 2014.

Bowen et al.; Design U.S. Appl. No. 29/499,018 entitled "Electronic Vaporization Device With Cartridge", filed Aug. 11, 2014.

Bowen et al.; Design U.S. Appl. No. 29/499,021 entitled "Cartridge for Electronic Vaporization Device", filed Aug. 11, 2014.

Bowen et al.; Design U.S. Appl. No. 29/542,362 entitled "Electronic Vaporization Device With Cartridge", filed Oct. 13, 2015.

Lomeli; Design U.S. Appl. No. 29/561,205 entitled "Electronic vaporization device," filed Apr. 14, 2016.

Leon; Design U.S. Appl. No. 29/568,343 entitled "Vaporization cartridge device," filed Jun. 16, 2016.

Lomeli; Design U.S. Appl. No. 29/569,097 entitled "Vaporizer tamp," filed Jun. 23, 2016.

Lomeli; Design U.S. Appl. No. 29/569,109 entitled "Vaporized device charging cable," filed Jun. 23, 2016.

Lomeli; Design U.S. Appl. No. 29/569,118 entitled "Lid for a vaporizer device," filed Jun. 23, 2016.

Gould; Design U.S. Appl. No. 29/572,802 entitled "Cover for vaporizer device," filed Jul. 29, 2016.

* cited by examiner

Primary Examiner — Marissa J Cash

(74) *Attorney, Agent, or Firm* — Mintz Levin Cohn Ferris Glovsky and Popeo, P.C.

(57) **CLAIM**

The ornamental design for a case for a vaporizer cartridge, as shown and described.

DESCRIPTION

FIG. **1** is a top isometric view of a case for a vaporizer cartridge showing our design;

FIG. **2** is a bottom isometric view thereof;

FIG. **3** is a top view thereof;

FIG. **4** is a bottom view thereof;
FIG. **5** is a front view thereof;—The back view thereof is identical to the front view of FIG. **5** and is therefore omitted;
FIG. **6** is a right side view thereof; The left side view thereof is identical to the right side view of FIG. **6** and is therefore omitted;
FIG. **7** is a partially exploded view thereof; and
FIG. **8** is a second partially exploded view thereof.
FIG. **9** is a top isometric view of another embodiment of a case for a vaporizer cartridge;
FIG. **10** is a top view thereof;
FIG. **11** is a bottom view thereof;
FIG. **12** is a front view thereof;-The back view thereof is identical to the front view of FIG. **12** and is therefore omitted;
FIG. **13** is a right side view thereof;—The left side view thereof is identical to the right side view of FIG. **13** and is therefore omitted;
FIG. **14** is a partially exploded view thereof;
FIGS. **15**, **16**, **17**, and **18** each show alternative embodiments of the bottom view thereof, in which the different variations show transparent windows through the bottom of the case for a vaporizer cartridge having different shapes and sizes;
FIG. **19** is a top isometric view of another embodiment of a case for a vaporizer cartridge showing our design;
FIG. **20** is a top view thereof;
FIG. **21** is a bottom view thereof;
FIG. **22** is a front view thereof; The back view thereof-is identical to the front view of FIG. **22** and is therefore omitted;
FIG. **23** is a right side view thereof; The left side view thereof-is identical to the right side view of FIG. **23** and is therefore omitted; and,
FIG. **24** is a partially exploded view thereof.
The broken lines show portions of the case for a vaporizer cartridge that form no part of the claimed design.

1 Claim, 16 Drawing Sheets

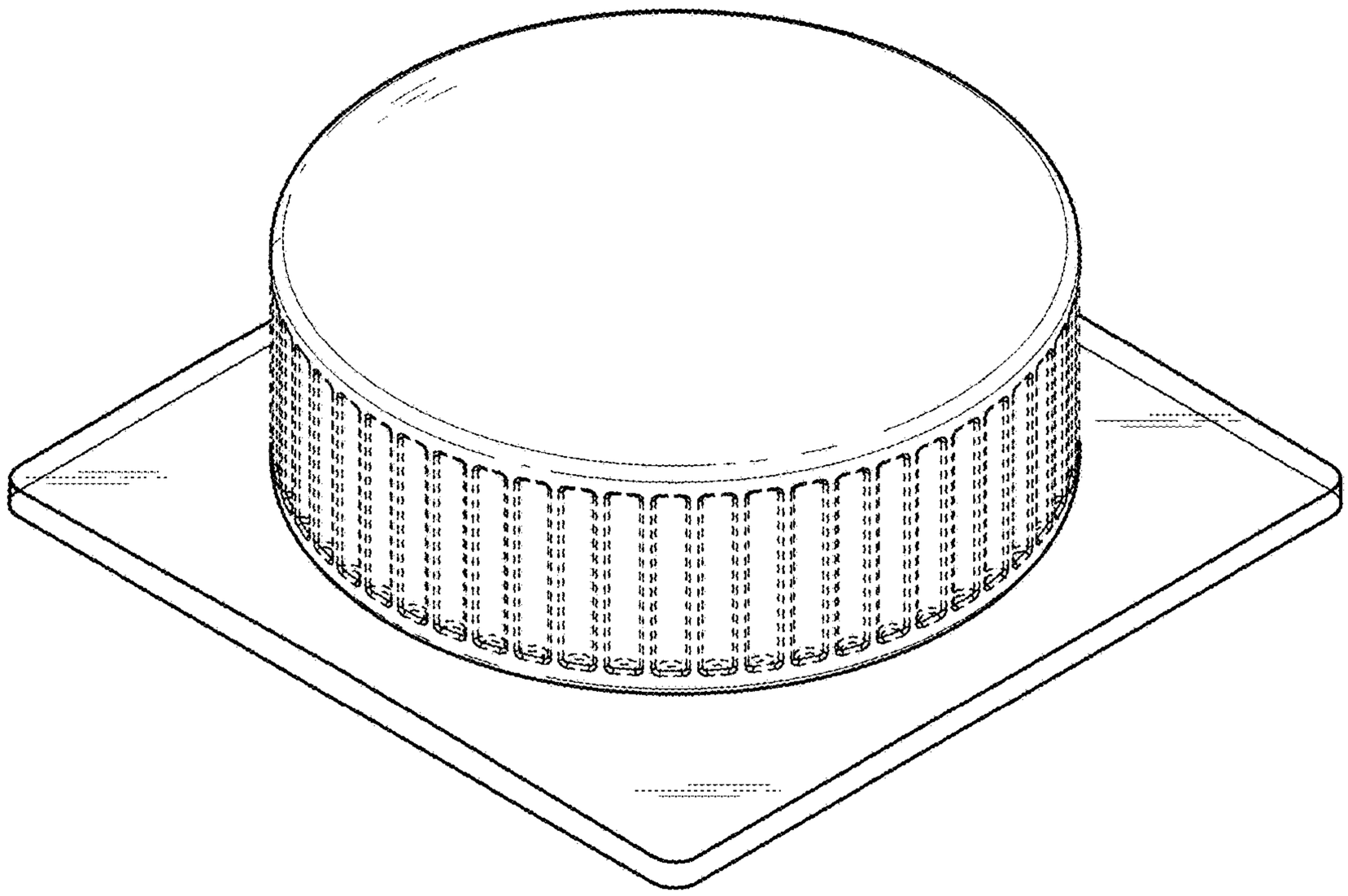

FIG. 1

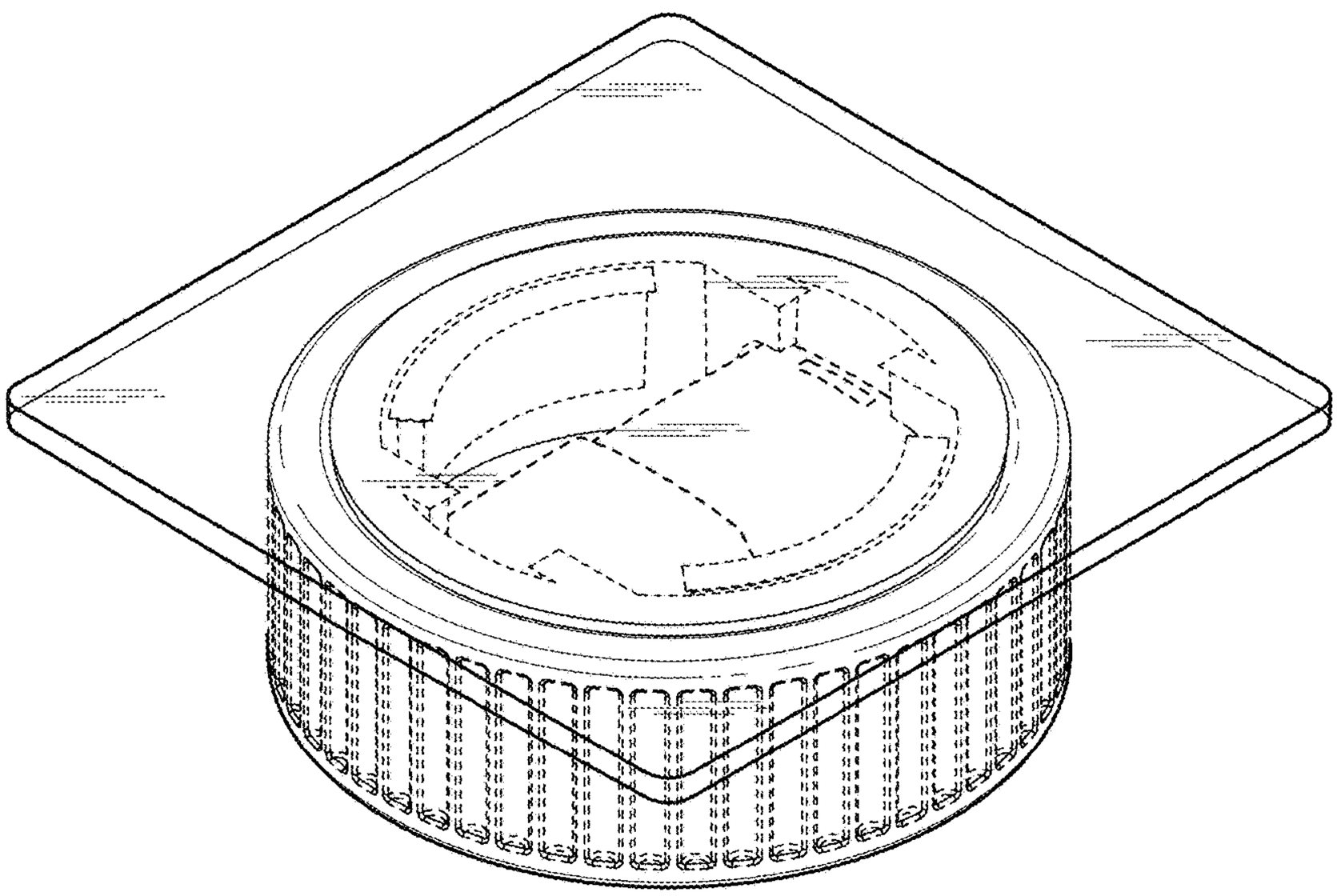

FIG. 2

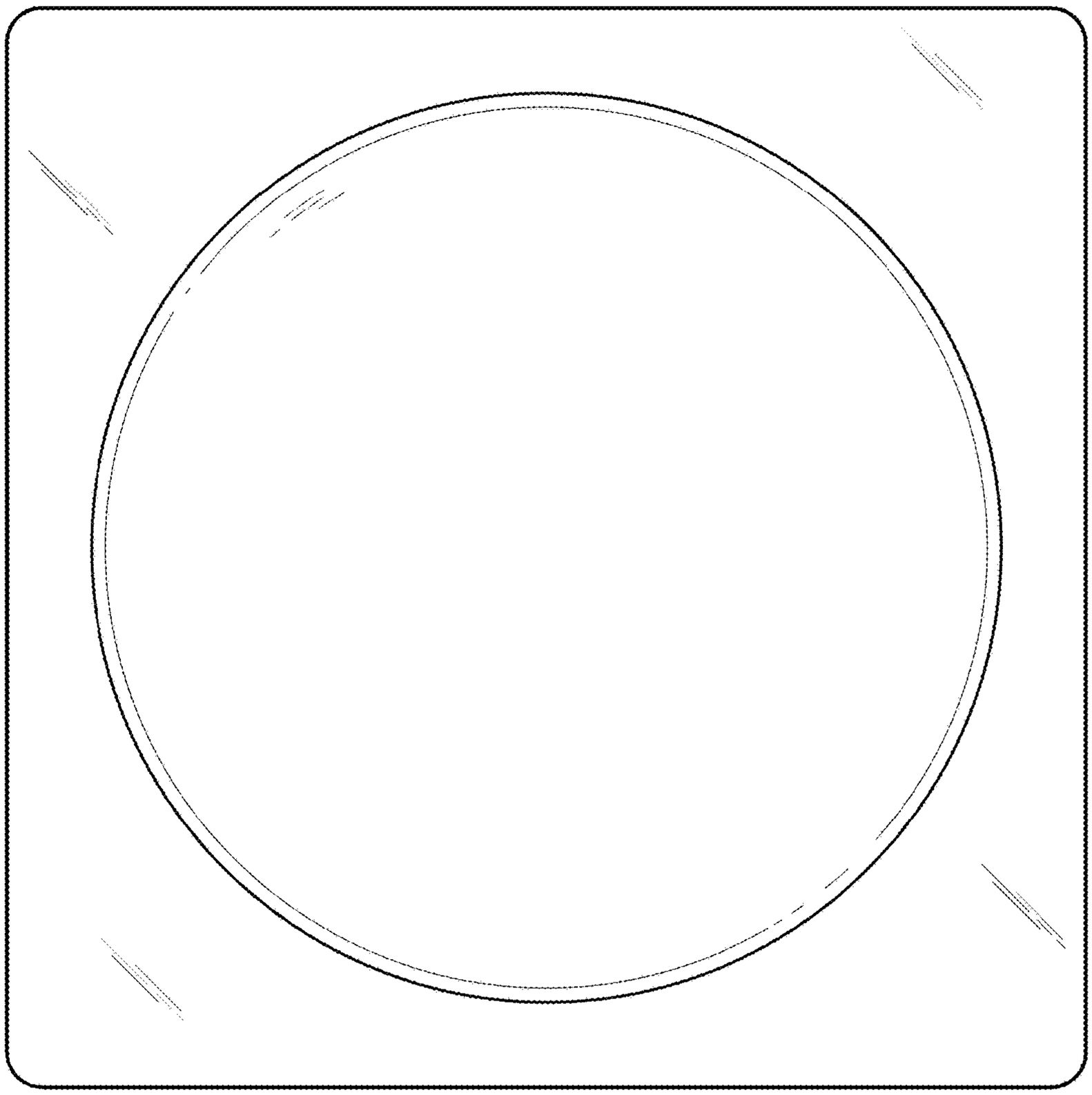

FIG. 3

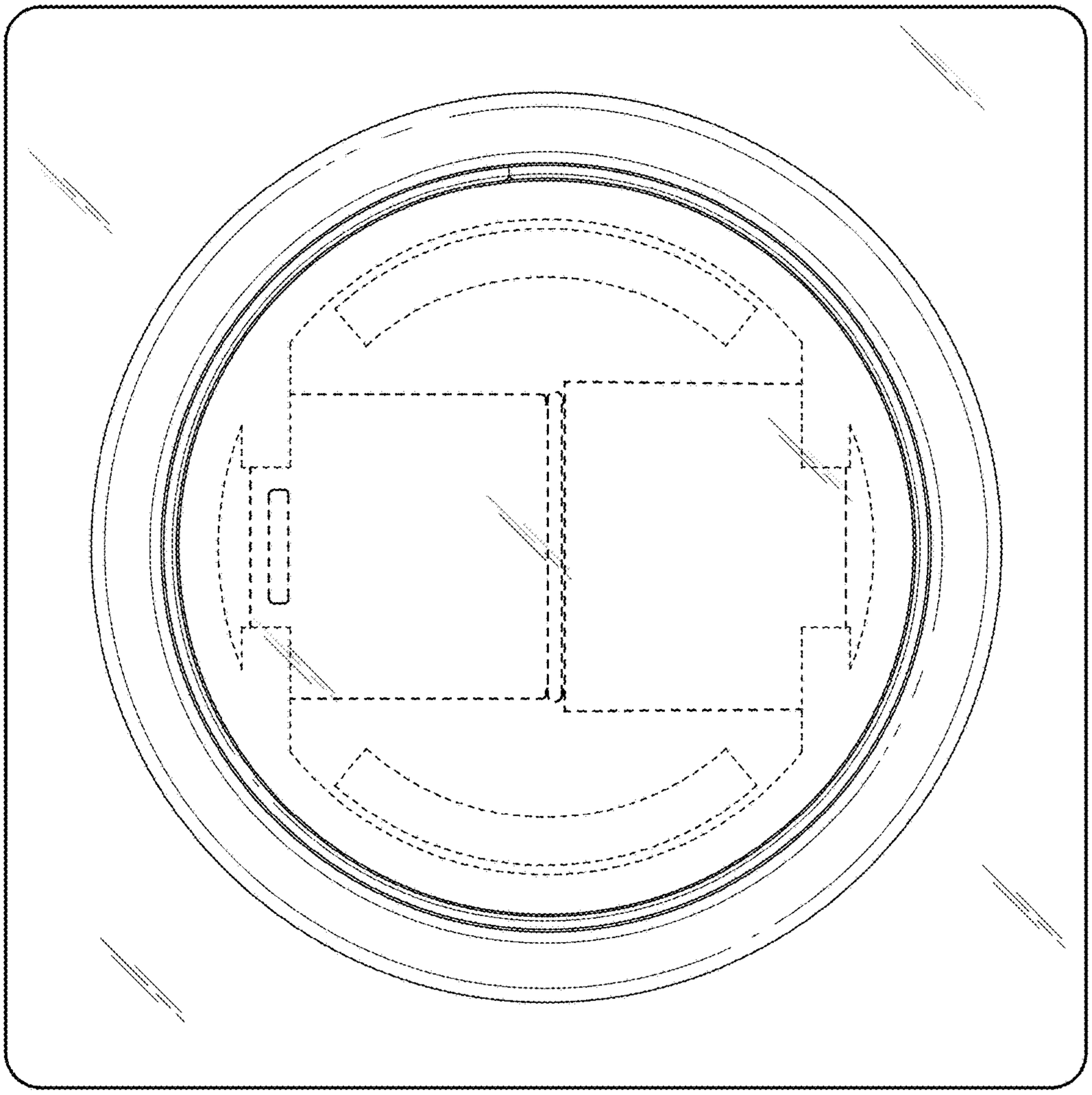

FIG. 4

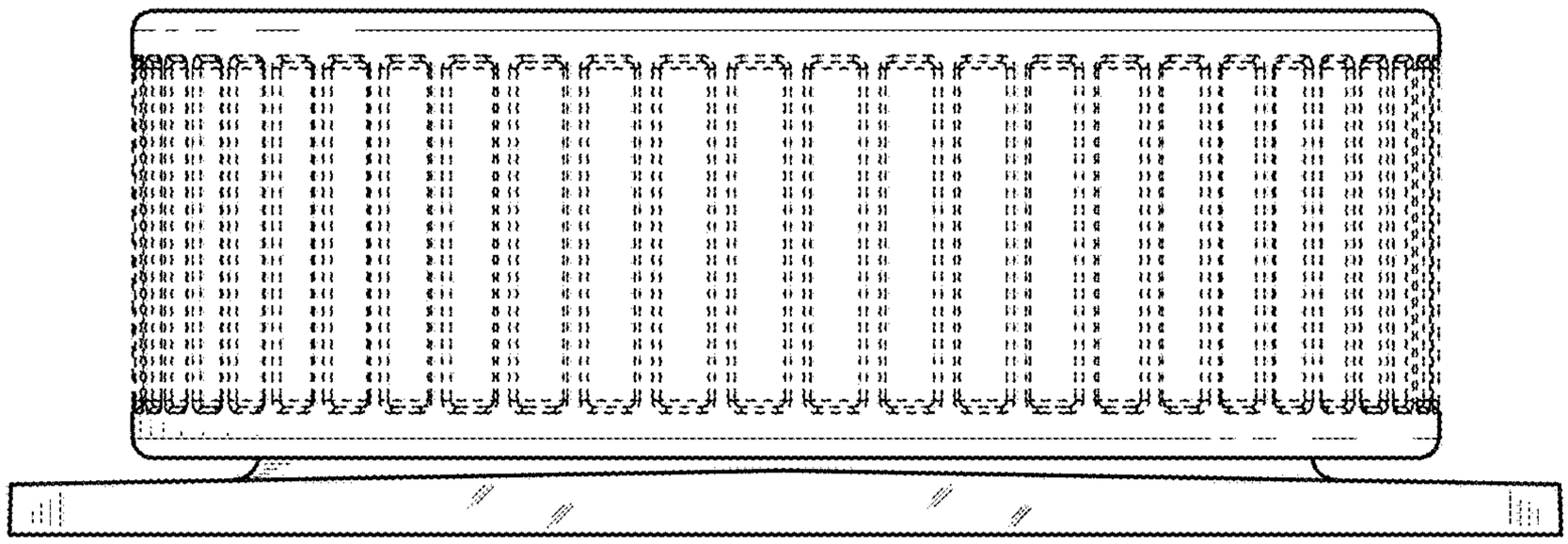

FIG. 5

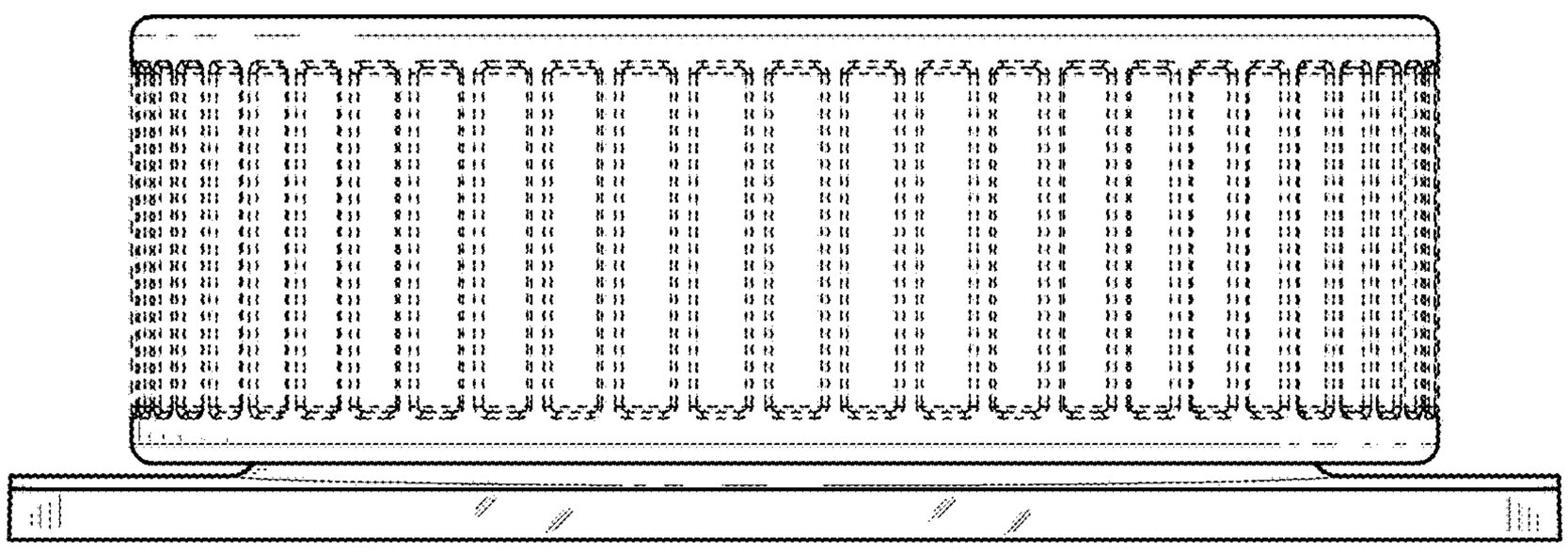

FIG. 6

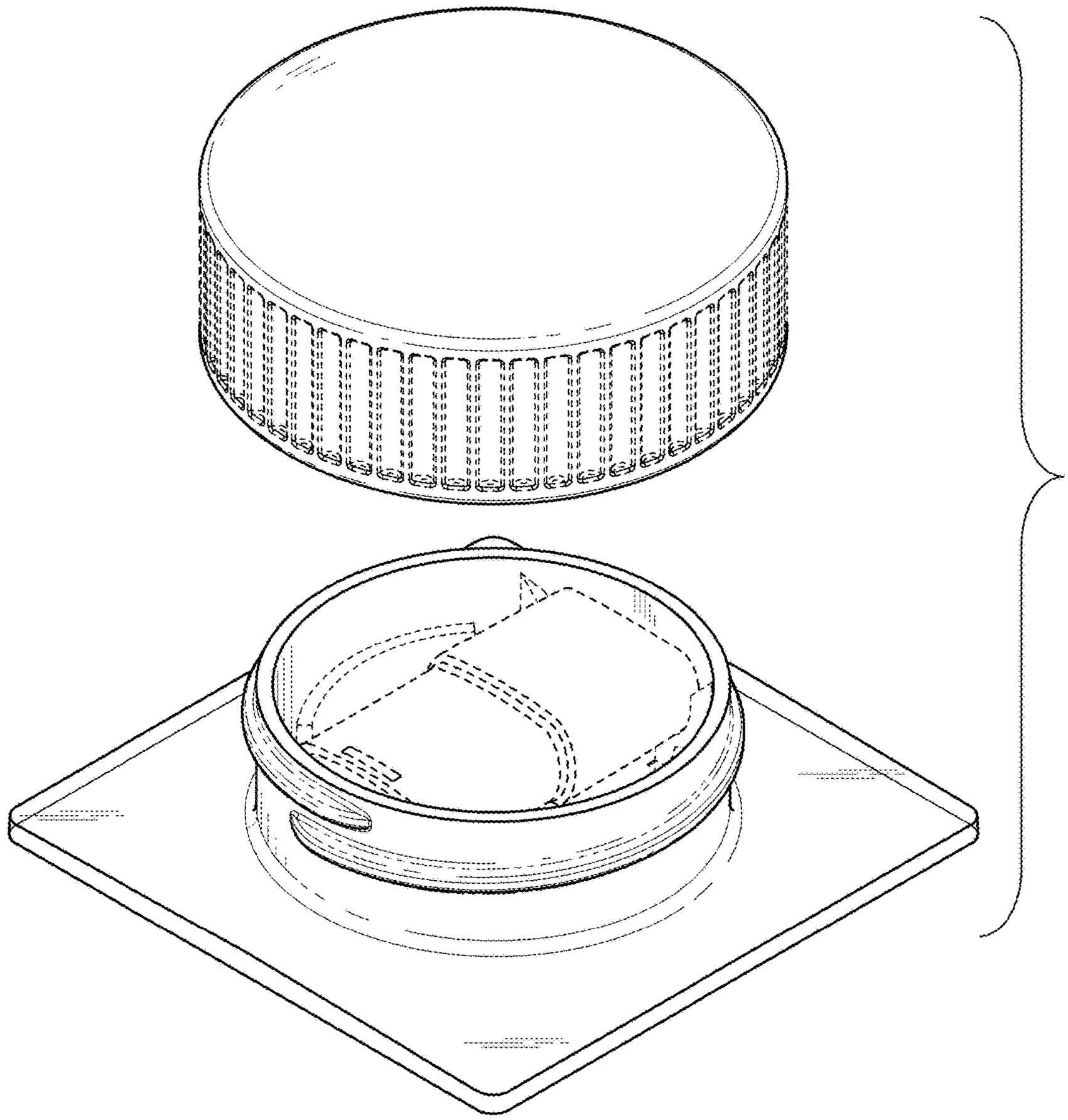

FIG. 7

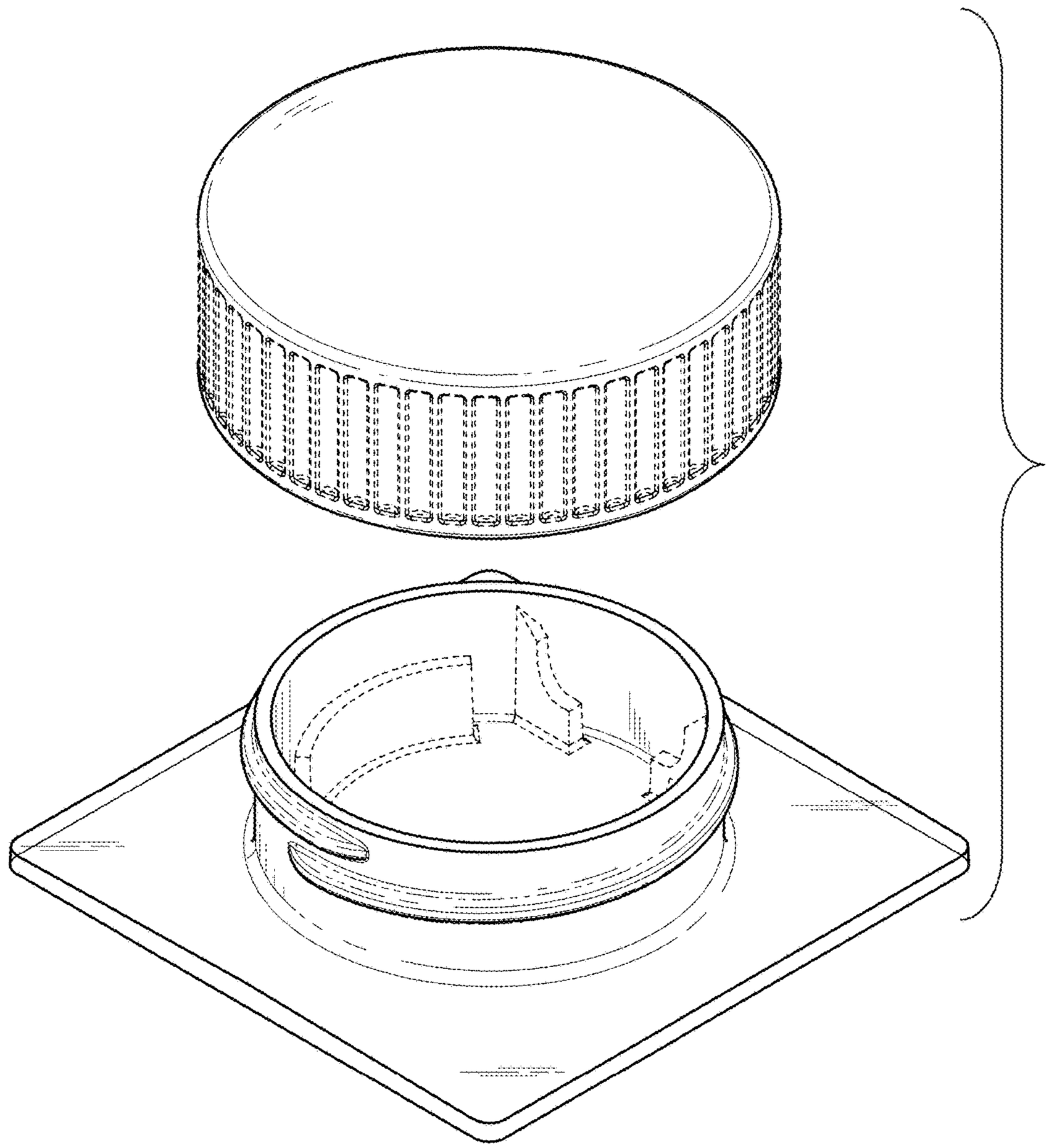

FIG. 8

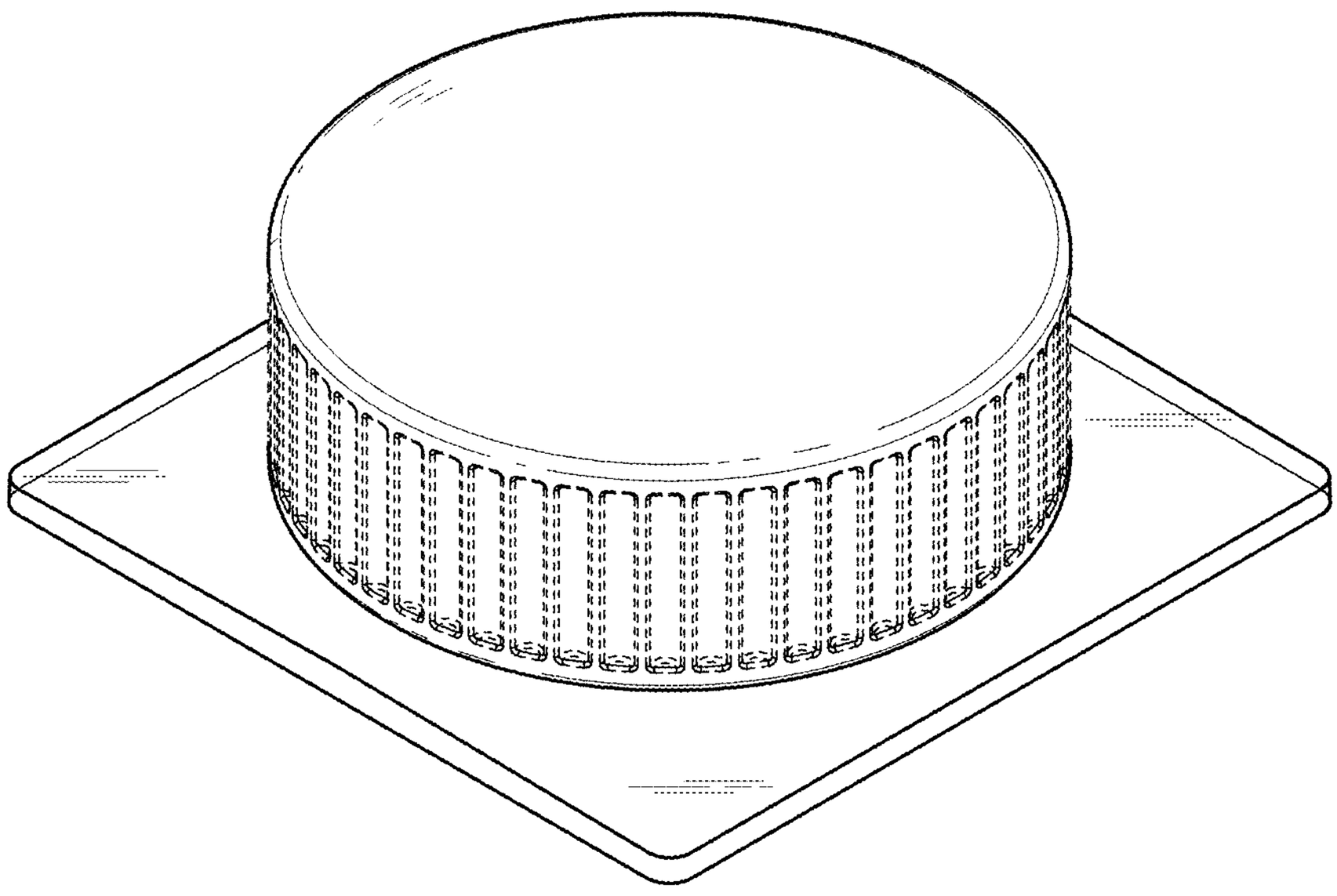

FIG. 9

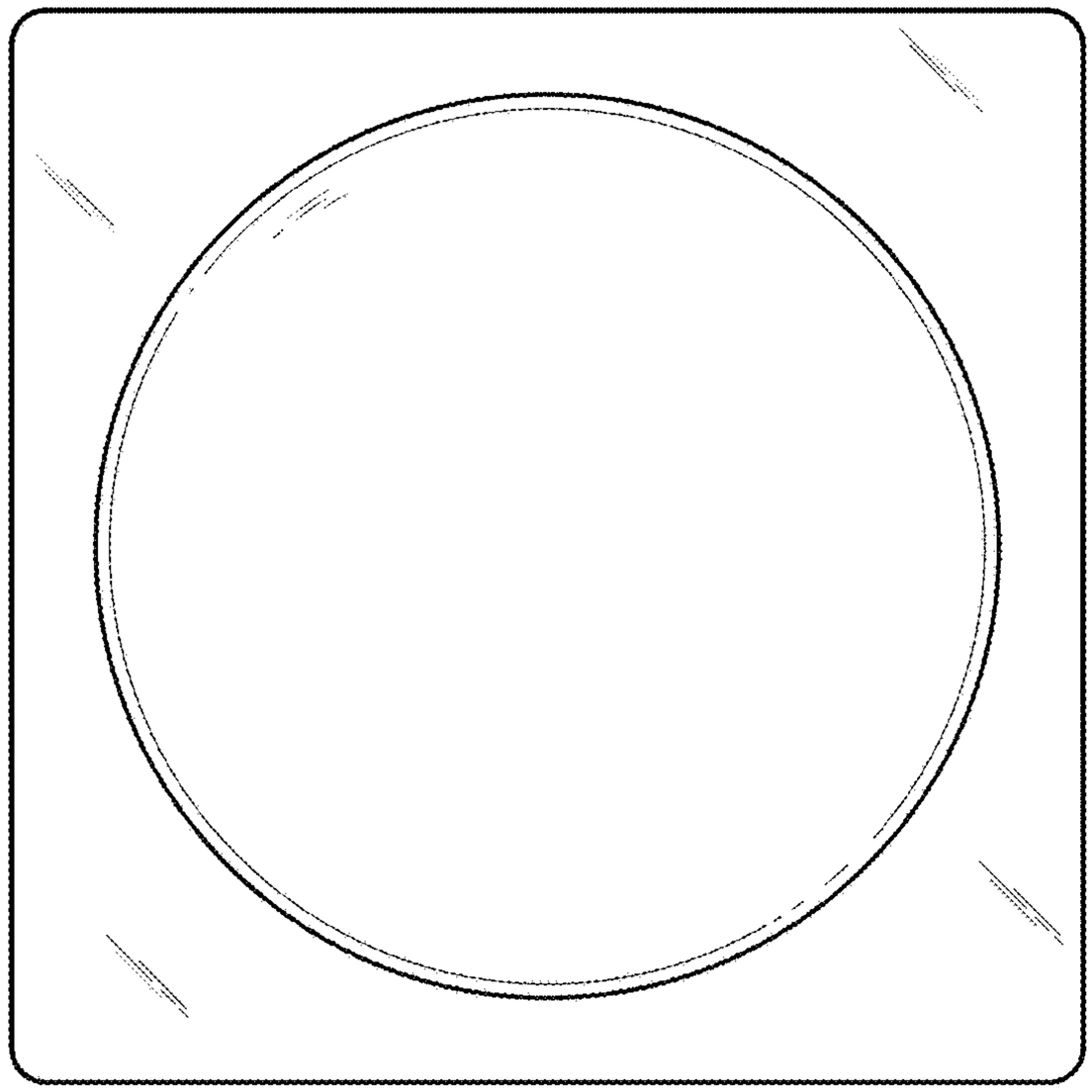

FIG. 10

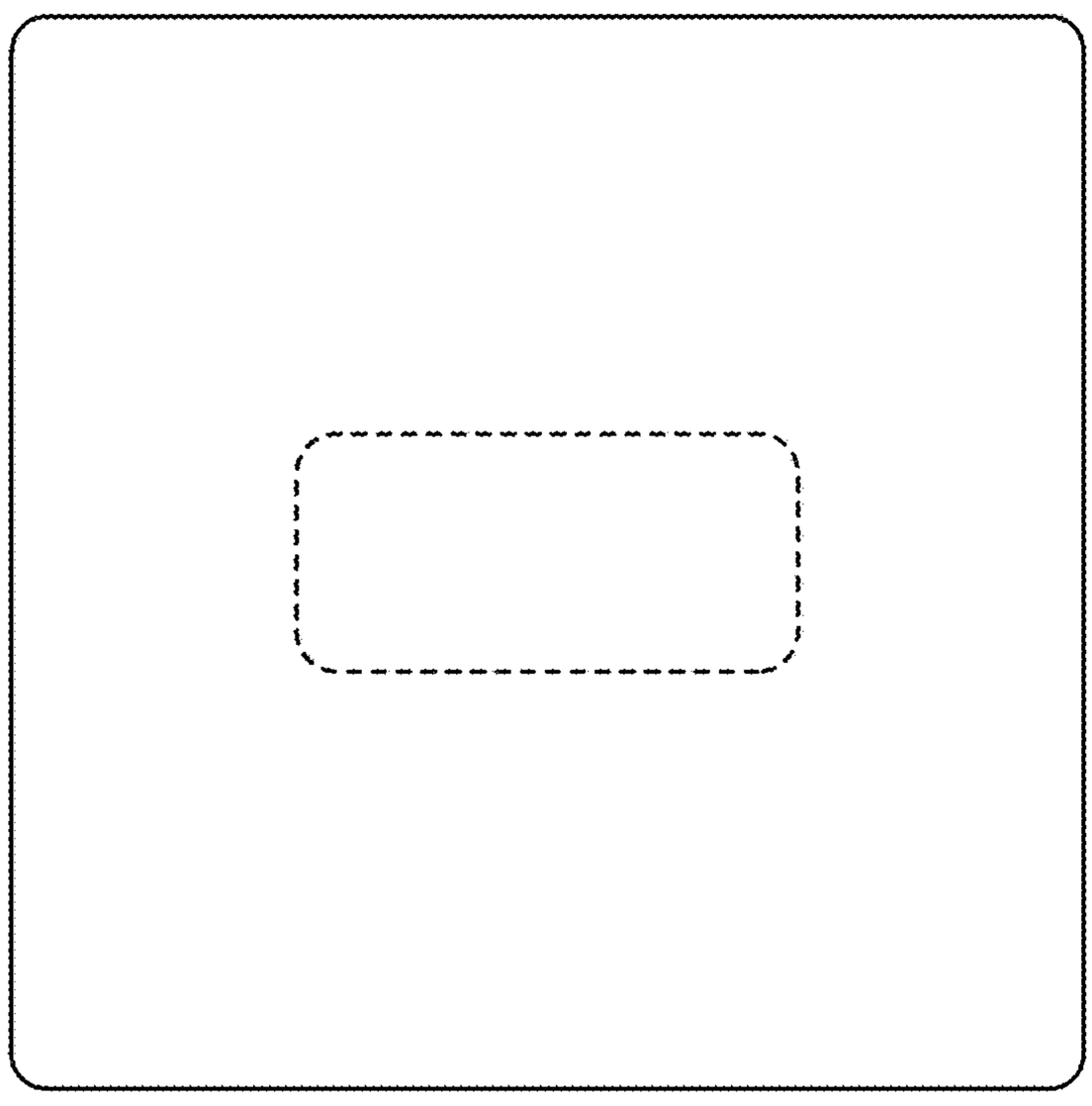

FIG. 11

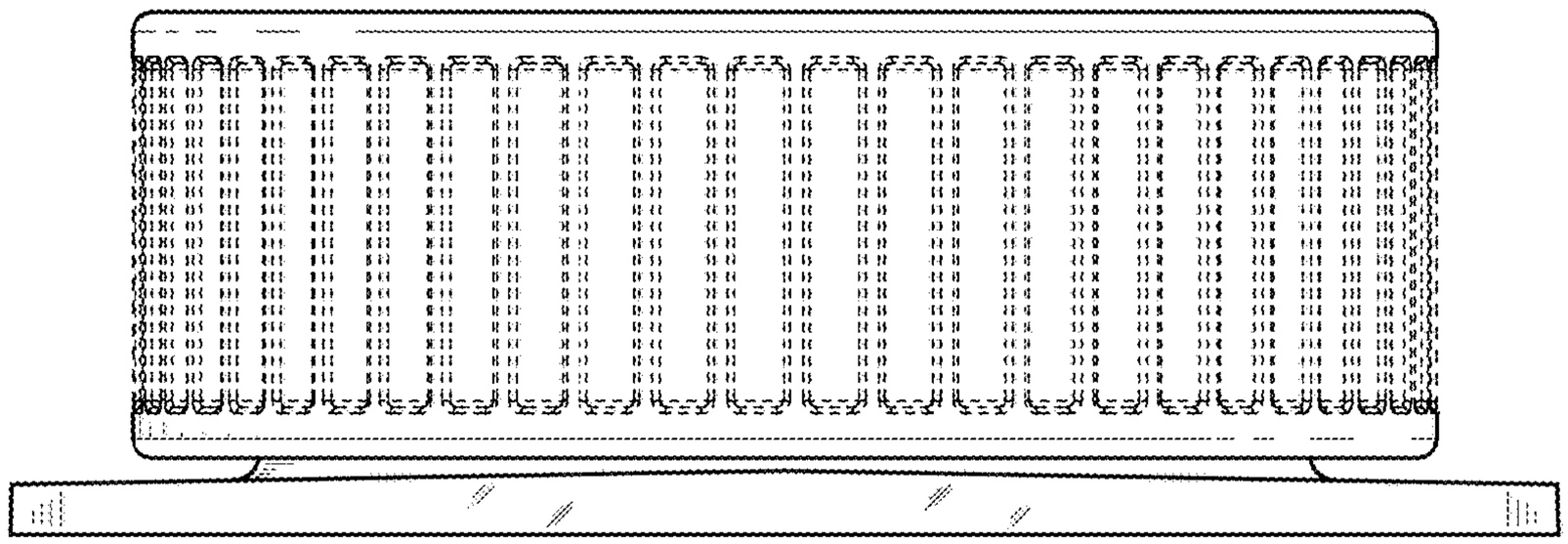

FIG. 12

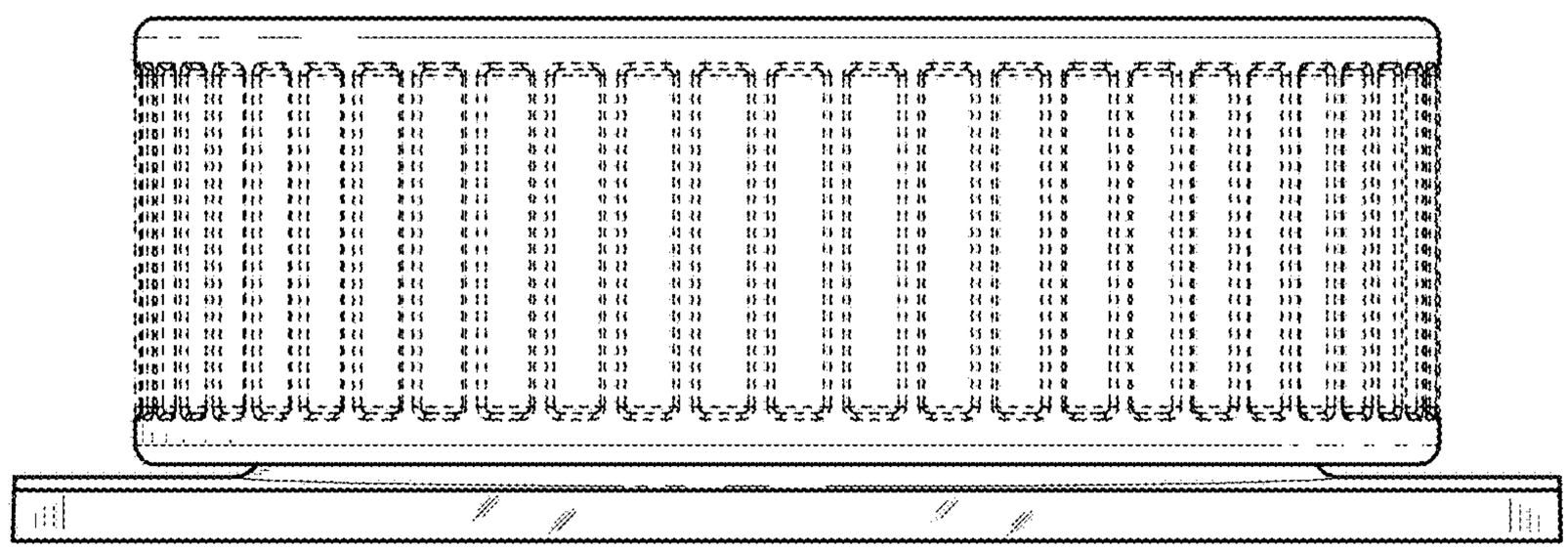

FIG. 13

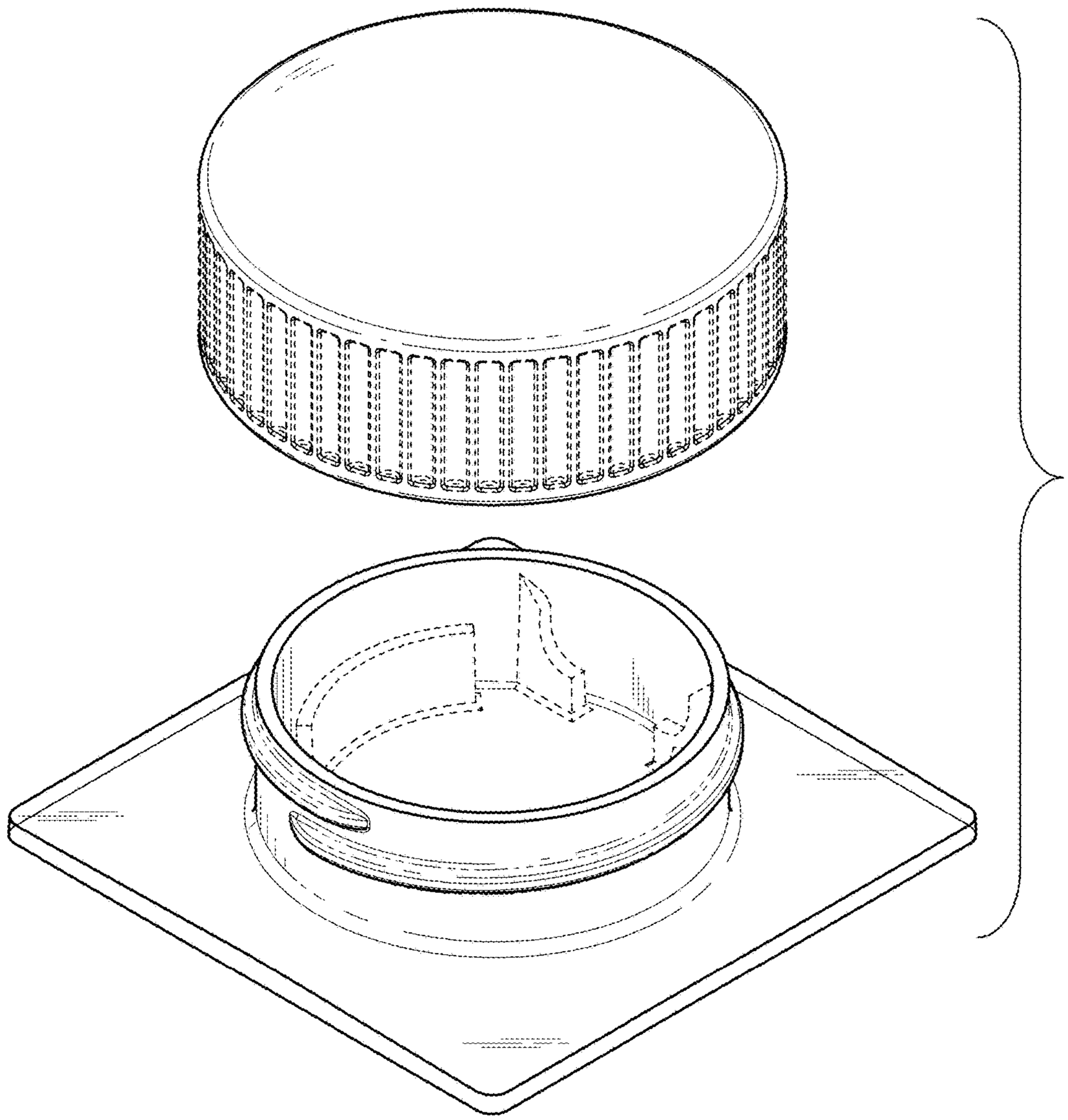

FIG. 14

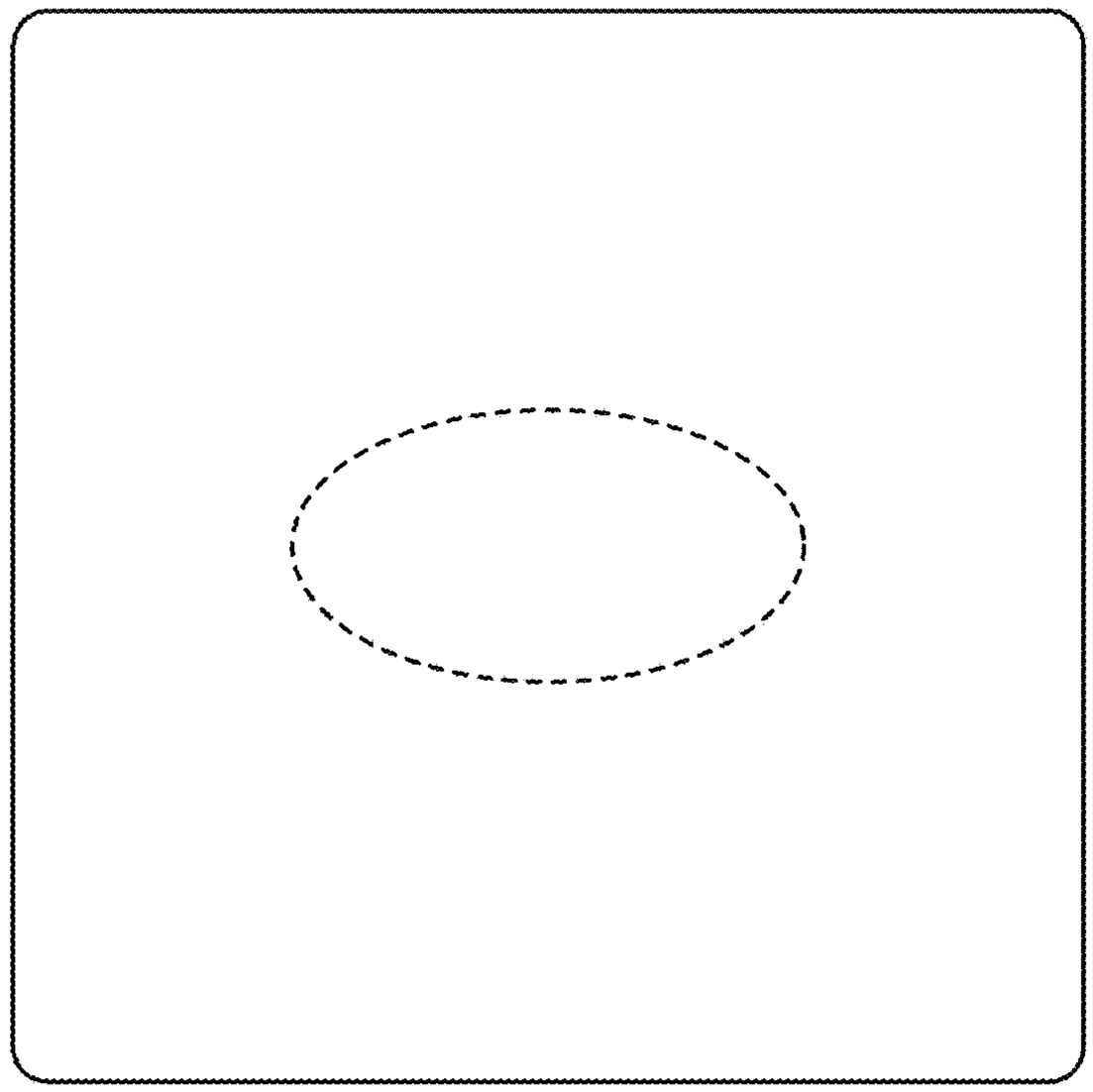

FIG. 15

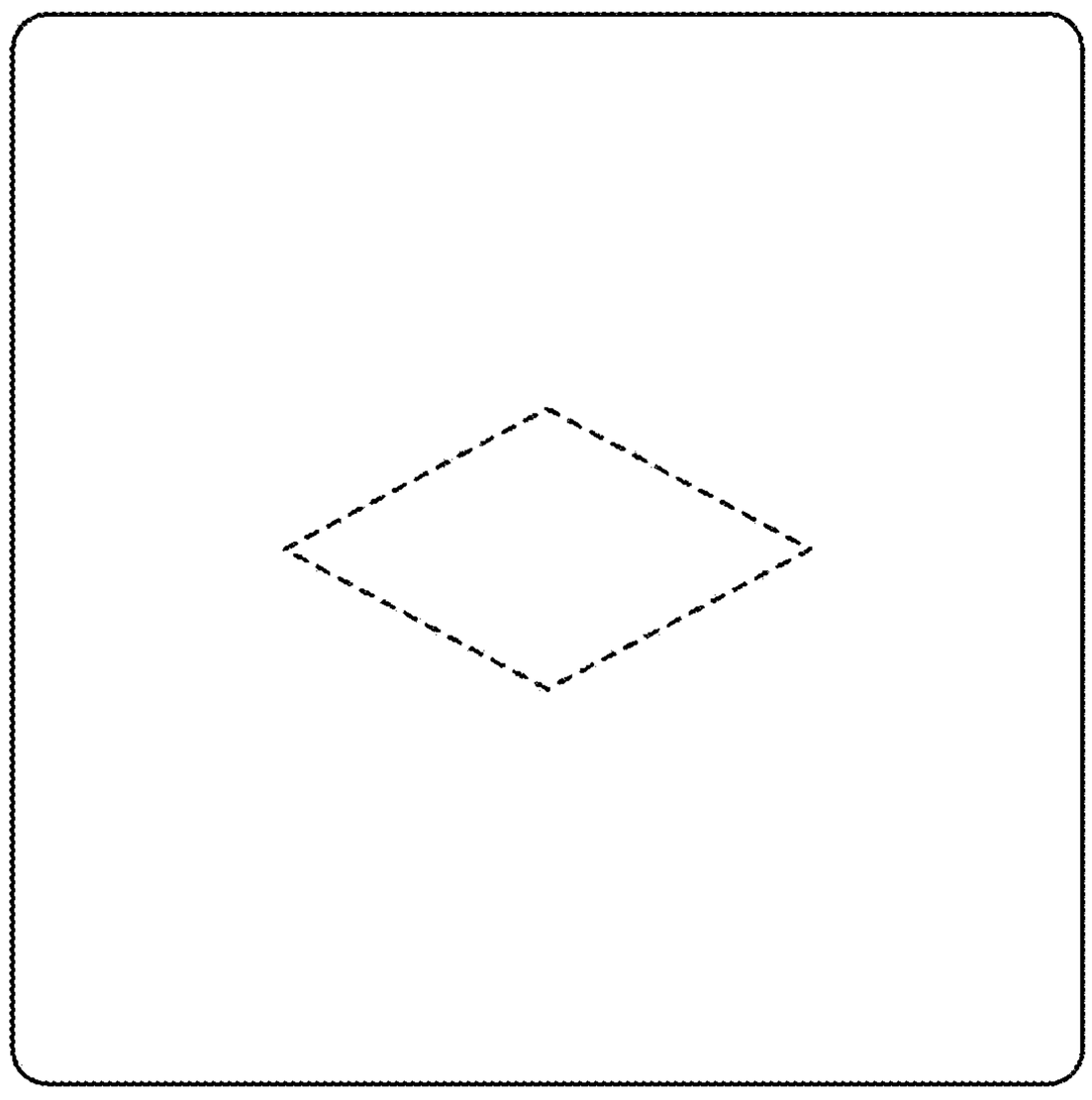

FIG. 16

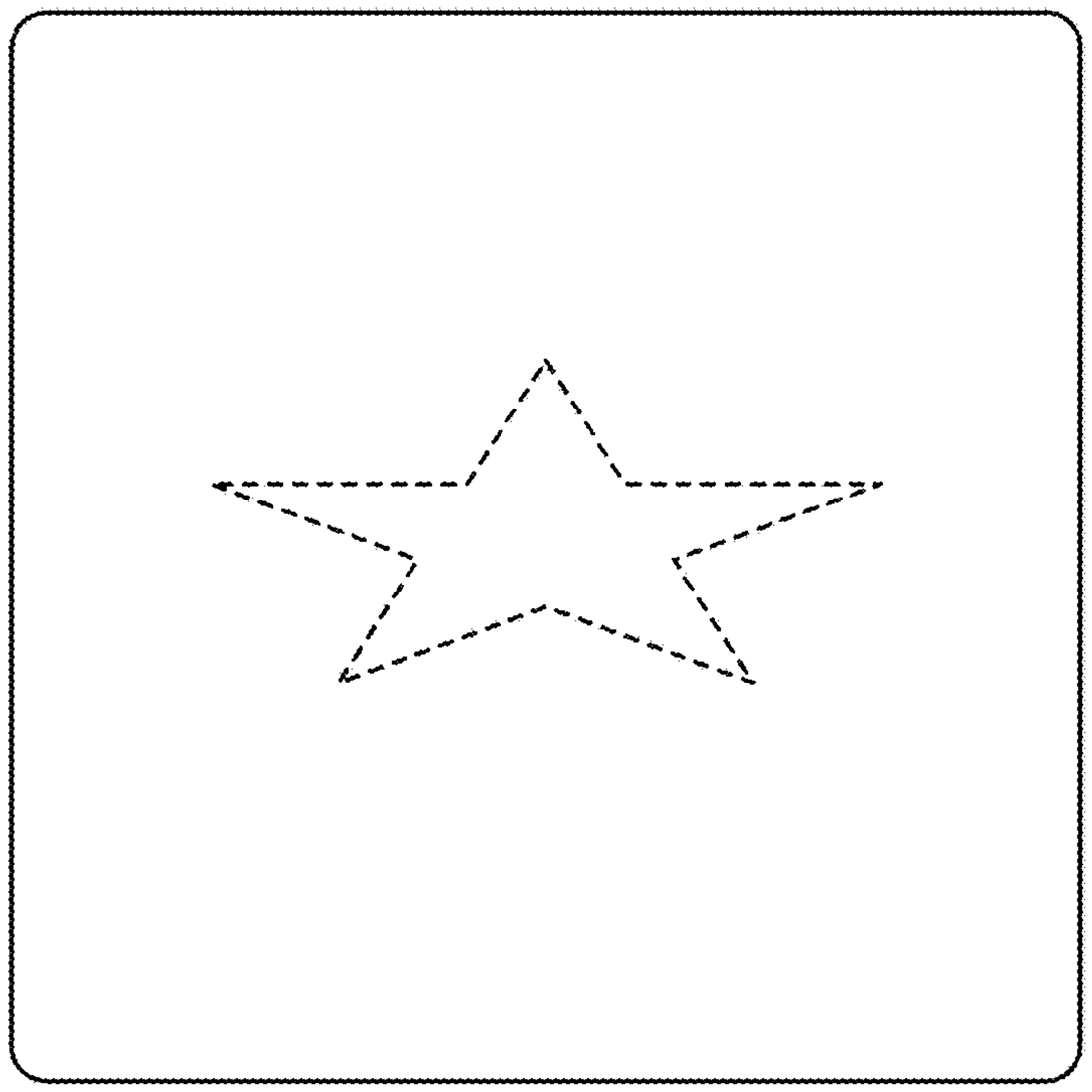

FIG. 17

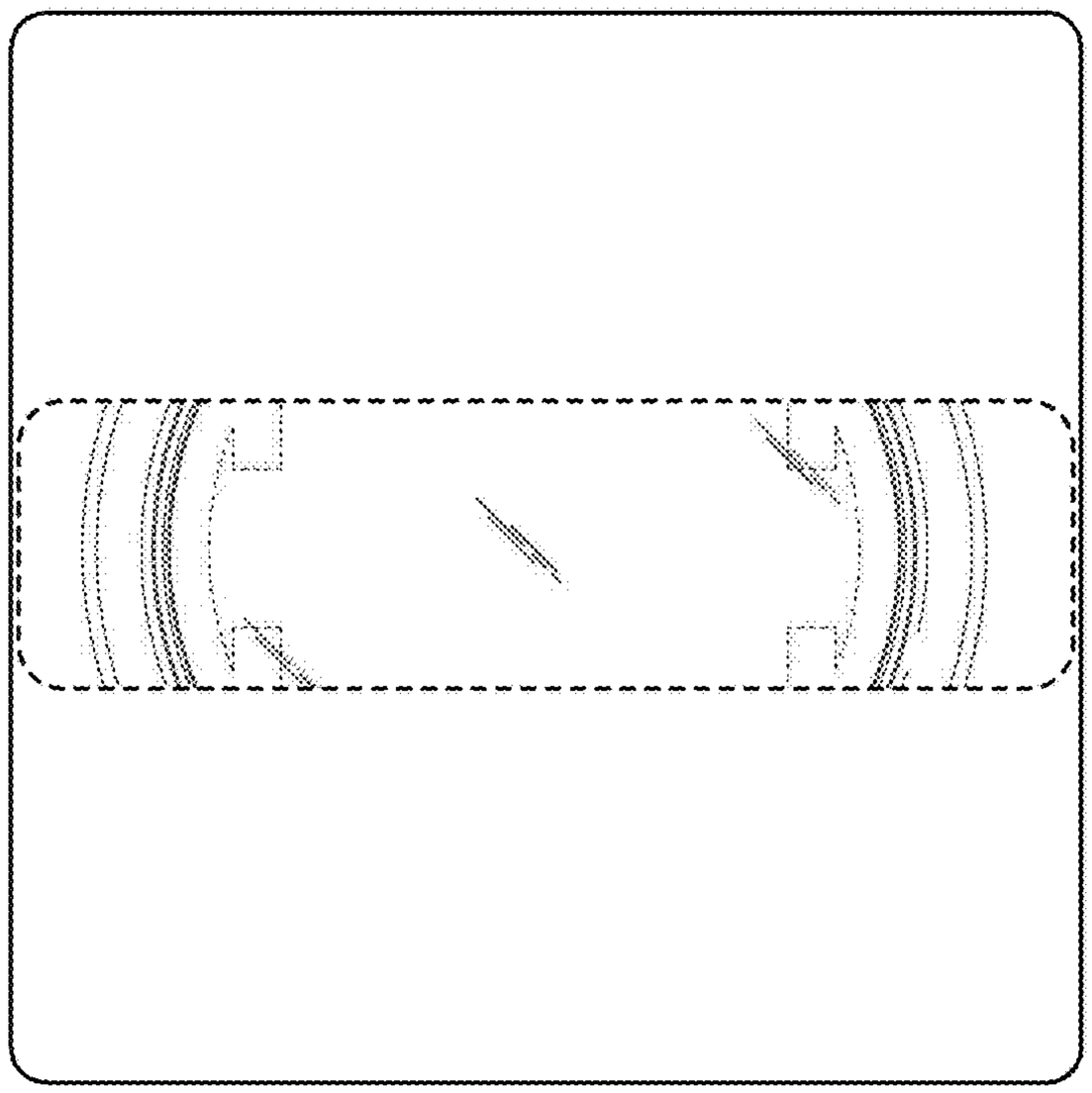

FIG. 18

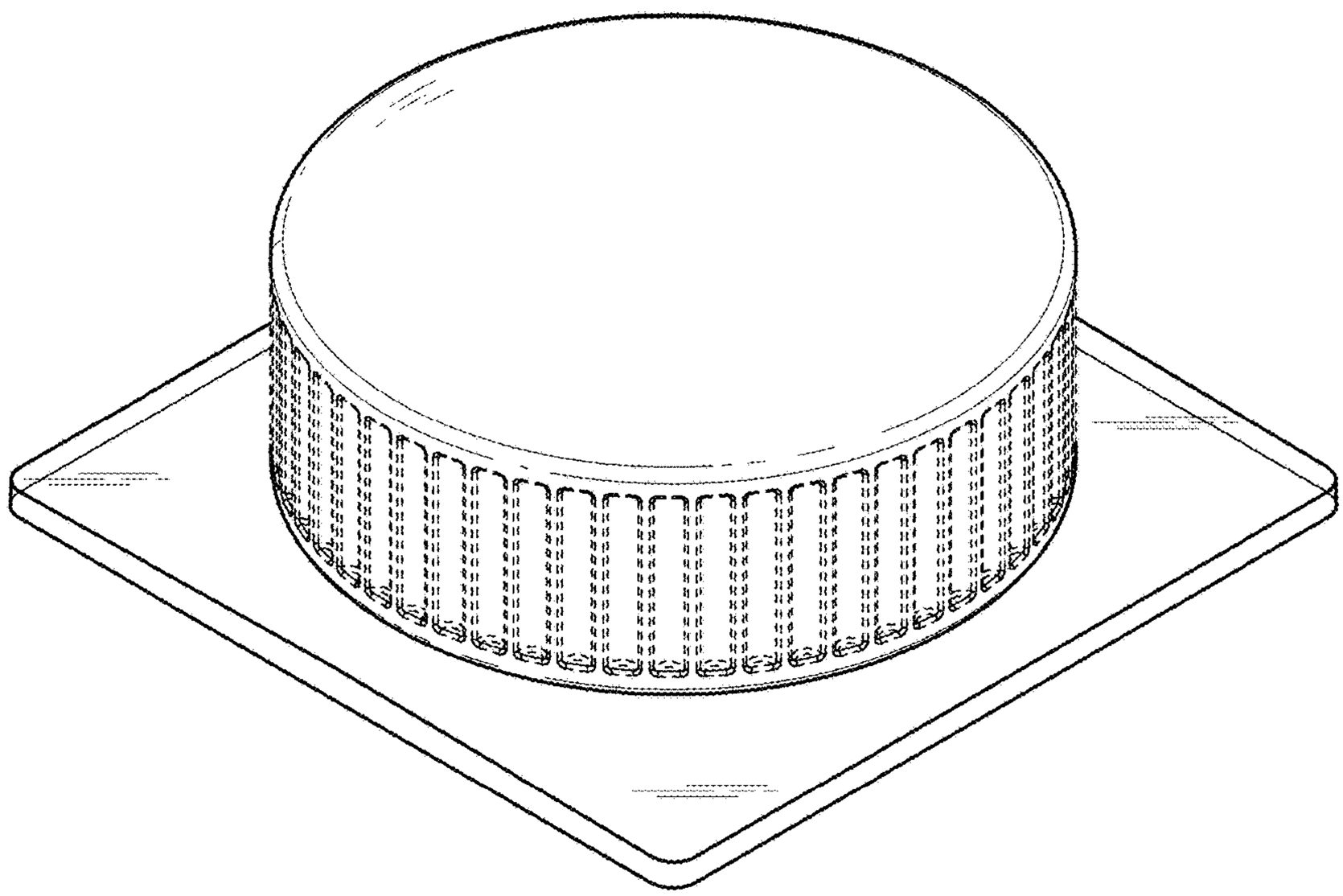

FIG. 19

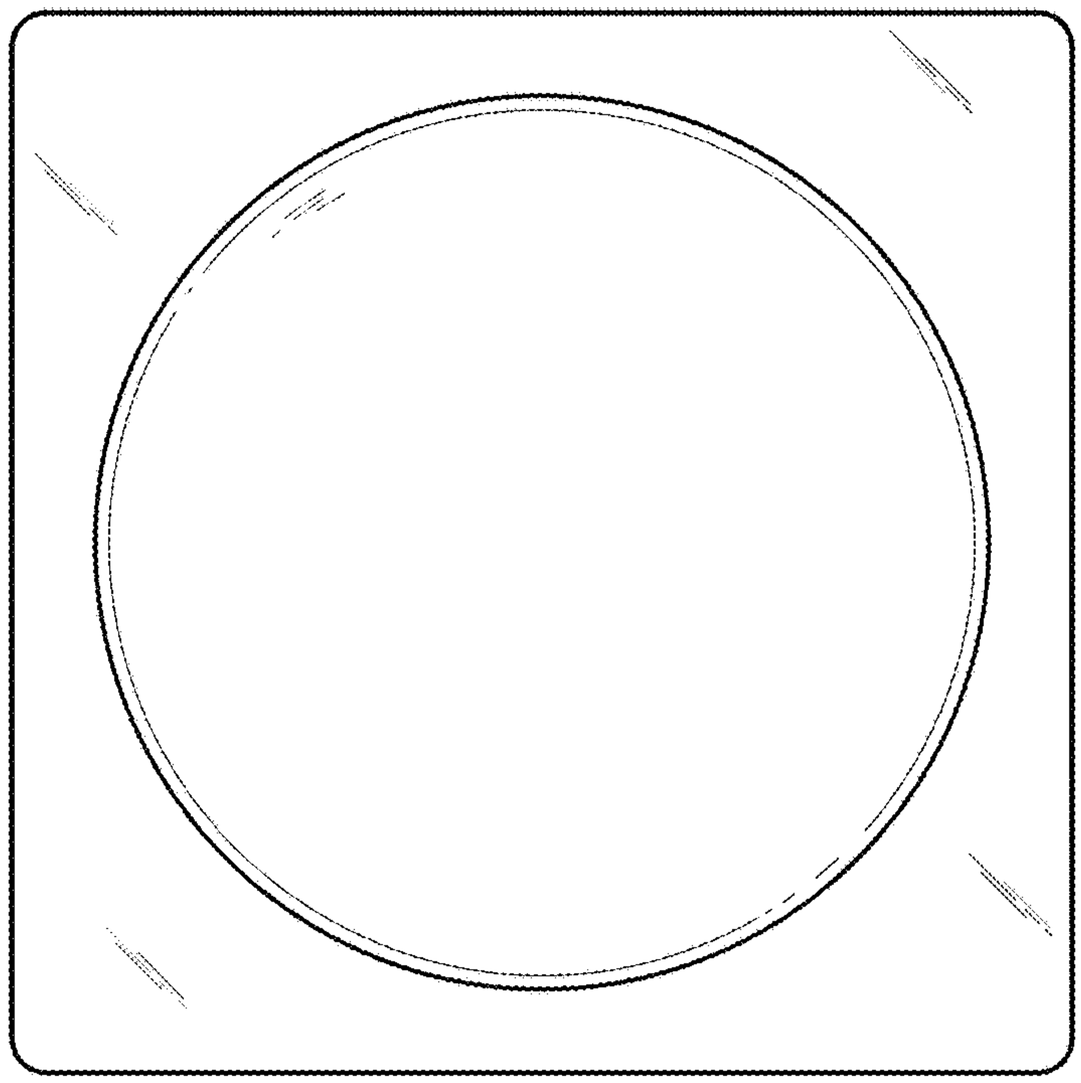

FIG. 20

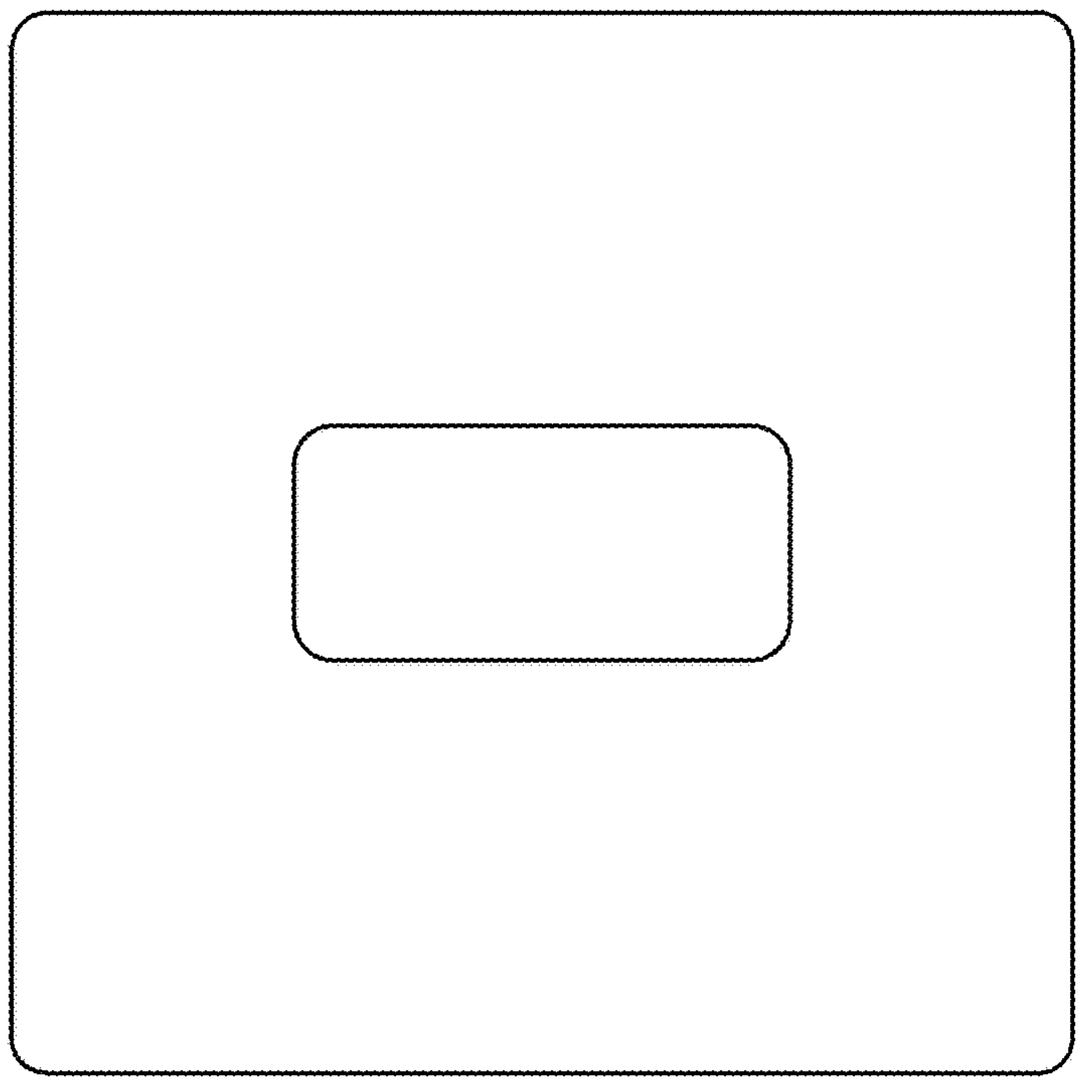

FIG. 21

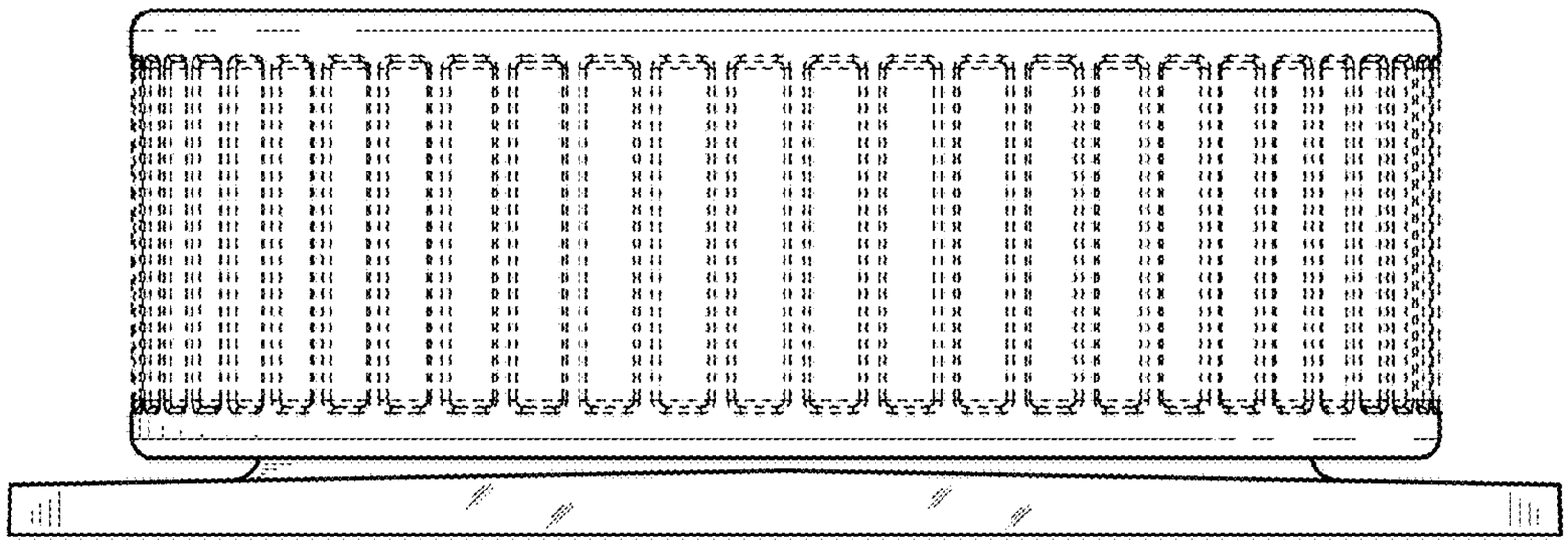

FIG. 22

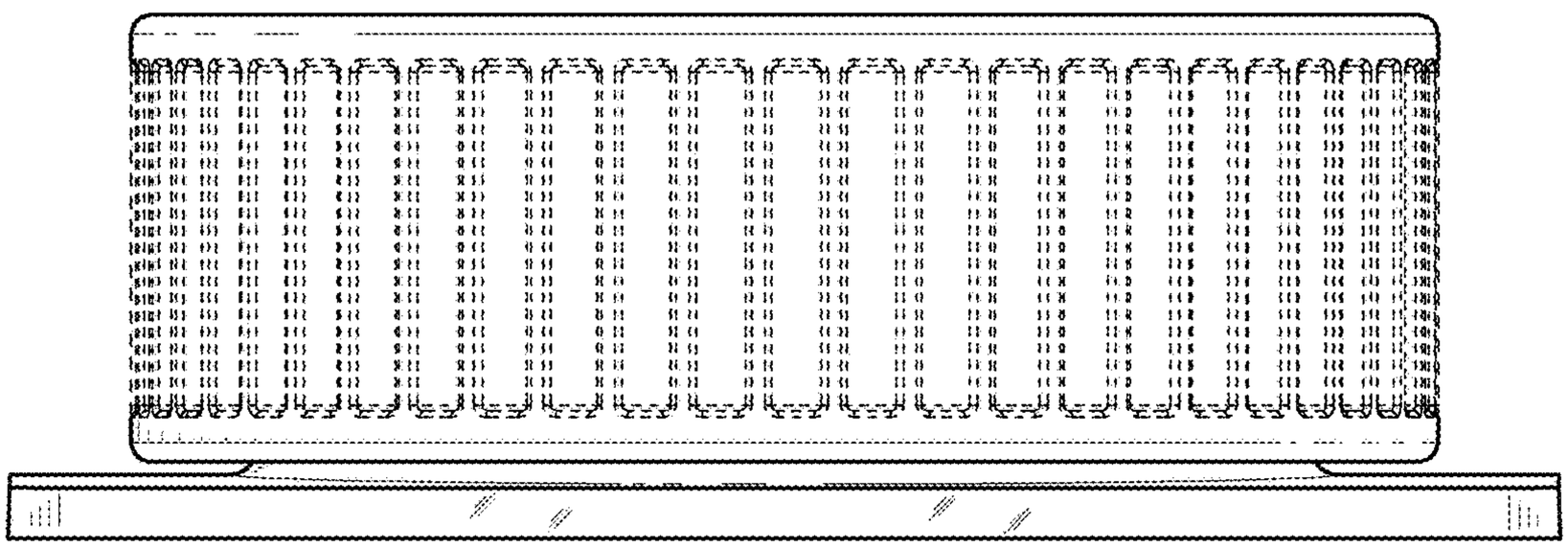

FIG. 23

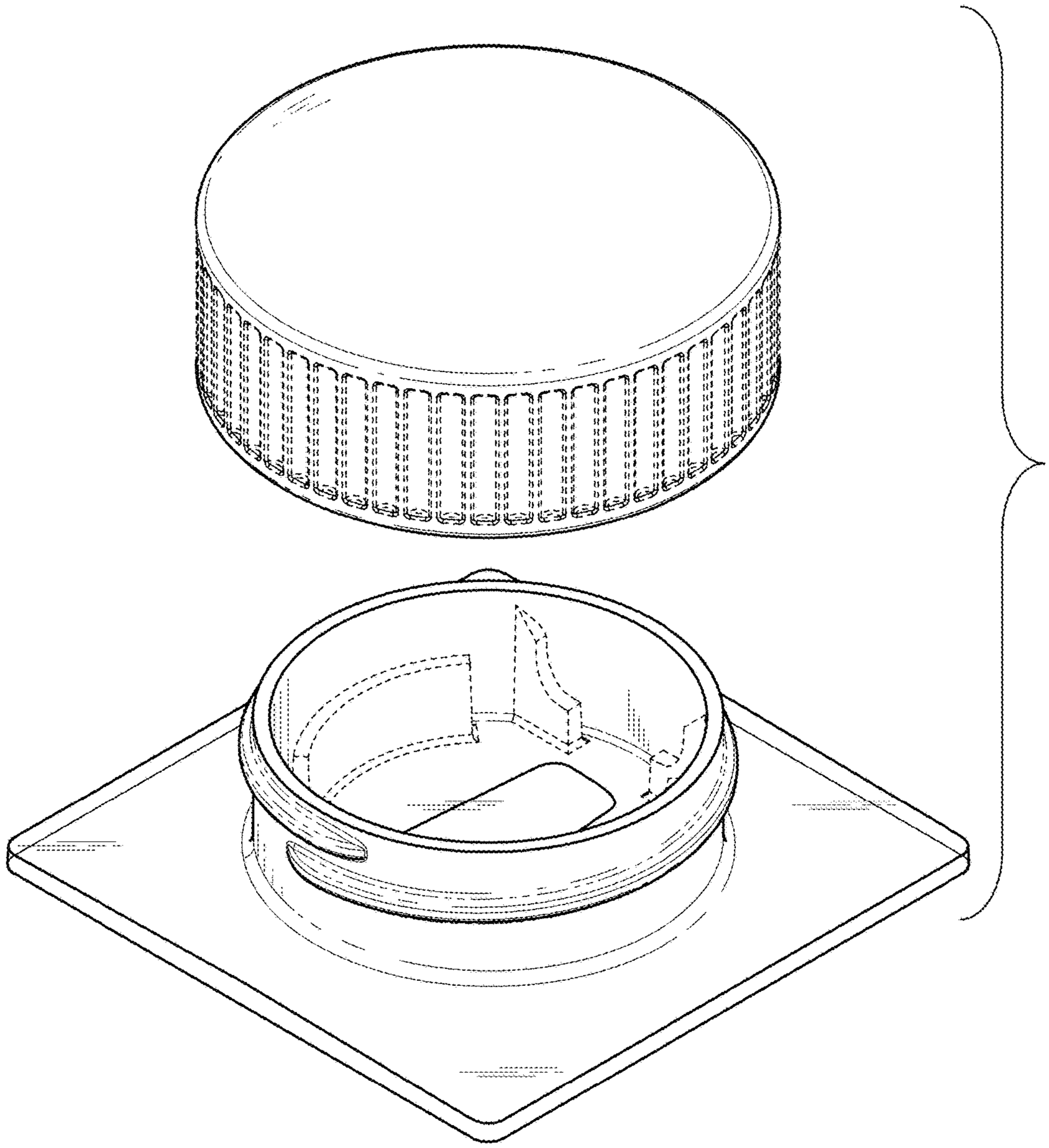

FIG. 24