US00D857072S

(12) United States Design Patent

Cyrulik et al.

(10) Patent No.: US D857,072 S
(45) Date of Patent: ** Aug. 20, 2019

(54) **AUTOMATED GUIDED VEHICLE**

(71) Applicant: **Symbotic LLC**, Wilmington, MA (US)

(72) Inventors: **Michael Cyrulik**, Sudbury, MA (US); **Michael Kapust**, Tewksbury, MA (US); **Todd E. Kepple**, Litchfield, NH (US)

(73) Assignee: **Symbotic, LLC**, Wilmington, MA (US)

(**) Term: **15 Years**

(21) Appl. No.: **29/621,320**

(22) Filed: **Oct. 6, 2017**

Related U.S. Application Data

(63) Continuation-in-part of application No. 15/003,983, filed on Jan. 22, 2016, now Pat. No. 9,850,079.

(51) **LOC (12) Cl.** **15-99**

(52) **U.S. Cl.**
USPC **D15/199**

(58) **Field of Classification Search**
USPC D15/199; D21/578–583, 621, 622; D34/12, 16, 28, 29, 35

(Continued)

(56) **References Cited**

U.S. PATENT DOCUMENTS

4,595,329 A 6/1986 Marques
4,936,738 A 6/1990 Brennan et al.

(Continued)

FOREIGN PATENT DOCUMENTS

AT 506221 7/2009
CA 1252430 4/1989

(Continued)

OTHER PUBLICATIONS

International Search Report, International Application No. PCT/US2016/014747, dated May 17, 2016.

(Continued)

Primary Examiner — Patricia A Palasik
(74) *Attorney, Agent, or Firm* — Perman & Green, LLP

(57) **CLAIM**

The ornamental design for an automated guided vehicle, as shown and described.

DESCRIPTION

This application is also related to U.S. patent application Ser. No. 14/966,978, filed on Dec. 11, 2015; U.S. patent application Ser. No. 14/997,902, filed on Jan. 18, 2016; U.S. patent application Ser. No. 14/997,925, filed on Jan. 18, 2016; U.S. patent application Ser. No. 14/997,920, filed on Jan. 18, 2016; and U.S. patent application Ser. No. 14/997,892, filed on Jan. 18, 2016, the disclosures of which are incorporated herein by reference in their entireties.

FIG. **1** is a front right perspective view of an automated guided vehicle in accordance with one form of the present invention;

FIG. **2** is a front left perspective view of the automated guided vehicle of FIG. **1**;

FIG. **3** is a rear left perspective view of the automated guided vehicle of FIG. **1**;

FIG. **4** is a top plan view of the automated guided vehicle of FIG. **1**;

FIG. **5** is a right side elevation view of the automated guided vehicle of FIG. **1**;

FIG. **6** is a front elevation view of the automated guided vehicle of FIG. **1**;

FIG. **7** is a rear elevation view of the automated guided vehicle of FIG. **1**; and,

FIG. **8** is a left side elevation view of the automated guided vehicle of FIG. **1**.

The broken lines in the drawings depict portions of the automated guided vehicle which form no part of the claimed design.

1 Claim, 8 Drawing Sheets

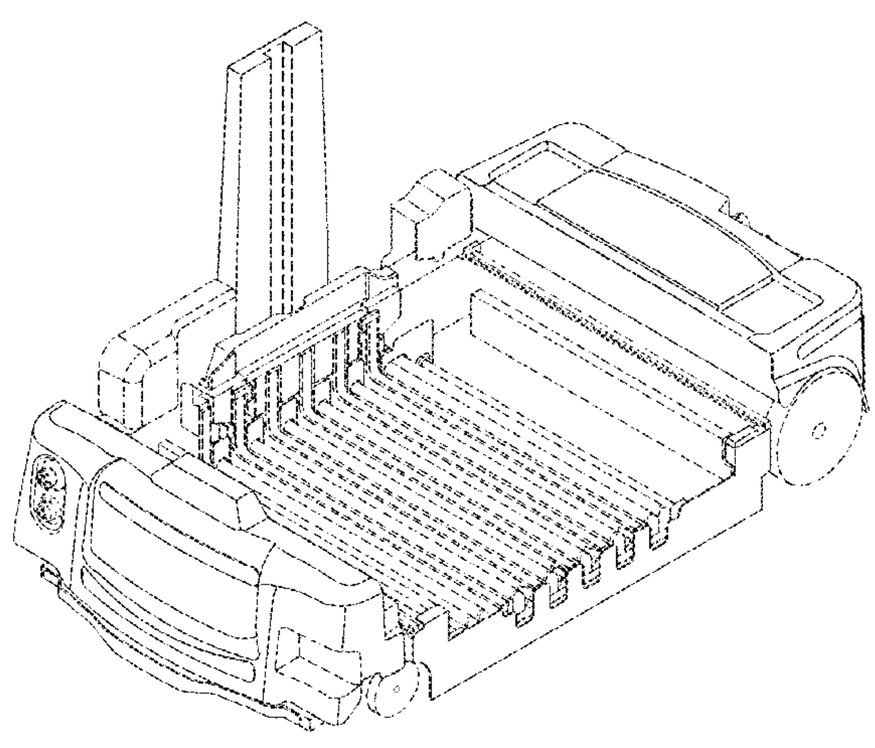

(58) **Field of Classification Search**
CPC ... B25J 5/00; B25J 5/007; B25J 9/0006; B25J 19/0016; Y10S 901/01; Y10S 901/19; Y10S 901/27
See application file for complete search history.

(56) **References Cited**

U.S. PATENT DOCUMENTS

5,154,249 A * 10/1992 Yardley B60D 1/06 180/168
5,380,139 A 1/1995 Pohjonen et al.
6,019,563 A * 2/2000 Murata B23Q 7/1436 414/222.01
6,923,612 B2 8/2005 Hansl
7,931,431 B2 4/2011 Benedict et al.
8,425,173 B2 4/2013 Lert
8,480,347 B2 7/2013 Schafer
8,594,835 B2 11/2013 Lert et al.
8,596,952 B2 12/2013 Wolkerstorfer
8,740,542 B2 6/2014 Wolkerstorfer
8,790,061 B2 7/2014 Yamashita
8,894,344 B2 11/2014 Merry et al.
8,954,188 B2 2/2015 Sullivan et al.
8,956,099 B2 2/2015 Olszak
8,974,168 B2 3/2015 Yamashita
9,008,884 B2 4/2015 Toebes
9,037,286 B2 5/2015 Lert
D741,609 S * 10/2015 Williams D6/338
9,315,323 B2 4/2016 Schubiiske
9,321,591 B2 4/2016 Lert
9,409,728 B2 8/2016 Bastian
10,202,061 B2 * 2/2019 Scherle B66F 9/063
2004/0042885 A1 * 3/2004 Rokkaku B60L 15/38 414/529
2004/0197171 A1 10/2004 Freudelsperger
2006/0245862 A1 11/2006 Hansl et al.
2007/0276541 A1 * 11/2007 Sawasaki G05D 1/0246 700/253
2008/0131241 A1 6/2008 King
2009/0074545 A1 * 3/2009 Lert, Jr. B65G 1/0492 414/276
2010/0230196 A1 * 9/2010 Nishimura B60L 8/003 180/165
2010/0272546 A1 10/2010 Wolkerstorfer
2010/0316468 A1 * 12/2010 Lert B65G 1/045 414/273
2010/0316469 A1 * 12/2010 Lert B65G 1/045 414/273
2011/0106352 A1 * 5/2011 Scheuerman G05D 1/0242 701/22
2012/0141236 A1 6/2012 Korner
2012/0185082 A1 * 7/2012 Toebes B65G 1/0492 700/218
2012/0185122 A1 * 7/2012 Sullivan G05D 1/0272 701/23
2012/0189409 A1 * 7/2012 Toebes B65G 1/0492 414/273
2012/0189410 A1 * 7/2012 Toebes B65G 1/0492 414/273
2012/0189416 A1 * 7/2012 Toebes B65G 1/0492 414/509
2012/0195720 A1 * 8/2012 Sullivan B65G 1/04 414/277
2012/0195724 A1 * 8/2012 Toebes B65G 13/00 414/509
2012/0197431 A1 * 8/2012 Toebes B65G 1/0492 700/217
2012/0330458 A1 12/2012 Weiss
2013/0129453 A1 5/2013 Salichs et al.
2013/0209202 A1 8/2013 Schmit
2013/0245810 A1 * 9/2013 Sullivan G06Q 10/08 700/214
2014/0044506 A1 2/2014 De Vries
2014/0056672 A1 2/2014 Mathys
2014/0088748 A1 3/2014 Woodtli et al.
2014/0100999 A1 4/2014 Mountz
2014/0124462 A1 5/2014 Yamashita
2014/0277692 A1 9/2014 Buzan et al.
2014/0308098 A1 * 10/2014 Lert B65G 1/0492 414/281
2014/0350717 A1 11/2014 Dagle
2015/0098775 A1 4/2015 Razumov
2015/0203296 A1 * 7/2015 Buzan B65G 1/0492 700/218
2015/0225187 A1 8/2015 Razumov
2015/0243949 A1 * 8/2015 Fukui H01M 2/1083 429/93
2016/0016731 A1 1/2016 Razumov
2016/0167880 A1 * 6/2016 Pankratov B65G 1/0492 414/281
2016/0207709 A1 7/2016 Pankratov
2016/0207710 A1 * 7/2016 Conrad B65G 1/0485
2016/0207711 A1 7/2016 Pankratov
2016/0214797 A1 7/2016 Pankratov et al.
2016/0214808 A1 * 7/2016 Cyrulik B65G 1/1373
2017/0144502 A1 * 5/2017 Bae B62D 61/12
2017/0182924 A1 * 6/2017 Lendo B60L 53/16
2018/0072212 A1 * 3/2018 Alfaro B60G 3/08
2018/0099811 A1 * 4/2018 Shen B65G 1/0492

FOREIGN PATENT DOCUMENTS

DE	2011106677	1/2013
EP	D169156	1/1986
GB	2407565	5/2005
WO	2004103883	12/2004
WO	2009150684	12/2009
WO	2012156355	11/2012
WO	2014145450	9/2014

OTHER PUBLICATIONS

International Search Report, International Application No. PCT/US2015/065574, dated Feb. 12, 2016.
International Search Report, International Application No. PCT/US2016/013877, dated May 11, 2016.
International Search Report, International Application No. PCT/US2016/013917, dated Jul. 12, 2016.

* cited by examiner

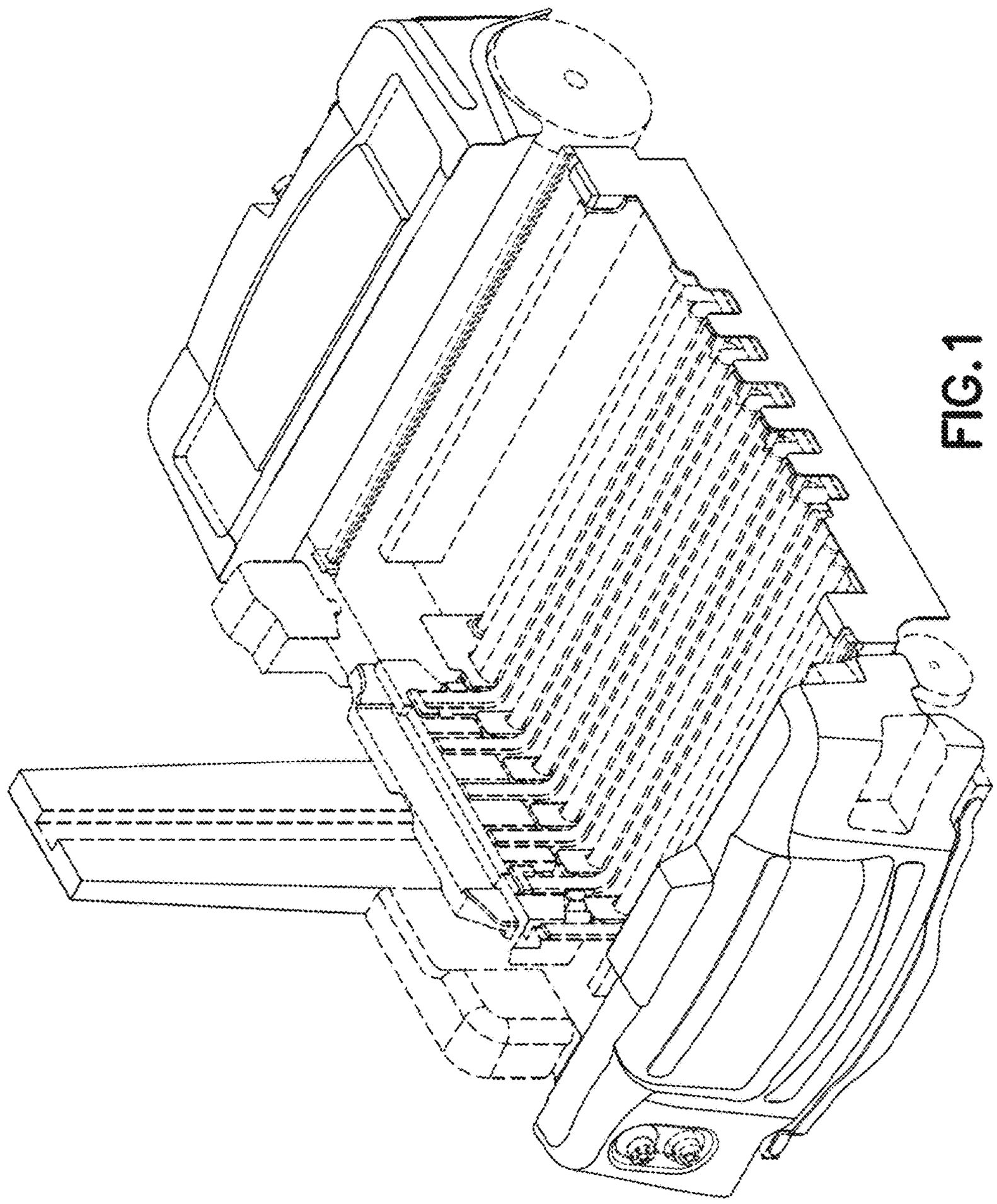

FIG. 1

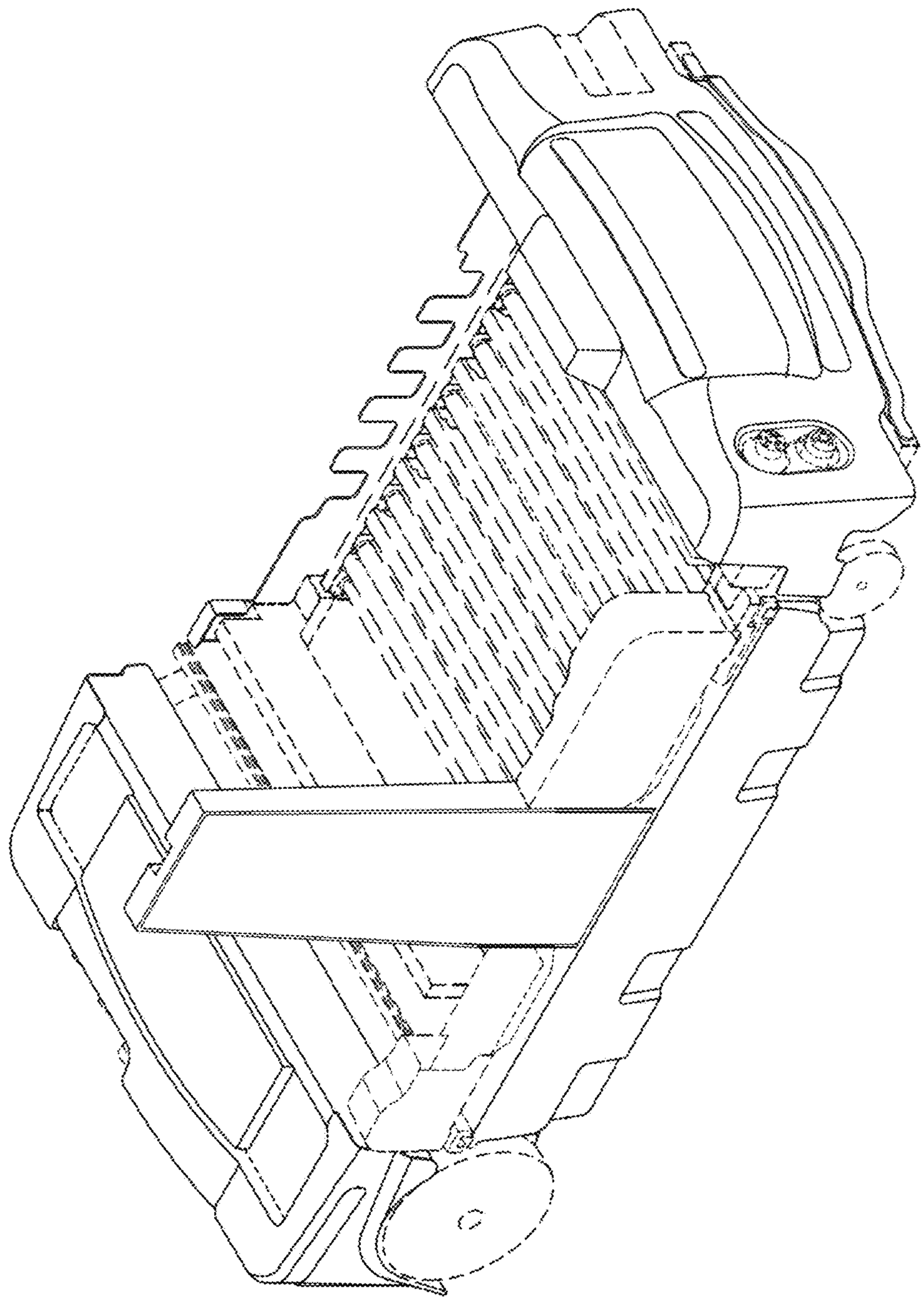

FIG. 2

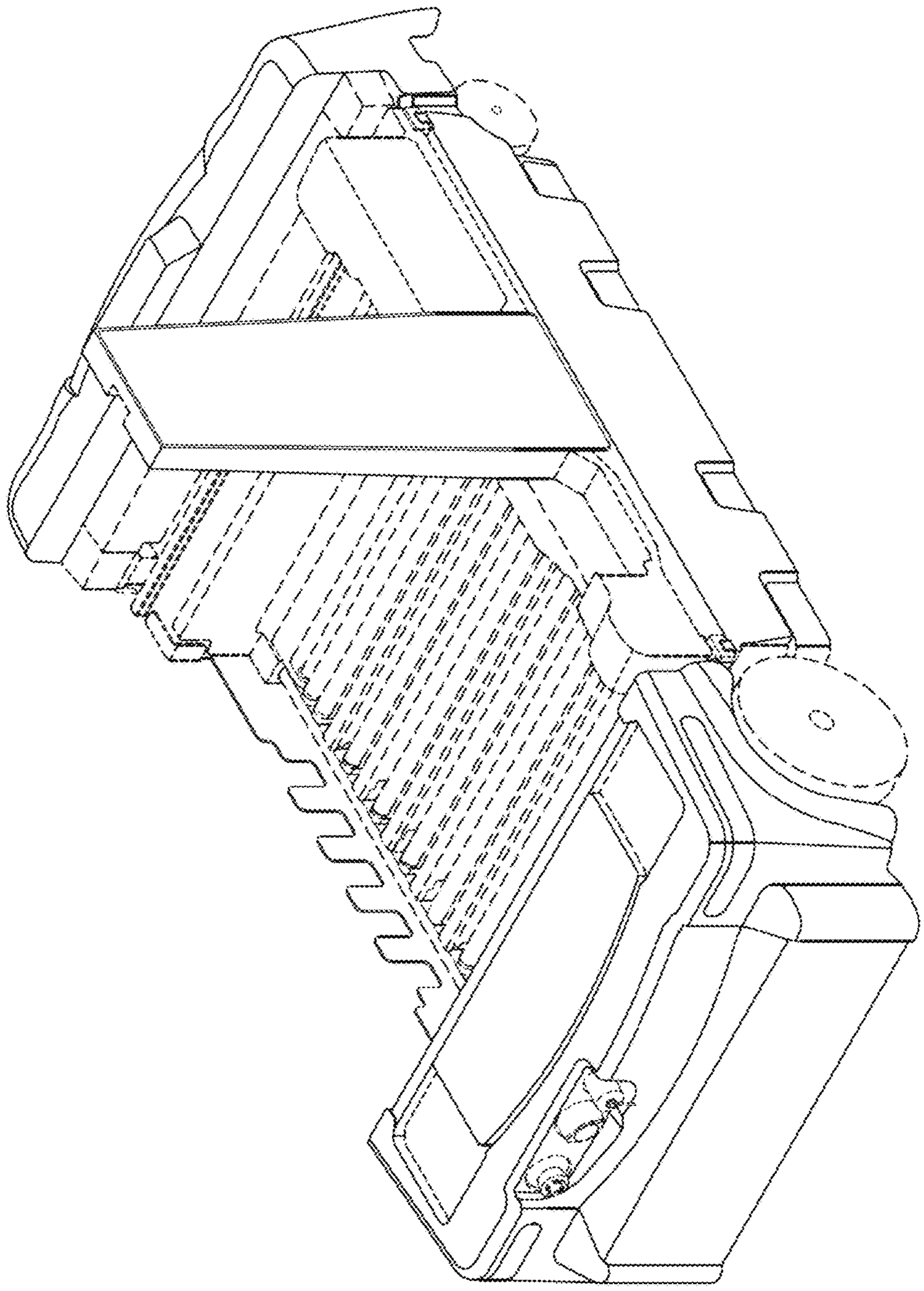

FIG.3

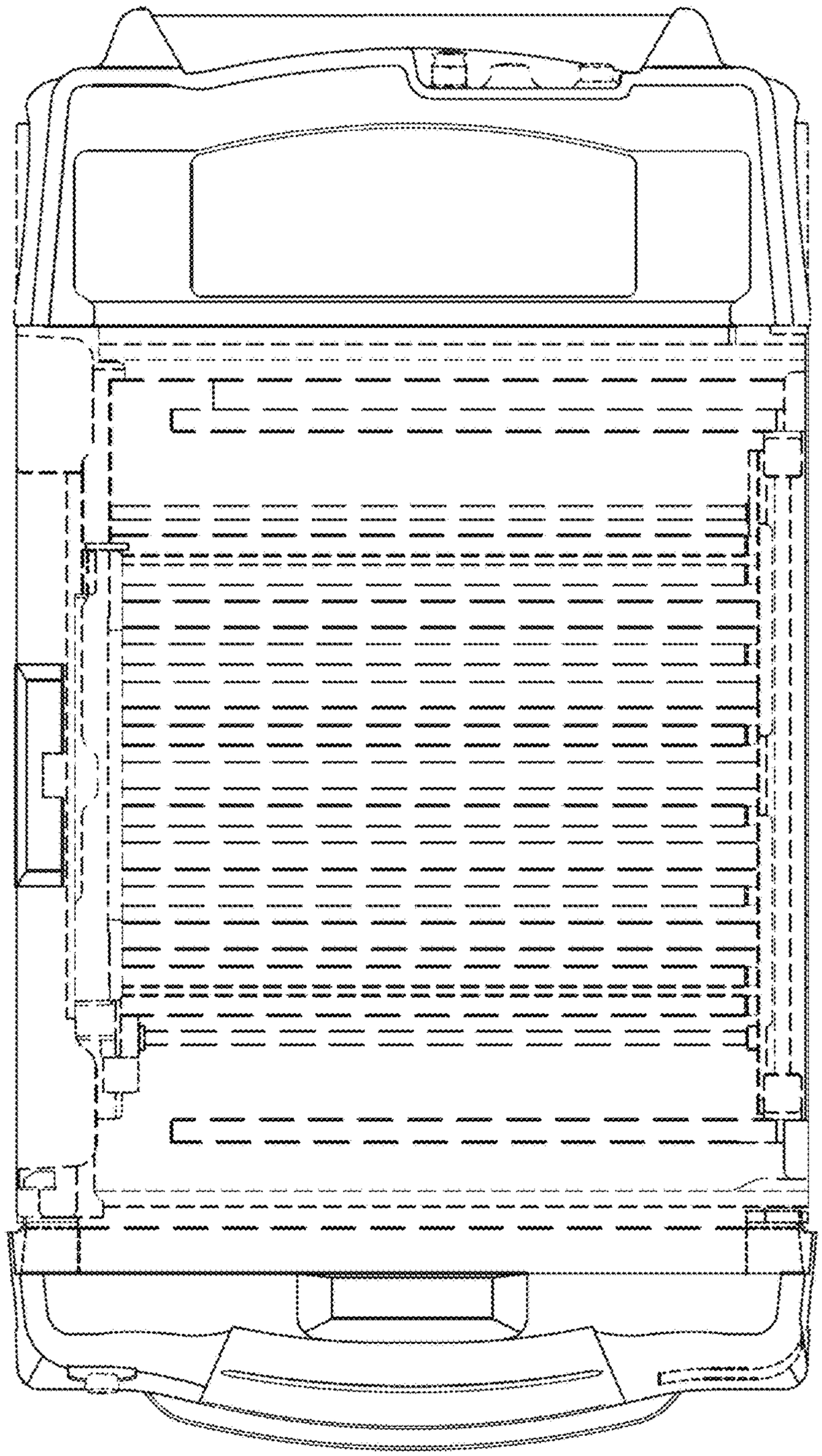

FIG. 4

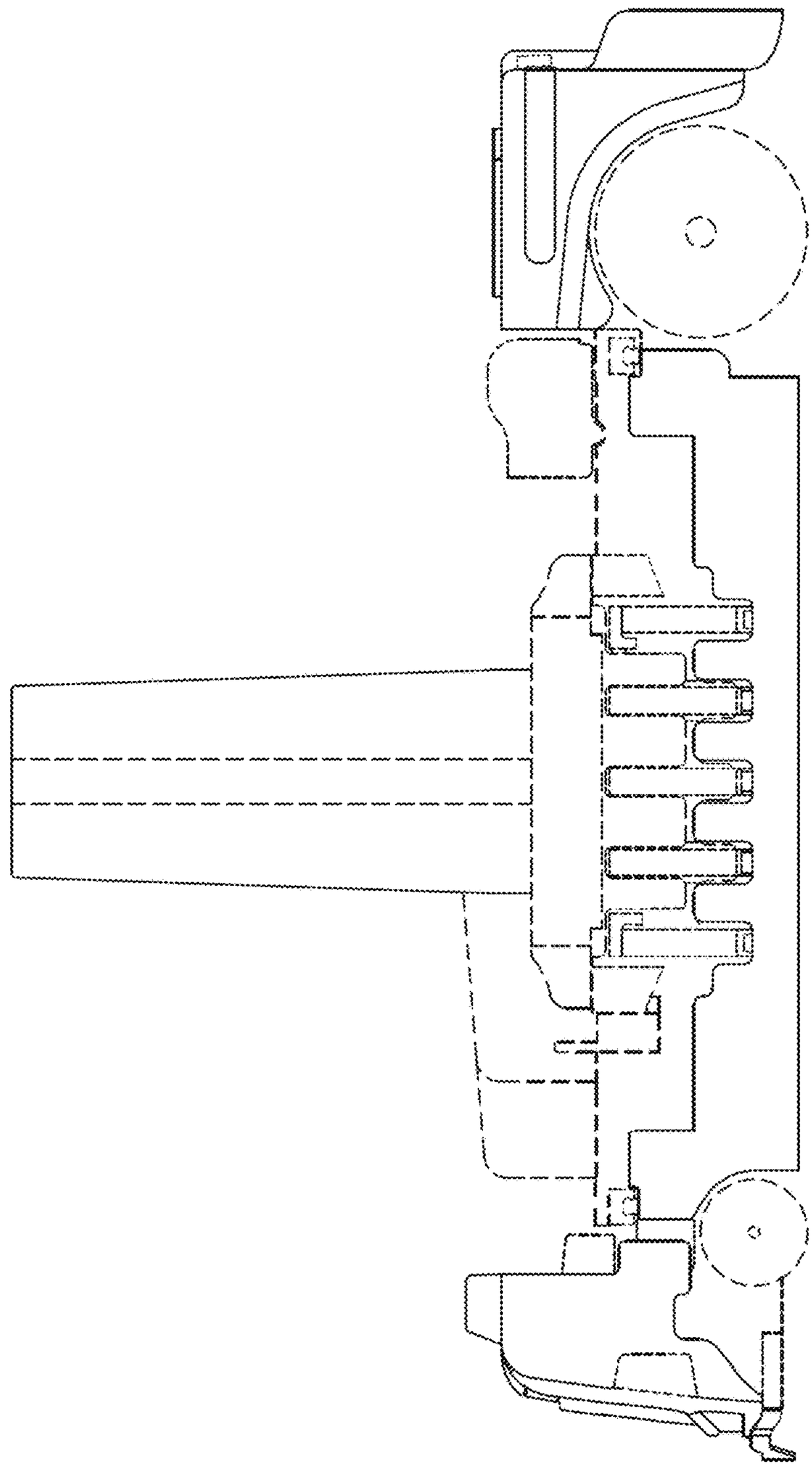

FIG.5

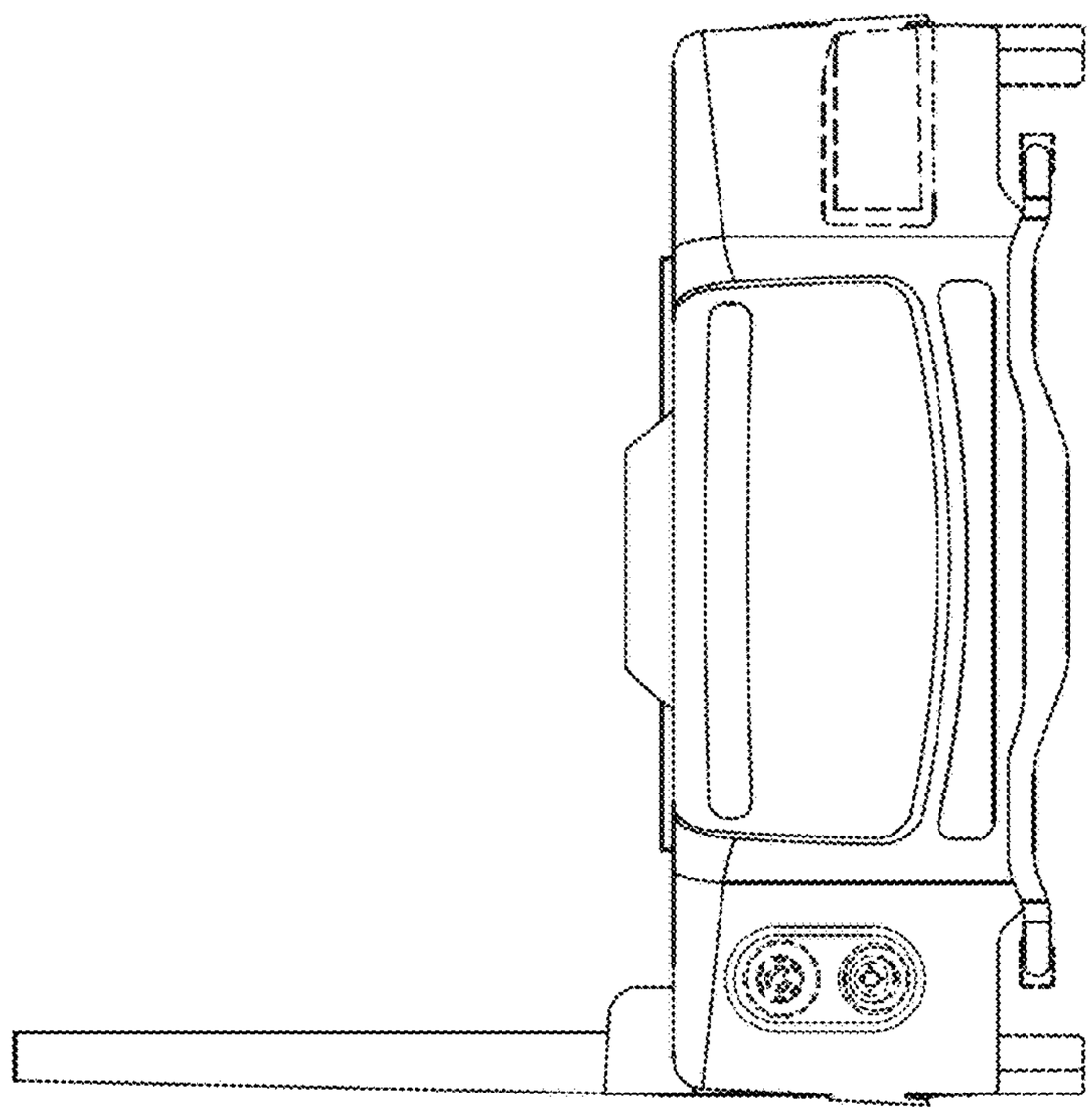

FIG.6

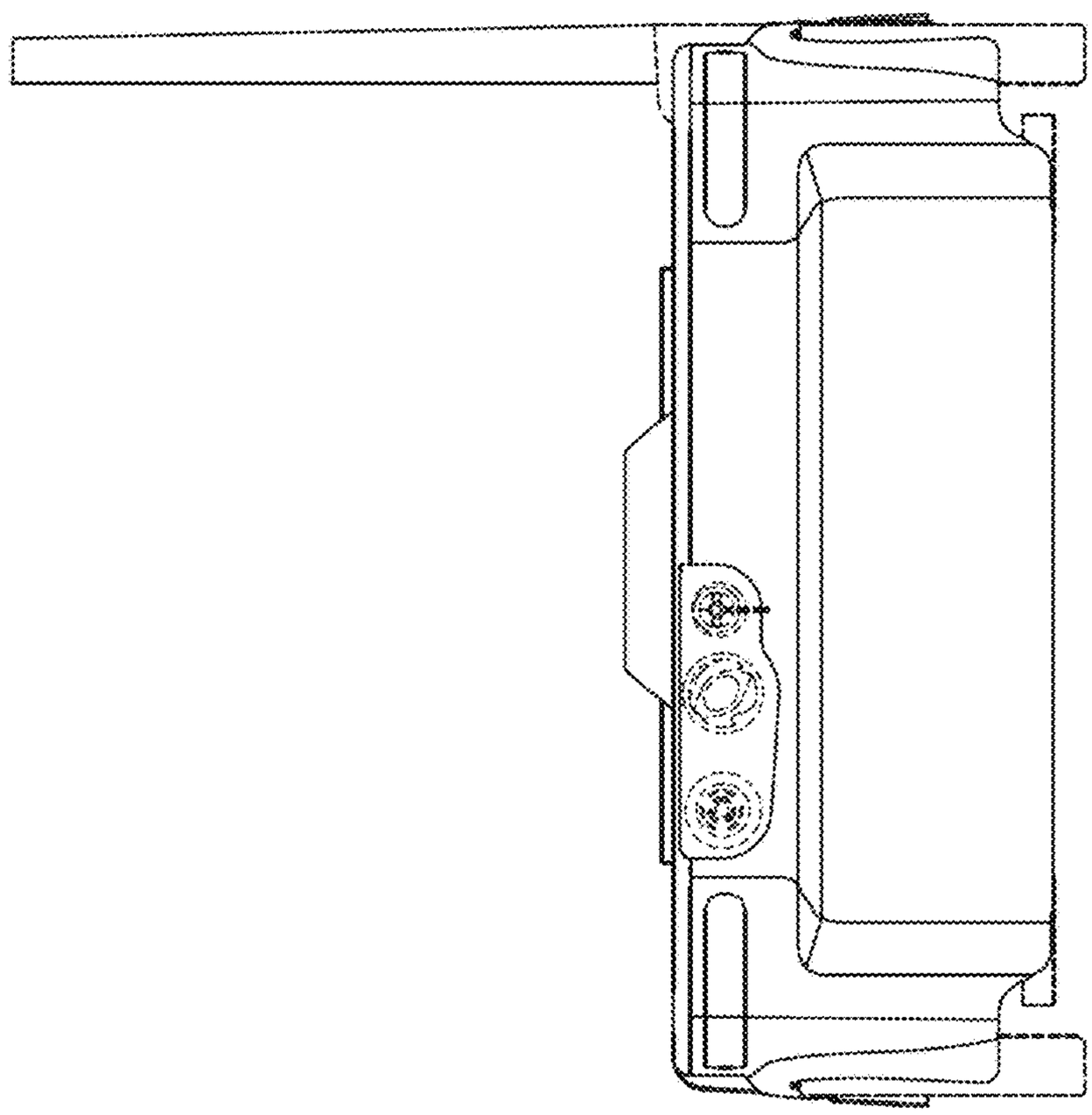

FIG.7

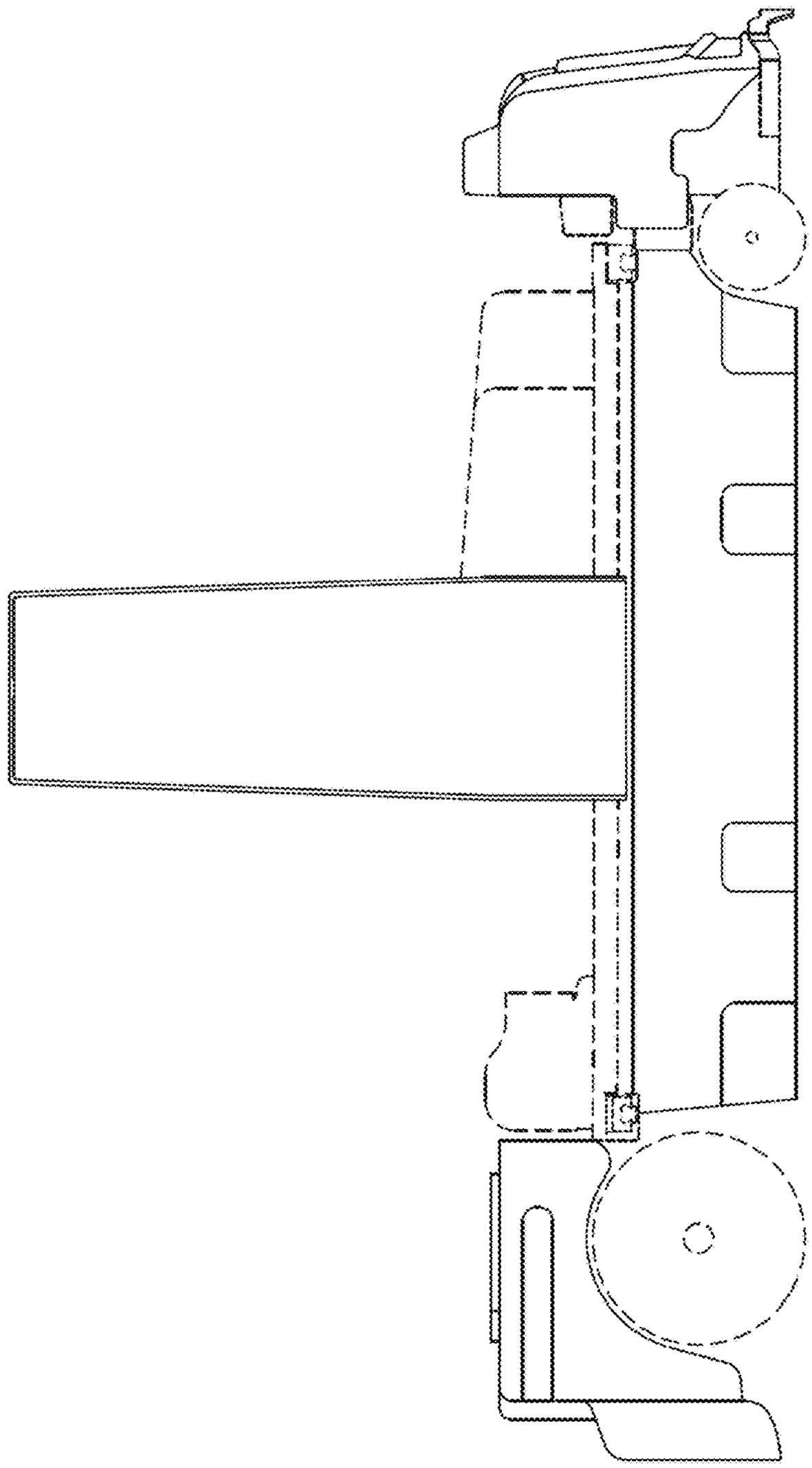

FIG.8