US00D857059S

(12) United States Design Patent

Taylor et al.

(10) Patent No.: US D857,059 S
(45) Date of Patent: ** Aug. 20, 2019

(54) **AVIONICS DISPLAY WITH ICON**

(71) Applicant: **Rockwell Collins, Inc.**, Cedar Rapids, IA (US)

(72) Inventors: **Max G. Taylor**, Hiawatha, IA (US); **Shawn M. Spencer**, Cedar Rapids, IA (US); **Jennifer A. Myren**, Marion, IA (US); **Matthew Jacob Cunnien**, Marion, IA (US); **Michael J. Armstrong**, Central City, IA (US); **Peter J. Flugstad**, Marion, IA (US); **Roy Allen Rhodes**, Marion, IA (US); **Ryan J. Olson**, Marion, IA (US); **Scott E. Schultz**, Cedar Rapids, IA (US)

(73) Assignee: **Rockwell Collins, Inc.**, Cedar Rapids, IA (US)

(**) Term: **15 Years**

(21) Appl. No.: **29/655,244**

(22) Filed: **Jul. 2, 2018**

Related U.S. Application Data

(62) Division of application No. 29/501,517, filed on Sep. 4, 2014, now Pat. No. Des. 822,060.

(51) **LOC (12) Cl.** **14-04**

(52) **U.S. Cl.**
USPC **D14/489**

(58) **Field of Classification Search**
USPC D14/485–495; D18/24–33; D20/10, 11, D20/22–33, 39, 40; D5/20, 26, 30, 40, D5/63–65

(Continued)

(56) **References Cited**

U.S. PATENT DOCUMENTS

D29,479 S 10/1898 Barth
D263,605 S 3/1982 Zborowsky

(Continued)

OTHER PUBLICATIONS

Lecture 1—Aerial Photogrammetry, by Virajain, slideshare.net [online], published on Jan. 18, 2014, [retrieved on Sep. 26, 2018], retrieved from the Internet <URL: https://www.slideshare.net/virajain/lecture-1aerial-photogrammetry> (Year: 2014).*

(Continued)

Primary Examiner — Cathron C Brooks
Assistant Examiner — Ian F Whitmore
(74) *Attorney, Agent, or Firm* — Angel N. Gerdzhikov; Donna P. Suchy; Daniel M. Barbieri

(57) **CLAIM**

The ornamental design for the avionics display with icon, as shown and described.

DESCRIPTION

A portion of the disclosure of this patent document contains material subject to copyright protection. The copyright owner has no objection to the facsimile reproduction by anyone of the patent document or the patent disclosure, as it appears in the Patent and Trademark Office patent file or records, but otherwise reserves all copyright rights whatsoever.

FIG. **1** is a front view of a portion of an avionics display with icon showing the claimed design; and,

FIG. **2** is a front view thereof, showing the solid line of the claimed design isolated from the broken-line depiction of a graphical user interface, for clarity of disclosure.

The outermost broken-line rectangle illustrates a portion of an avionics display and forms no part of the claimed design. The remaining broken lines illustrate portions of a graphical use interface and form no part of the claimed design.

The claimed design for an "avionics display with icon" is used as a visual instrument interface for assisting spatial awareness of loading and unloading position, and the position of other aircraft.

1 Claim, 2 Drawing Sheets

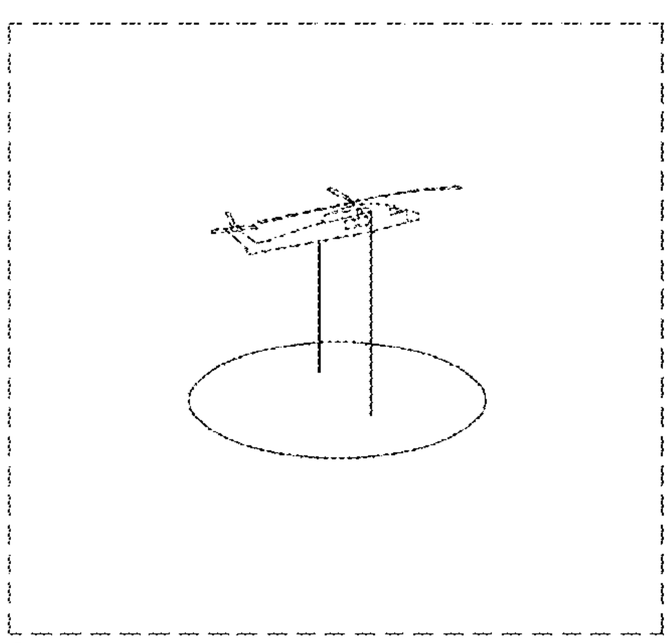

© Rockwell Collins, Inc.

(58) **Field of Classification Search**
CPC G06F 3/048–3/04897; G06F 17/50; G06F 3/033; G06F 17/30061; A63F 2300/66; A63F 2300/8082; H04L 29/08684; G01C 21/36
See application file for complete search history.

(56) **References Cited**

U.S. PATENT DOCUMENTS

5,415,549	A	5/1995	Logg	
5,425,109	A *	6/1995	Saga	G06F 3/04845 345/441
5,490,241	A	2/1996	Mallgren et al.	
D406,263	S	3/1999	Wilsher	
D432,100	S	10/2000	Zink et al.	
6,184,860	B1	2/2001	Yamakawa	
D448,422	S	9/2001	Fredriksson	
6,334,211	B1 *	12/2001	Kojima	G06F 8/34 717/128
D459,362	S	6/2002	Platz et al.	
D466,904	S	12/2002	McIntosh	
6,657,627	B1	12/2003	Wada et al.	
D547,365	S	7/2007	Reyes et al.	
D568,336	S	5/2008	Miglietta et al.	
D580,947	S	11/2008	Onai et al.	
7,516,416	B2 *	4/2009	Viswanathan	A61B 6/548 715/769
D598,029	S	8/2009	Lara et al.	
D601,571	S	10/2009	Vu et al.	
D602,031	S *	10/2009	Vu	D14/485
D625,318	S	10/2010	Jasinski	
D644,241	S	8/2011	Lemay	
D647,128	S	10/2011	Lewis et al.	
D652,842	S	1/2012	Obama et al.	
D664,150	S	7/2012	Boyer et al.	
D667,429	S	9/2012	Wujcik et al.	
D669,088	S *	10/2012	Boyer	D14/486
D681,668	S	5/2013	Phelan	
D703,692	S	4/2014	Phelan	
8,803,727	B2	8/2014	Muensterer et al.	
8,826,113	B2 *	9/2014	Ludwig	G06F 17/246 715/212
D726,758	S	4/2015	Bourret et al.	
D727,335	S	4/2015	Allison et al.	
D729,819	S	5/2015	Beaty	
D758,395	S	6/2016	Gutierrez et al.	
D758,434	S	6/2016	Lee et al.	
D759,698	S	6/2016	Kirsch et al.	
D760,234	S	6/2016	Aoshima	
D761,313	S *	7/2016	Quinn	D14/492
D761,808	S *	7/2016	Quinn	D14/485
D761,834	S	7/2016	Debitsch et al.	
D763,301	S	8/2016	Murillo et al.	
D766,321	S	9/2016	Han et al.	
D768,184	S	10/2016	Mariet et al.	
D770,522	S	11/2016	Crone et al.	
D772,267	S	11/2016	Tanabe et al.	
D772,289	S	11/2016	Dzjind et al.	
D775,199	S	12/2016	Vulk et al.	
D778,949	S	2/2017	Han et al.	
D781,914	S	3/2017	Willis	
D782,502	S	3/2017	Wu	
D782,505	S *	3/2017	Miao	D14/485
D782,515	S	3/2017	Dzjind et al.	
D783,676	S	4/2017	Kim et al.	
D784,399	S	4/2017	Herrera et al.	
D792,894	S	7/2017	Dzjind et al.	
D794,649	S	8/2017	Niijima et al.	
D799,541	S *	10/2017	Greff	D14/490
D812,077	S	3/2018	Watanabe	
D815,665	S	4/2018	Li et al.	
D816,703	S	5/2018	Willis et al.	
D819,074	S *	5/2018	Chow	D14/489
D820,305	S	6/2018	Clediere	
D822,057	S	7/2018	Kim et al.	
D822,060	S *	7/2018	Taylor	D14/492
D824,932	S	8/2018	Joensson et al.	
D842,335	S *	3/2019	Taylor	D14/489
D844,022	S *	3/2019	Amin	D14/487
2004/0056859	A1	3/2004	Ohba et al.	
2004/0183697	A1	9/2004	Rogers et al.	
2006/0112335	A1	5/2006	Hofmeister et al.	
2007/0182590	A1	8/2007	Younkin	
2007/0222665	A1	9/2007	Koeneman	
2008/0036776	A1 *	2/2008	Niles	G06F 3/04815 345/474
2008/0040024	A1	2/2008	Silva	
2008/0111814	A1	5/2008	Sengamedu et al.	
2008/0180406	A1	7/2008	Plan et al.	
2008/0295037	A1 *	11/2008	Cao	G06F 3/0482 715/852
2009/0278850	A1 *	11/2009	Shinkawa	A63F 13/10 345/442
2010/0001998	A1	1/2010	Mandella et al.	
2010/0013860	A1 *	1/2010	Mandella	G01B 21/04 345/650
2010/0090968	A1	4/2010	Lee et al.	
2010/0194746	A1	8/2010	Barbina et al.	
2010/0204953	A1	8/2010	Onishi et al.	
2012/0151394	A1	6/2012	Locke	
2012/0313946	A1	12/2012	Nakamura et al.	
2013/0167001	A1	6/2013	De Angelis et al.	
2013/0229391	A1 *	9/2013	DiVerdi	G06F 3/0488 345/179
2013/0325316	A1	12/2013	Vos et al.	
2014/0024365	A1	1/2014	Mitchell	
2014/0081484	A1	3/2014	Covington et al.	
2014/0324253	A1	10/2014	Duggan et al.	
2015/0015481	A1	1/2015	Li	
2015/0020020	A1 *	1/2015	White	G06F 3/0482 715/783
2015/0177957	A1	6/2015	Bae et al.	
2017/0020301	A1	1/2017	Woolfson et al.	
2017/0097762	A1 *	4/2017	Sugano	G06F 3/04883
2018/0033195	A1 *	2/2018	Nagano	G06F 3/0487
2018/0095645	A1 *	4/2018	Subudhi	G06F 3/04845

OTHER PUBLICATIONS

Helpful Settings for Plotting 3D Solids in AutoCAD, autocadtips1.com [online], published on Jun. 19, 2014, [retrieved on Sep, 28, 2018], retrieved from the Internet <URL: https://autocadtips1.com/2014/06/19/helpful-settings-for-plotting-3d-solids-in-autocad/> (Year: 2014).*

Adaptive Control System for Autonomous Helicopter Slung Load Operations, by Bisgaard et al., sciencedirect.com [online], published on 2010-07-00, [retrieved on Feb. 7, 2018], retrieved from the Internet <URL: https://www.sciencedirect.com/science/article/pii/S0967066110000341> (Year: 2010).

Azimuth, maryrosaries.com [online], published Oct. 27, 2010, [retrieved Oct. 17, 2017], retrieved from the Internet <URL: http://www.maryrosaries.com/collaboration/index.php?title=File:Azimuth_003.svg.png>.

Geocentric Coordinates, by Mercator, wikipedia.org [online], published Dec. 18, 2011, [retrieved Oct. 17, 2017], retrieved from the Internet <URL: https://en.wikipedia.org/wiki/File:Geocentric_coordinates.svg>.

Symbol Sourcebook, by Dreyfuss, Van Nostrand Reinhold Company, Inc., New York, NY © 1972, p. 26-27.

Understanding Gyroscopes, by Van Belle, readingfeynman.org [online], published Jun. 9, 2014, [retrieved Oct. 16, 2017], retrieved from the Internet <URL: https://readingfeynman.org/tag/rotational-motion/>.

3DHelicopter Parking Simulator Games, 148apps.com [online], published on May 11, 2014, [retrieved on Feb. 7, 2018], retrieved from the Internet <URL: http://www.148apps.com/app/859930514/> (Year: 2014).

Trademark Registration Serial No. 72358041, May 1, 1966 (first use date), (Registrant) Liberty Plastics & Metals Corporation, Kentucky, Trademark Electronic Service System (TEES), 1966.

(56) **References Cited**

OTHER PUBLICATIONS

Trademark Registration Serial. No. 77758821, Aug. 31, 2007 (first use date), (Registrant) Women's Leadership Exchange LLC, New York, Trademark Electronic Service System (TEES), 2007.
Trademark Registration Serial. No. 78066750, Apr. 23, 2002 (first use date), (Registrant) Espinosa, Christopher Thomas, Texas, Trademark Electronic Service System (TEES), 2002.
Trademark Registration Serial. No. 72163407, Jan. 10, 1963 (first use date), (Registrant) Rocket Power Inc., Arizona, Trademark Electronic Service System (TEES), 1963.
Trademark Registration Serial. No. 71008670, Apr. 29, 1874 (first use date), (Registrant) Baldwins, Limited Corporation, Great Britain, Trademark Electronic Service System (TEES), 1874.
Trademark Registration Serial No. 73634879, Oct. 15, 1986 (first use date), (Registrant) Tai First Enterprises, Ltd, Taiwan, Trademark Electronic Service System (TEES), 1986.
Human Characters, iconswebsite.com [online], published on Mar. 24, 2012, [retrieved on Sep. 26, 2018], retrieved from the Internet http://iconswebsite.com/shutterstock-image/seo-3d-little-human-characters-x-4-with-parachutes-and-tablet-pad-computers-landing-on-target-people-series-98375066.html, 2012.
Simple Shape Icons, iconswebsite.com [online], published on Nov. 8, 2006, [retrieved on Sep. 27, 2018], retrieved from the internet http://iconswebsite.com/shutterstock-image/simple-shape-icons-light-version-2135935.html, 2006.
Black and White Vector Illustration of Parachutist, iconswebsite.com [online], published on Apr. 18, 2013, [retrieved on Sep. 27, 2018], retrieved from the internet http://iconswebsite.com/shutterstock-image/black-and-white-vector-illustration-of-parachutist-135520616.html, 2013.
Messaging Link Icon, by Icons8, iconarchive.com [online], published on Jul. 24, 2014, [retrieved on Sep. 26, 2018], retrieved from the internet http://www.iconarchive.com/show/ios7-icons-by-icons8/Messaging-Link-icon-html, 2014.
Lecture 1—Aerial Photogrammetry, by Virajain, slideshare.net [online], published on Jan. 18, 2014, [retrieved on Sep. 26, 2018], retrieved from the internet, https://www.slideshare.net/virajain/lecture-1aerial-photogrammetry, 2014.

* cited by examiner

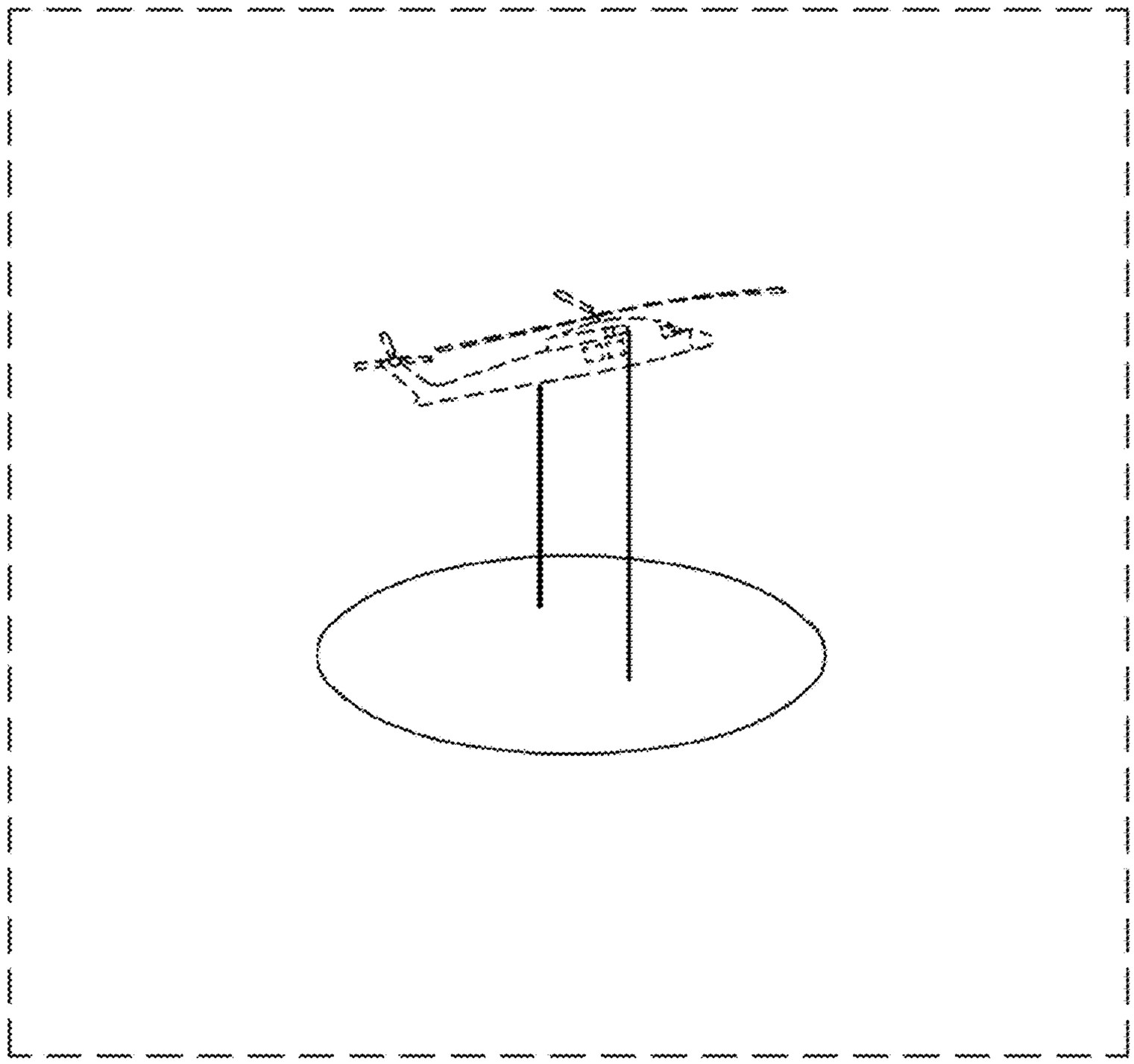

© Rockwell Collins, Inc.

FIG. 1

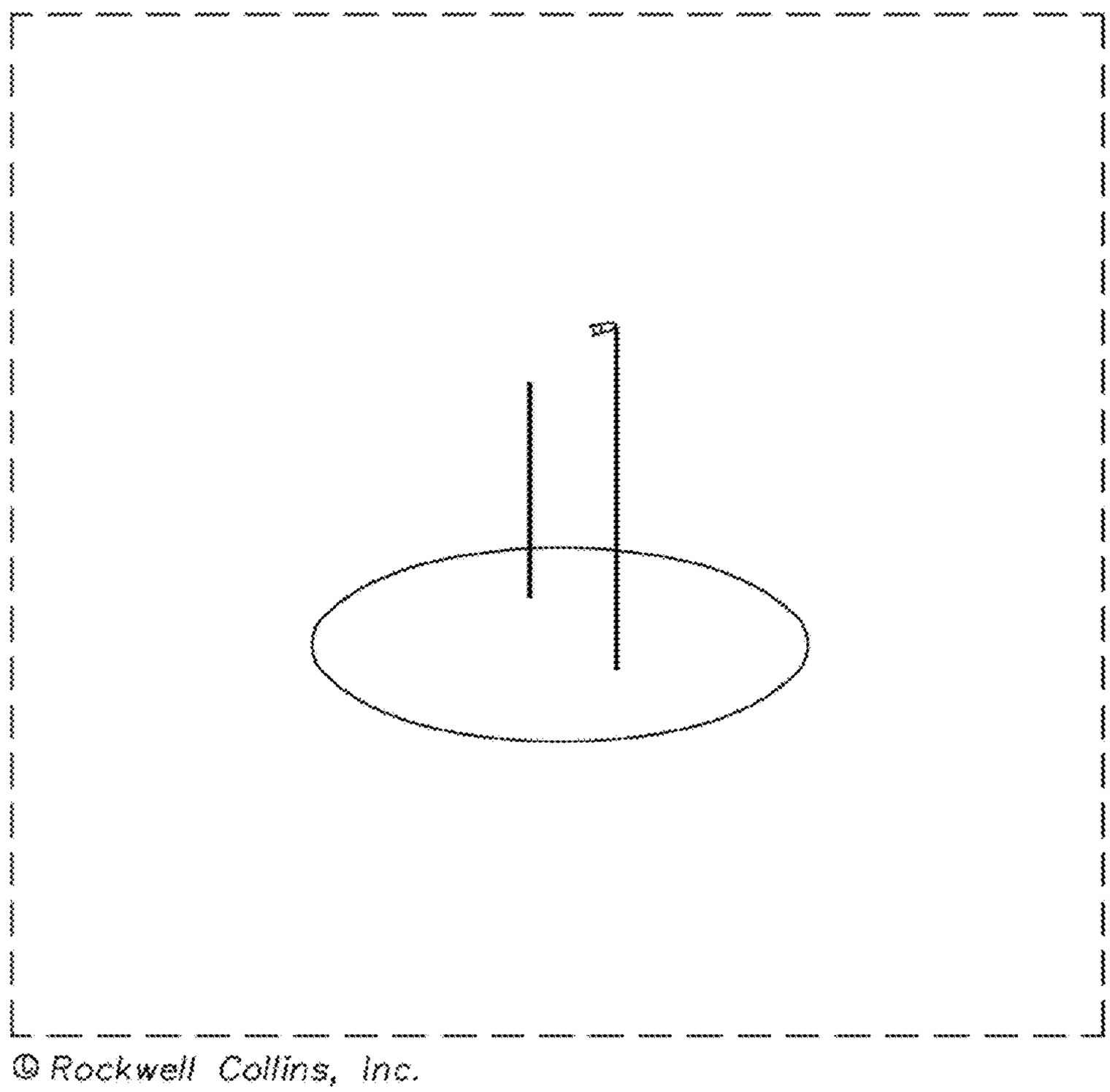

FIG. 2