US00D856467S

(12) United States Design Patent

Bishop

(10) Patent No.: US D856,467 S
(45) Date of Patent: ** Aug. 13, 2019

(54) **INSECT TRAP**

(71) Applicant: **Casey J. Bishop**, Redding, CA (US)

(72) Inventor: **Casey J. Bishop**, Redding, CA (US)

(**) Term: **15 Years**

(21) Appl. No.: **29/645,670**

(22) Filed: **Apr. 27, 2018**

(51) **LOC (12) Cl.** **22-06**

(52) **U.S. Cl.**
USPC **D22/122**

(58) **Field of Classification Search**
USPC D22/119–124; 43/107, 112–114, 122, 43/128, 131, 132.1, 133; 362/147; D26/1–4; D32/53.1, 54
CPC A01M 1/145; A01M 1/04; A01M 1/223; A01M 1/2016; A01M 2200/01; A01M 2200/011; A01M 2200/012
See application file for complete search history.

(56) **References Cited**

U.S. PATENT DOCUMENTS

4,876,822	A *	10/1989	White	A01M 1/145	43/113
D325,954	S *	5/1992	Lazzeroni, Sr.	D22/123	
D335,912	S *	5/1993	Brown	D22/119	
5,365,690	A *	11/1994	Nelson	A01M 1/145	43/113
D357,762	S *	4/1995	Douglas	D26/85	
5,651,211	A *	7/1997	Regan	A01M 1/145	43/113
D498,286	S *	11/2004	Loerakker	D22/122	
D589,585	S *	3/2009	Greening	D22/122	
8,572,890	B1 *	11/2013	Lark	A01M 1/145	43/113
D818,559	S *	5/2018	Freudenberg	D22/123	
D825,024	S *	8/2018	Wingett	D22/123	
D845,572	S *	4/2019	Pollard	D32/54	
2002/0032980	A1 *	3/2002	Nelson	A01M 1/145	43/113
2002/0078620	A1 *	6/2002	Nelson	A01M 1/04	43/113
2003/0089024	A1 *	5/2003	Nelson	A01M 1/145	43/113
2009/0288333	A1 *	11/2009	Johnston	A01M 1/145	43/113

* cited by examiner

Primary Examiner — Catherine R Oliver-Garcia
(74) *Attorney, Agent, or Firm* — Douglas L. Weller

(57) **CLAIM**

The ornamental design for an insect trap, as shown and described.

DESCRIPTION

FIG. **1** is a front right top perspective view of the insect trap.
FIG. **2** is a rear right top perspective view thereof.
FIG. **3** is a rear right top perspective view thereof.
FIG. **4** is a front elevational view thereof.
FIG. **5** is a rear elevational view thereof.
FIG. **6** is a right side elevational view thereof.
FIG. **7** is a left side elevational view thereof.
FIG. **8** is a top plan view thereof; and,
FIG. **9** is a bottom plan view thereof.
In the drawings, the broken lines are included only for the purpose of illustrating environment and form no part of the claimed design.

1 Claim, 4 Drawing Sheets

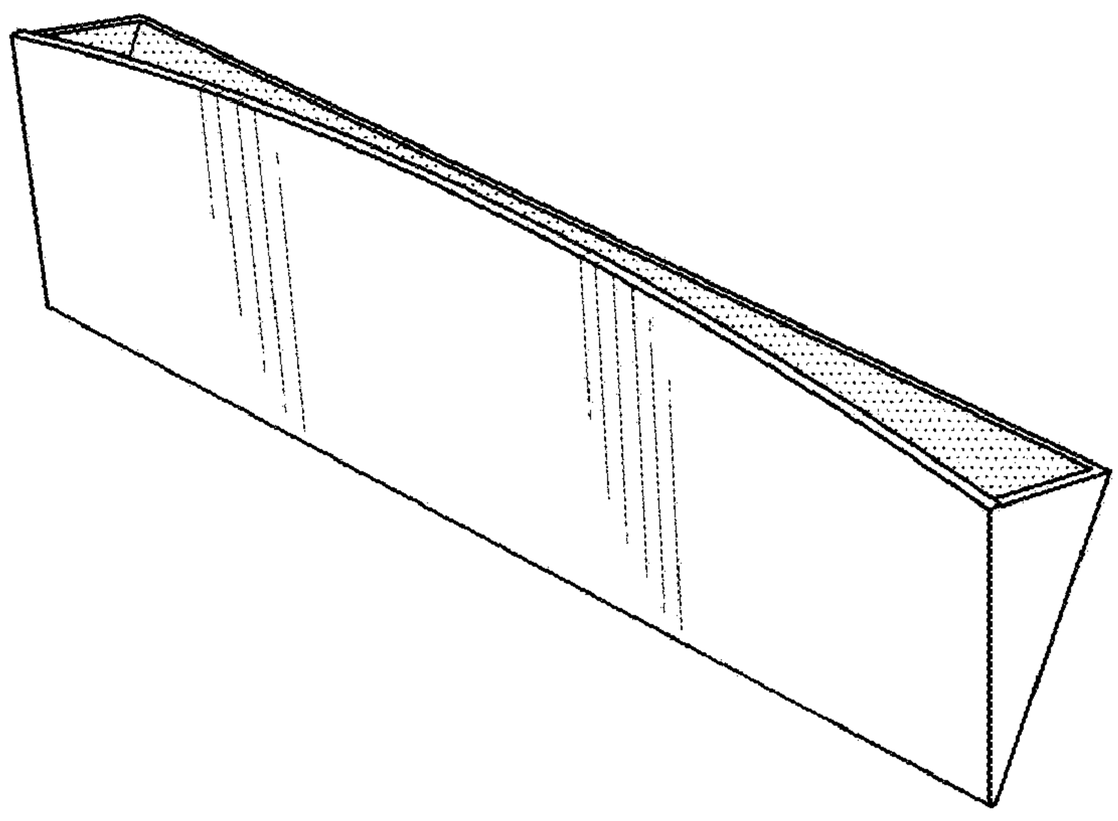

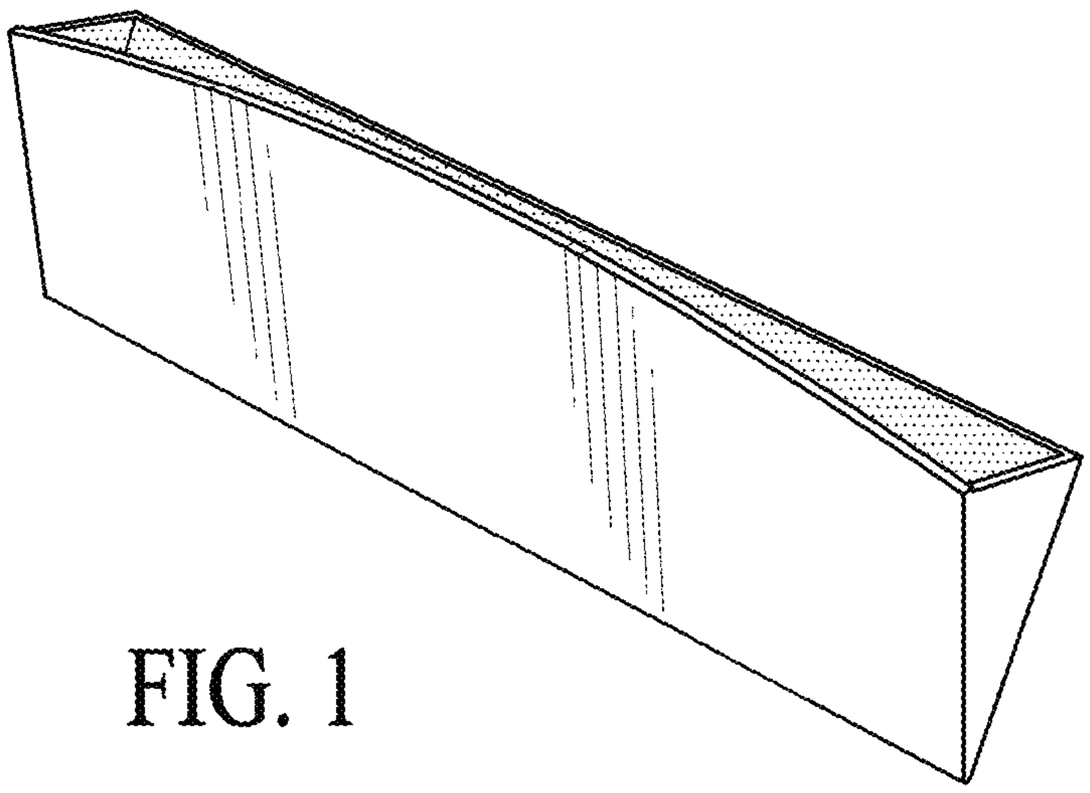

FIG. 1

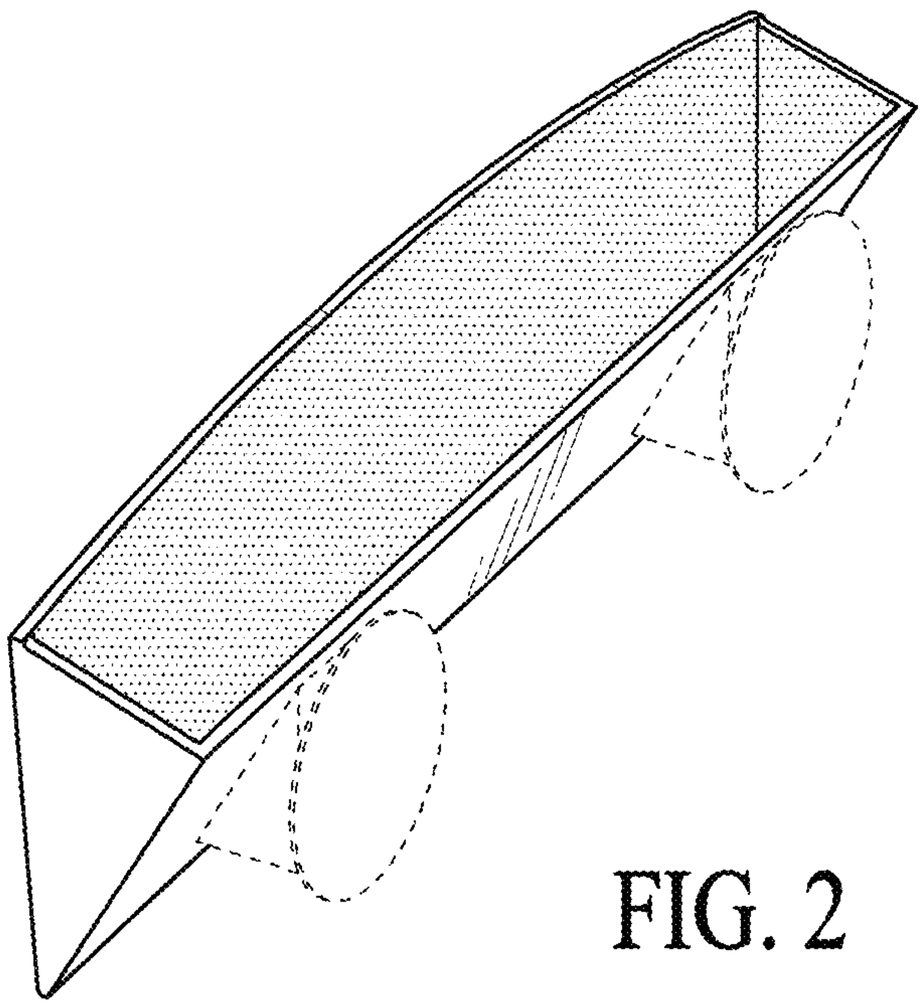

FIG. 2

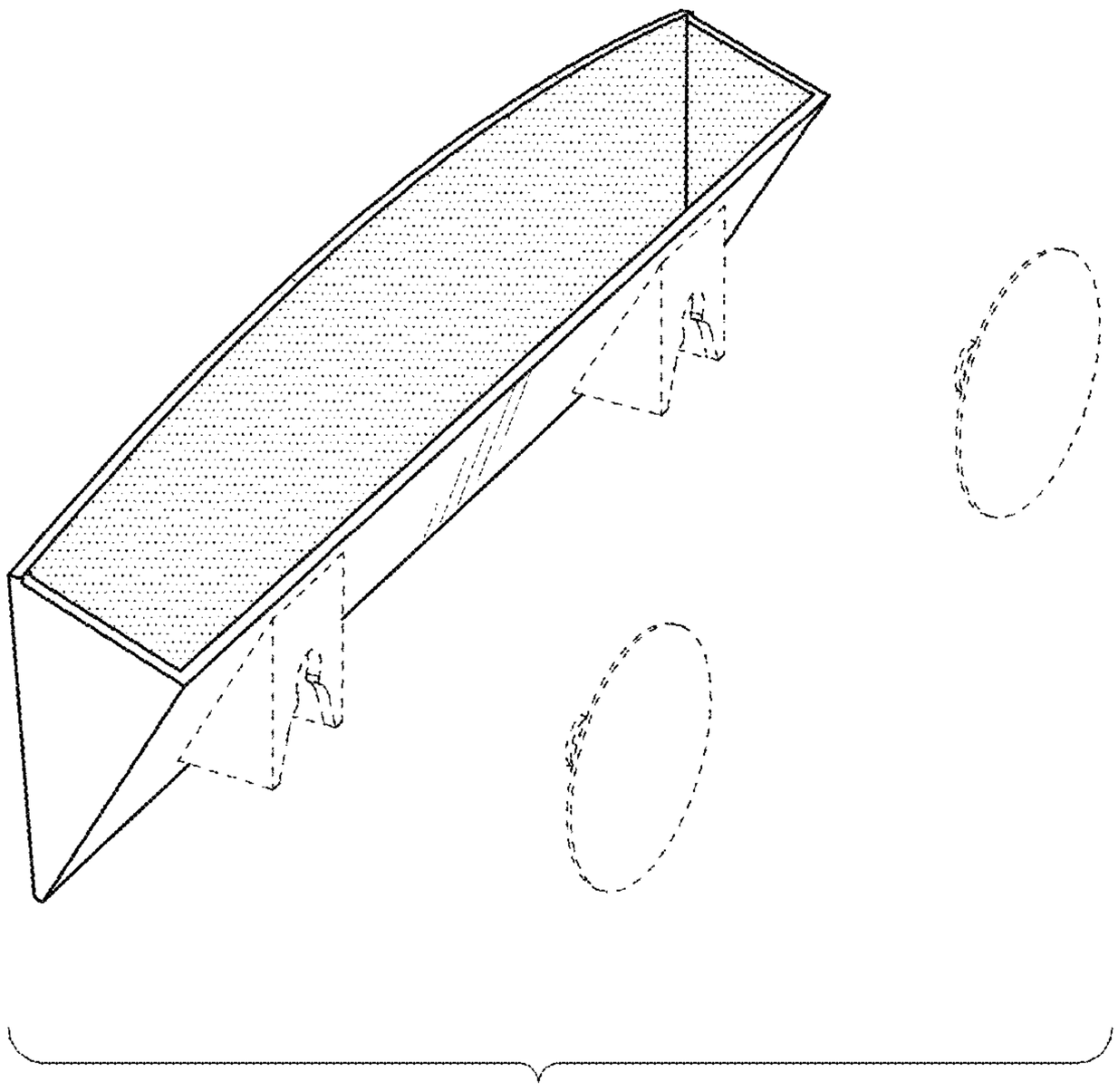

FIG. 3

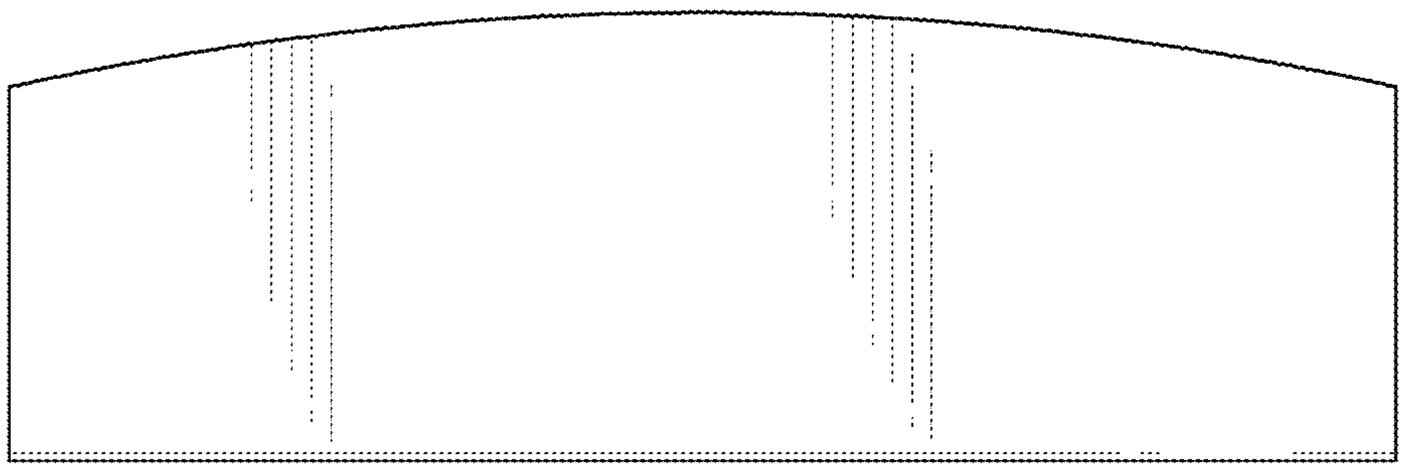

FIG. 4

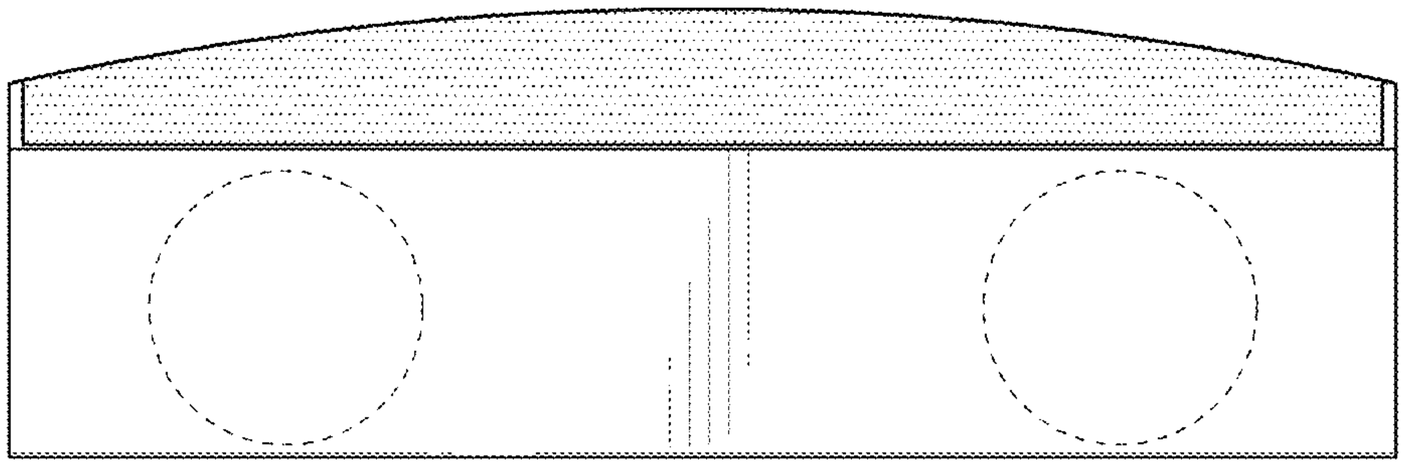

FIG. 5

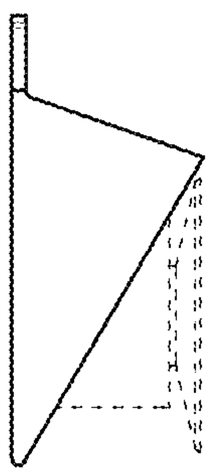

FIG. 6

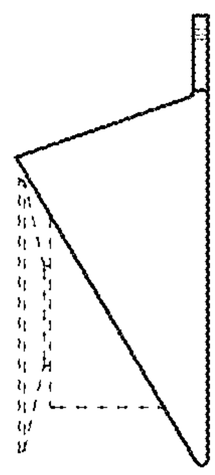

FIG. 7

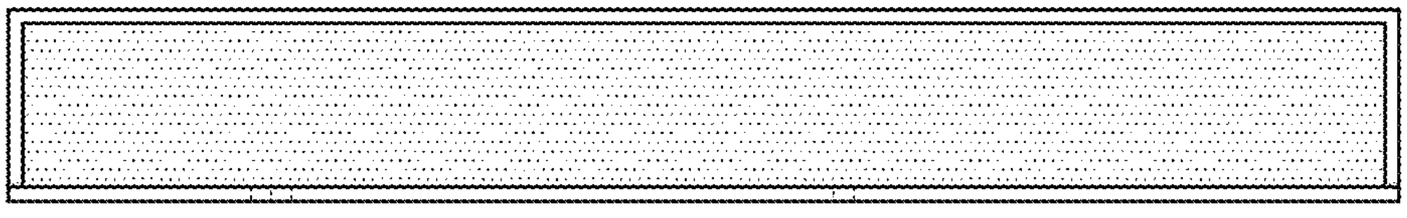

FIG. 8

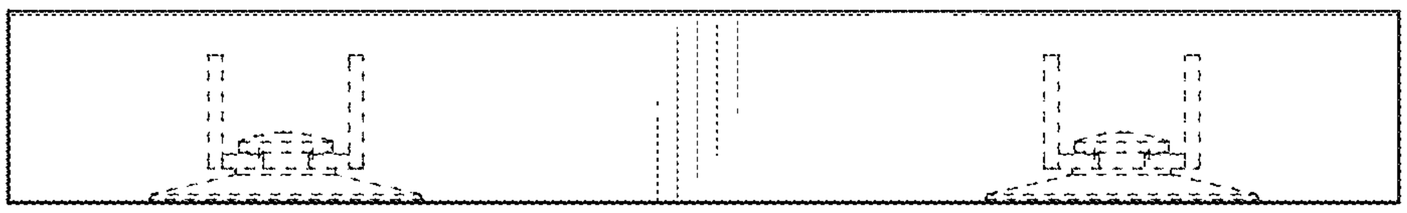

FIG. 9