US00D856442S

(12) United States Design Patent

Haquet et al.

(10) Patent No.: US D856,442 S
(45) Date of Patent: ** Aug. 13, 2019

(54) **EXERCISE APPARATUS**

(71) Applicant: **DECATHLON**, Villeneuve d'Ascq (FR)

(72) Inventors: **Sebastien Haquet**, Croix (FR); **Charles Cambianica**, Roubaix (FR); **Dorian Hernould**, Marquette (FR)

(73) Assignee: **DECATHLON**, Villeneuve d'Ascq (FR)

(**) Term: **15 Years**

(21) Appl. No.: **29/625,297**

(22) Filed: **Nov. 8, 2017**

(30) **Foreign Application Priority Data**

Jul. 13, 2017 (EM) 004101954-0006

(51) **LOC (12) Cl.** **21-02**

(52) **U.S. Cl.**
USPC **D21/662**

(58) **Field of Classification Search**
USPC .. 482/40, 93, 94, 95, 98, 99, 100, 101, 104, 482/121, 140, 142, 143, 144, 145; D12/178; D21/662, 673, 675, 676, 686, D21/690, 691, 694; D6/552
CPC ... A63B 21/0442; A63B 21/078; A63B 21/16; A63B 21/4033; A63B 23/02
See application file for complete search history.

(56) **References Cited**

U.S. PATENT DOCUMENTS

D299,843	S	*	2/1989	Brentham	D21/673
4,867,143	A	*	9/1989	Morin	A61H 1/0218 482/144
4,974,832	A	*	12/1990	Dalebout	A63B 21/00069 482/138
D336,498	S	*	6/1993	Engel	D21/690
D337,361	S	*	7/1993	Engel	D21/676
D346,189	S	*	4/1994	Chen	D21/690
5,310,393	A	*	5/1994	Highsmith	A63B 21/0615 482/148
D370,241	S	*	5/1996	Real	D21/690
D380,024	S	*	6/1997	Novak	D21/690
D394,482	S	*	5/1998	Colonello	D21/673
5,755,649	A	*	5/1998	Bimby	A63B 23/03533 482/121
5,769,766	A	*	6/1998	Huang	A63B 21/068 482/123
5,776,039	A	*	7/1998	Perez, Jr.	A63B 21/055 482/121
D397,745	S	*	9/1998	Wu	D21/668
D401,985	S	*	12/1998	Wheeler	D21/686
5,913,752	A	*	6/1999	Bolf	A63B 22/0076 482/112

(Continued)

Primary Examiner — Cynthia Ramirez
Assistant Examiner — Michael A Maharajh
(74) *Attorney, Agent, or Firm* — Fross Zelnick Lehrman & Zissu, P.C.; Charles T. J. Weigell, Esq.

(57) **CLAIM**

The ornamental design for an exercise apparatus, as shown and described.

DESCRIPTION

FIG. **1** is a front perspective view of an exercise apparatus showing our new design;
FIG. **2** is a front view thereof;
FIG. **3** is a back view thereof;
FIG. **4** is a left side view thereof;
FIG. **5** is a right side view thereof;
FIG. **6** is a top view thereof;
FIG. **7** is a bottom view thereof; and,
FIG. **8** is a rear perspective view thereof.
The broken lines in the drawings are for the purpose of illustrating portions of the exercise apparatus, which form no part of the claimed design.

1 Claim, 7 Drawing Sheets

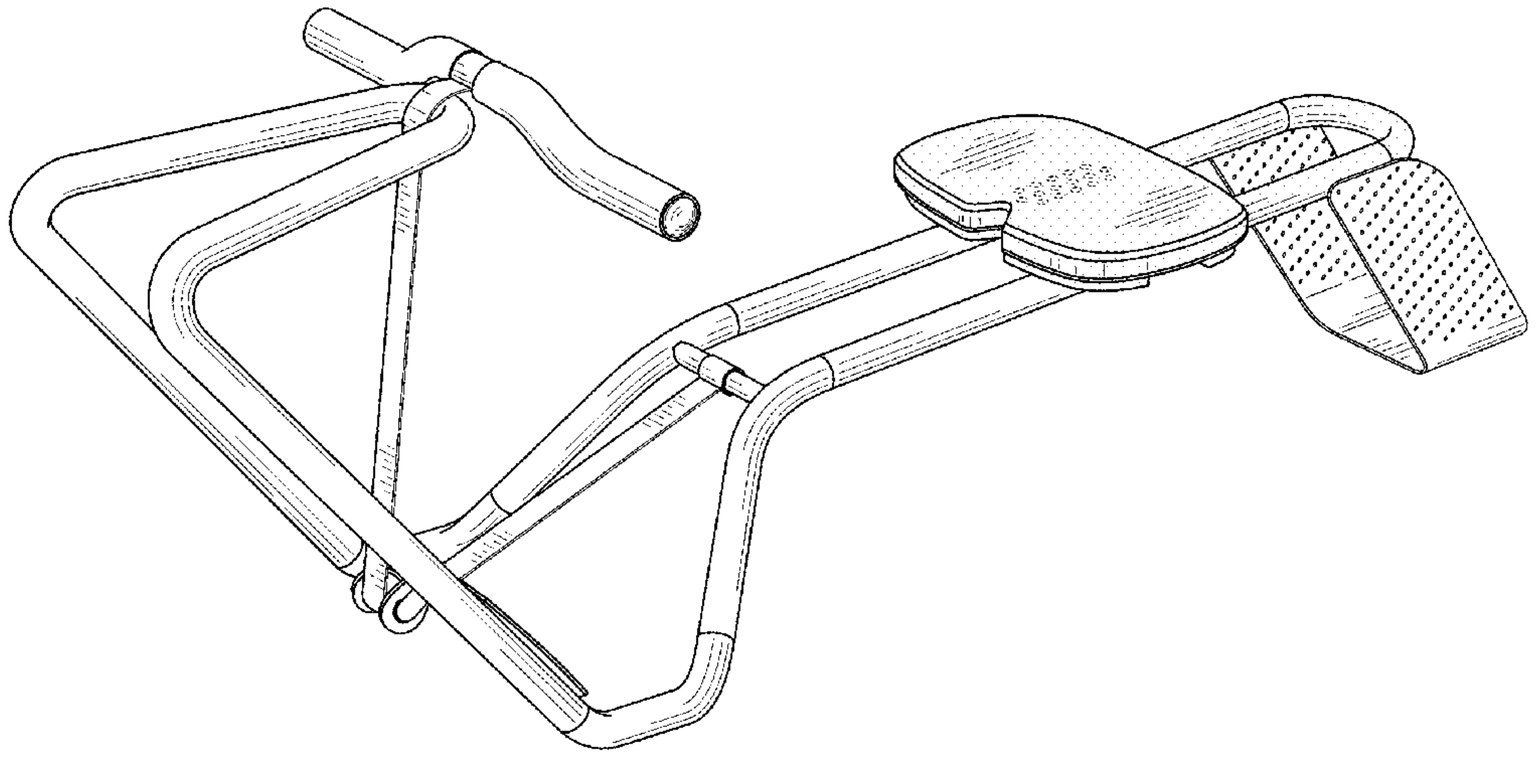

(56) **References Cited**

U.S. PATENT DOCUMENTS

D425,585	S *	5/2000	Wu	D21/673
6,149,552	A *	11/2000	Chen	A63B 22/14 482/51
6,290,630	B1 *	9/2001	Boland	A63B 21/0083 482/121
D476,384	S *	6/2003	Perez	D21/687
6,602,171	B1 *	8/2003	Tsen	A63B 21/023 482/140
D486,870	S *	2/2004	Mason	D21/662
6,716,144	B1 *	4/2004	Shifferaw	A63B 21/023 482/121
6,827,676	B2 *	12/2004	Kuo	A63B 21/04 482/121
6,923,749	B1 *	8/2005	Smith	A63B 21/00072 482/121
6,997,857	B2 *	2/2006	Bowman	A63B 23/0222 482/121
7,044,899	B2 *	5/2006	Kuo	A63B 21/055 482/121
7,108,642	B1 *	9/2006	Stearns	A63B 23/0211 482/121
7,137,934	B2 *	11/2006	Paramater	A63B 21/068 482/123
7,160,233	B2 *	1/2007	Perez	A63B 21/068 482/140
7,179,212	B2 *	2/2007	Hsiung	A63B 23/02 482/140
D541,356	S *	4/2007	Ayton	D21/686
D571,872	S *	6/2008	Batca	D21/691
D582,495	S *	12/2008	Lindblad	D21/690
D598,965	S *	8/2009	Augustine	D21/673
7,585,263	B2 *	9/2009	Brown	A63B 23/03525 482/140
D613,804	S *	4/2010	Perez	D21/691
D617,855	S *	6/2010	Leier	D21/686
D624,135	S *	9/2010	Tsai	D21/668
D650,025	S *	12/2011	Leier	D21/691
D650,026	S *	12/2011	Leier	D21/691
8,210,998	B2 *	7/2012	Chen	A63B 21/00181 482/130
D724,678	S *	3/2015	Miller, Jr.	D21/691
D729,887	S *	5/2015	Zeng	D21/686
D796,593	S *	9/2017	Ho	D21/688
2003/0130100	A1 *	7/2003	Perez	A63B 21/068 482/140

* cited by examiner

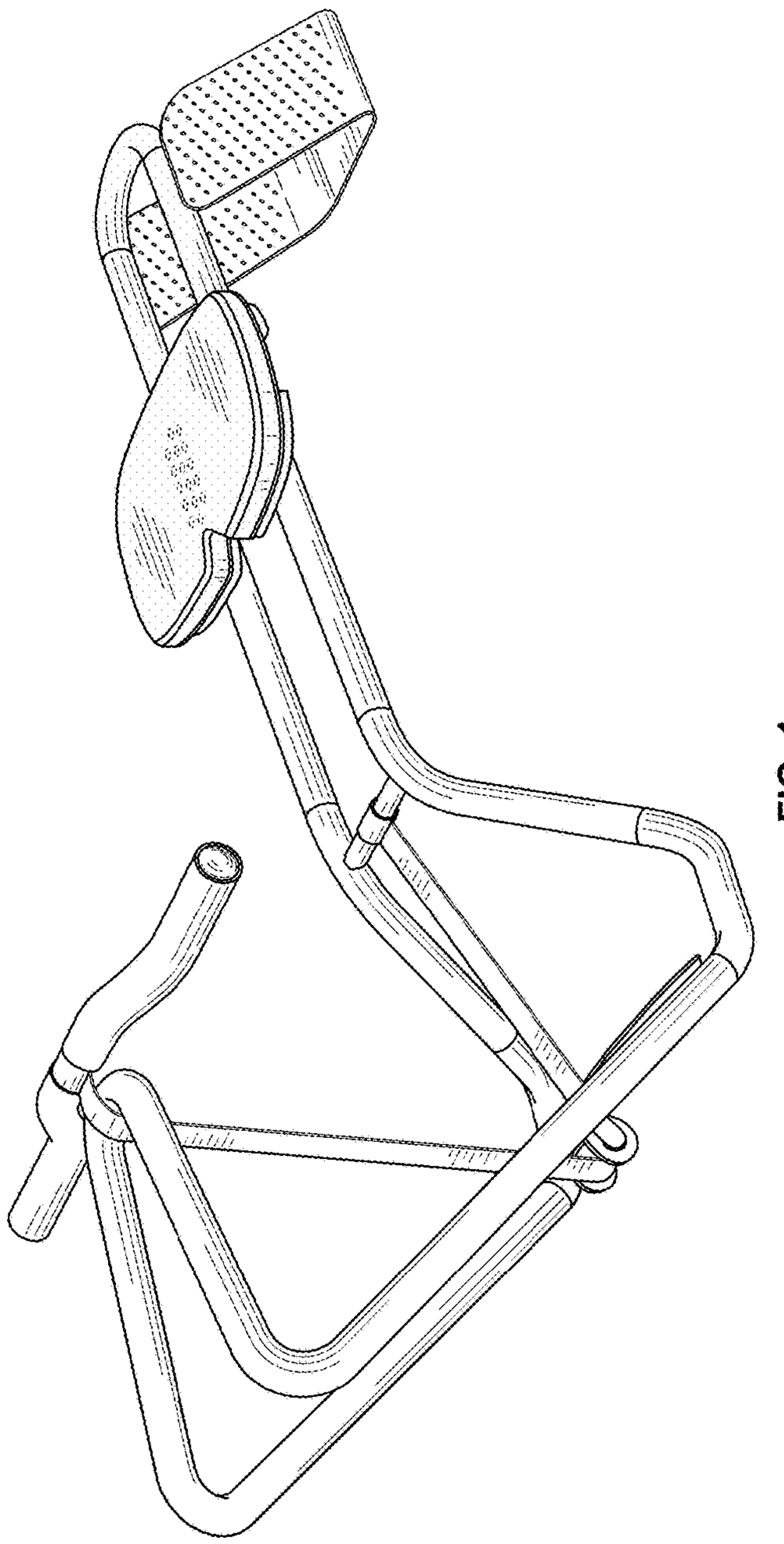

FIG. 1

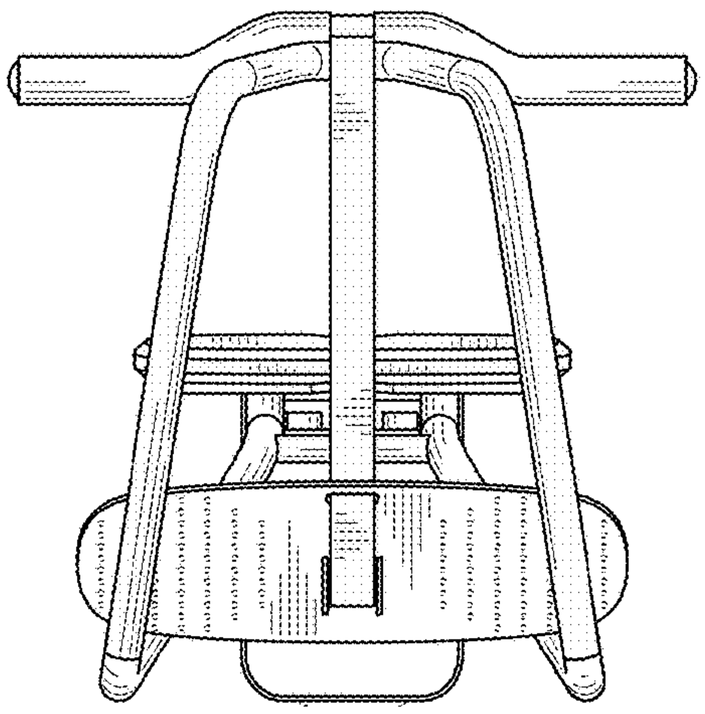

FIG. 2

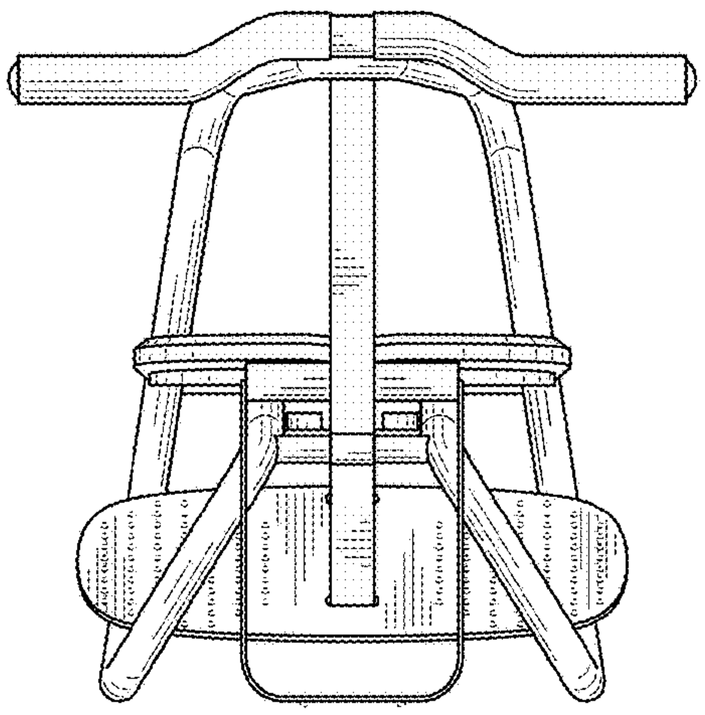

FIG. 3

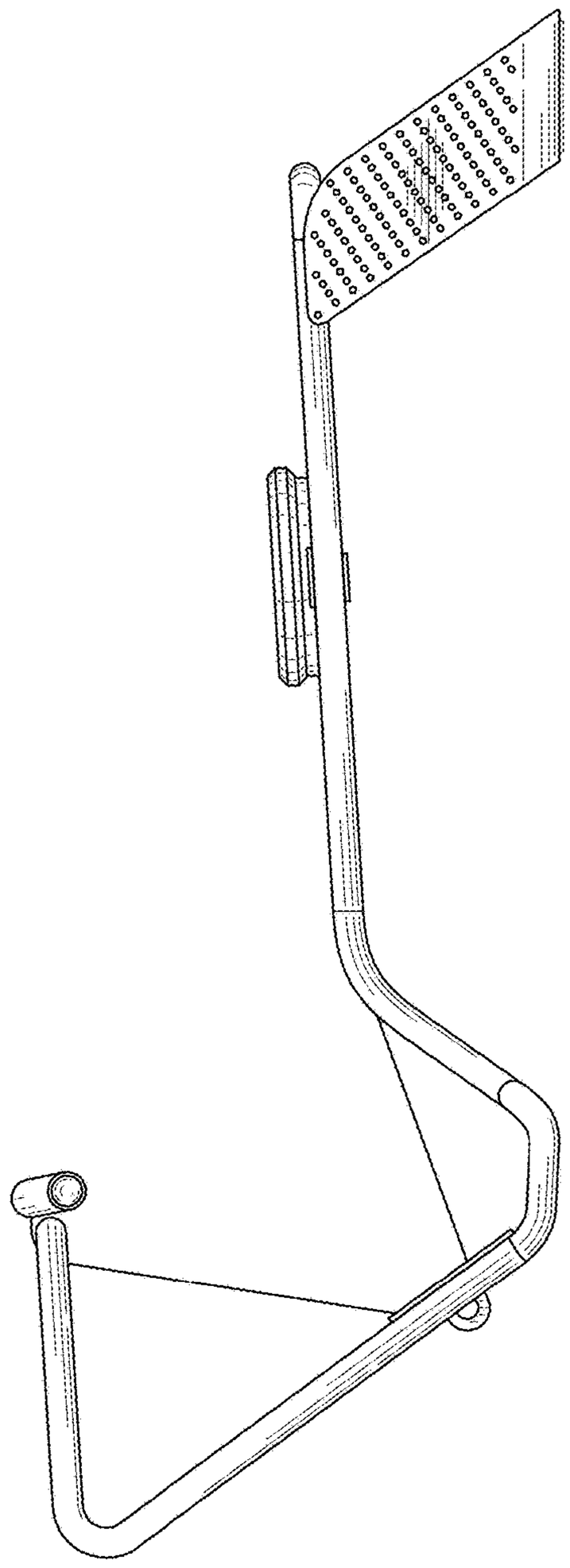

FIG. 4

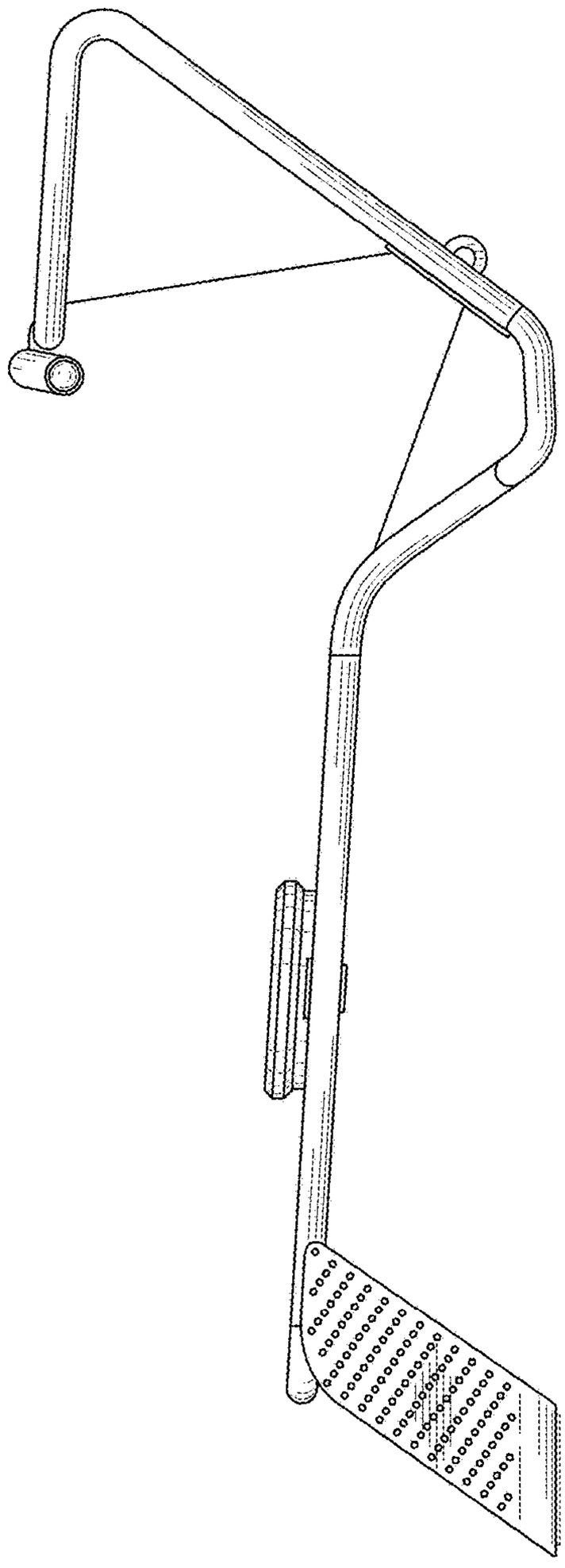

FIG. 5

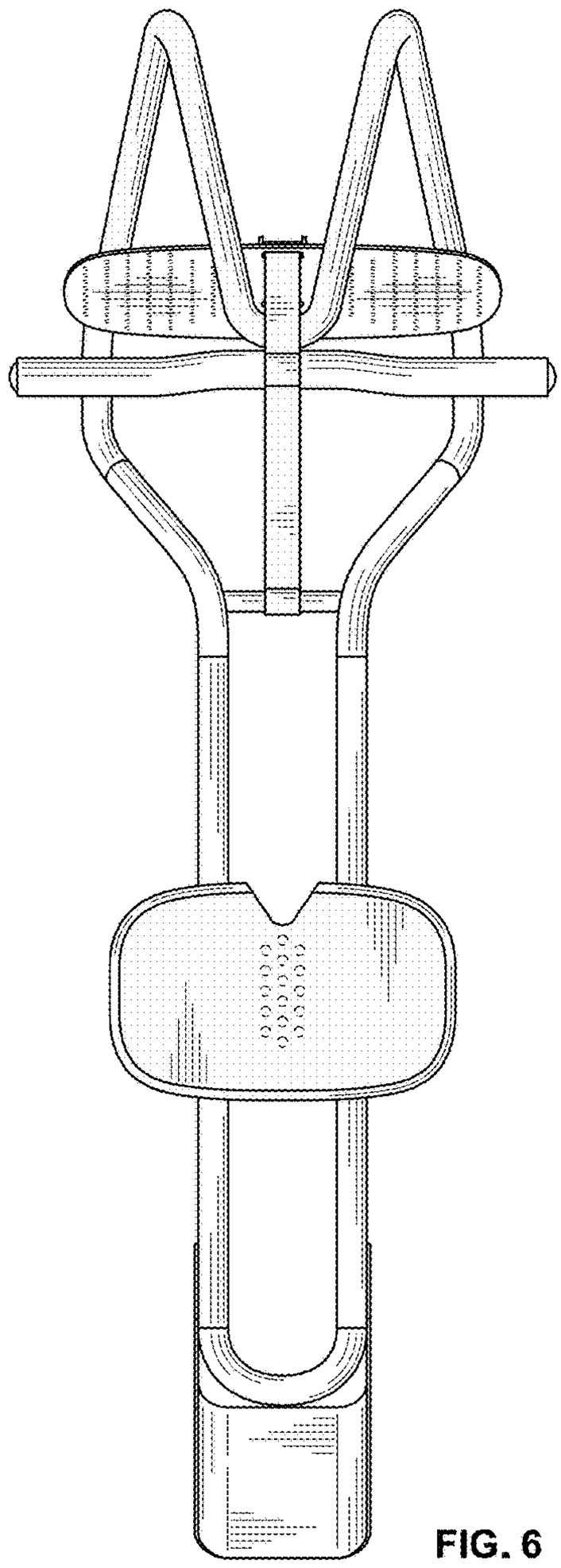

FIG. 6

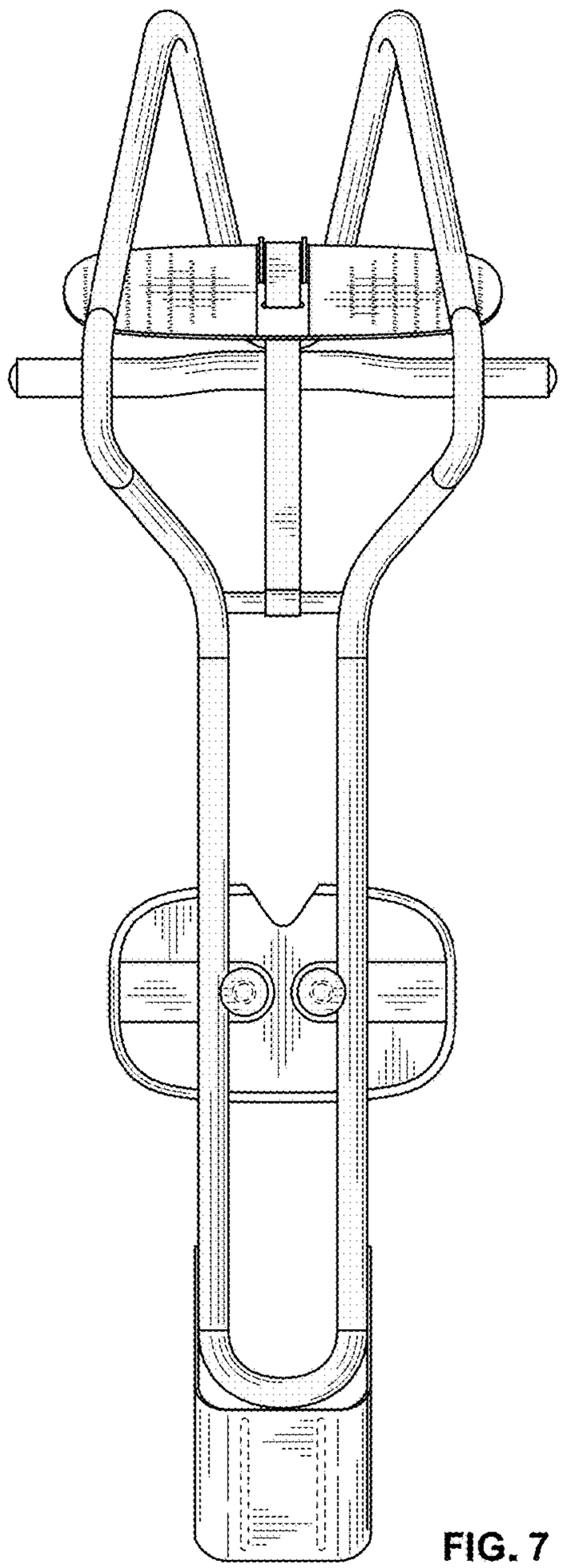

FIG. 7

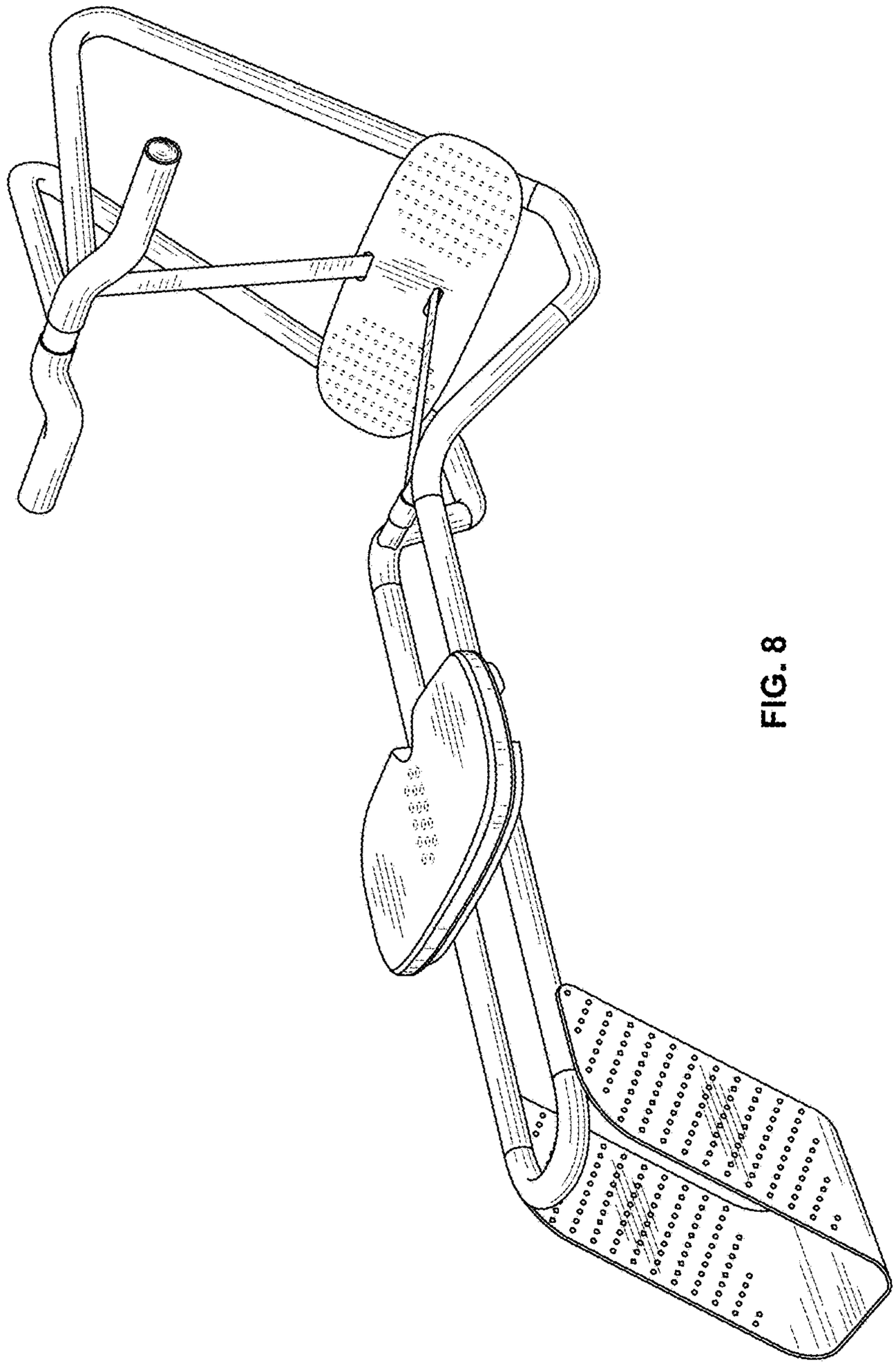

FIG. 8