US00D856421S

(12) United States Design Patent

Fan

(10) Patent No.: US D856,421 S
(45) Date of Patent: ** Aug. 13, 2019

(54) **PEN**

(71) Applicant: **Beifa Group Co., Ltd.**, Ningbo (CN)

(72) Inventor: **Yumeng Fan**, Ningbo (CN)

(73) Assignee: **Beifa Group Co., Ltd.**, Ningbo (CN)

(**) Term: **15 Years**

(21) Appl. No.: **29/625,603**

(22) Filed: **Nov. 10, 2017**

(30) **Foreign Application Priority Data**

May 12, 2017 (CN) 2017 3 0173285

(51) **LOC (12) Cl.** **19-06**

(52) **U.S. Cl.**
USPC **D19/166**; D19/167

(58) **Field of Classification Search**
USPC D19/115–204; D14/411
CPC . B43K 5/005; B43K 7/12; B43K 8/04; B43K 8/06; B43K 19/00; B43K 19/02; B43K 19/14; B43K 21/006; B43K 21/06
See application file for complete search history.

(56) **References Cited**

U.S. PATENT DOCUMENTS

D239,280	S	*	3/1976	Taylor	D19/195
D253,060	S	*	10/1979	Itoh	D19/167
D319,844	S	*	9/1991	Grotsch	D19/167
D391,294	S	*	2/1998	Izushima	D19/195
D423,576	S	*	4/2000	Stevens	D19/166
D426,573	S	*	6/2000	Sekine	D19/166
D523,083	S	*	6/2006	Furlong	D19/195
D530,748	S	*	10/2006	Kent	D19/195
D546,386	S	*	7/2007	Qiu	D19/166
D546,387	S	*	7/2007	Qiu	D19/166
D547,802	S	*	7/2007	Jeon	D19/166
D549,775	S	*	8/2007	Kent	D19/166
D612,426	S	*	3/2010	Suero, Jr.	D19/166
D629,846	S	*	12/2010	Losel	D19/175
D641,787	S	*	7/2011	Tan	D19/165
D647,961	S	*	11/2011	Zhang	D19/166
D648,385	S	*	11/2011	Guo	D19/166
D699,292	S	*	2/2014	Wang	D19/167
D699,296	S	*	2/2014	Wang	D19/195
D825,566	S	*	8/2018	Peterson	D14/411
D829,821	S	*	10/2018	Xie	D19/166

* cited by examiner

Primary Examiner — Elizabeth A. Albert
(74) *Attorney, Agent, or Firm* — Seed IP Law Group LLP

(57) **CLAIM**

The ornamental design for a pen, as shown and described.

DESCRIPTION

FIG. **1** is a front right perspective view of a pen showing my new design.
FIG. **2** is a front elevation view thereof.
FIG. **3** is a rear elevation view thereof.
FIG. **4** is a left side elevation view thereof, with the right side elevation view being a mirror image of the left side elevation view.
FIG. **5** is a top plan view thereof.
FIG. **6** is a bottom plan view thereof;
FIG. **7** is an enlarged top plan view thereof; and,
FIG. **8** is an enlarged bottom plan view thereof.

1 Claim, 3 Drawing Sheets

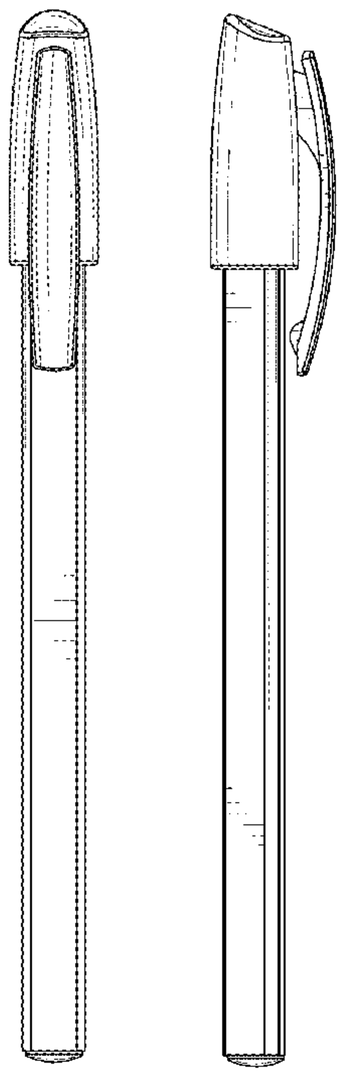

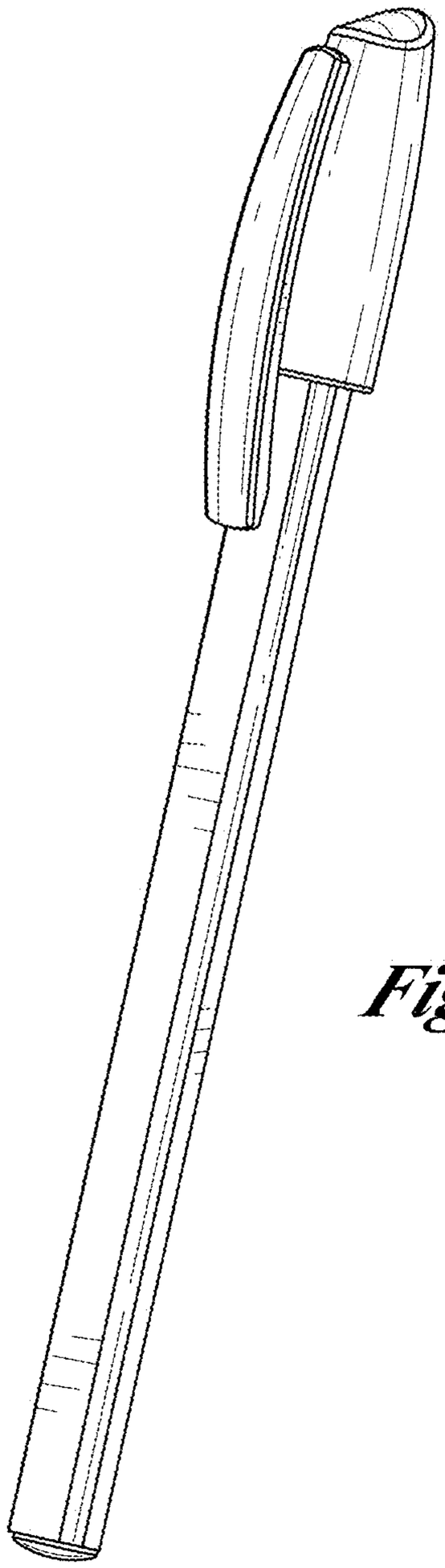

Fig. 1.

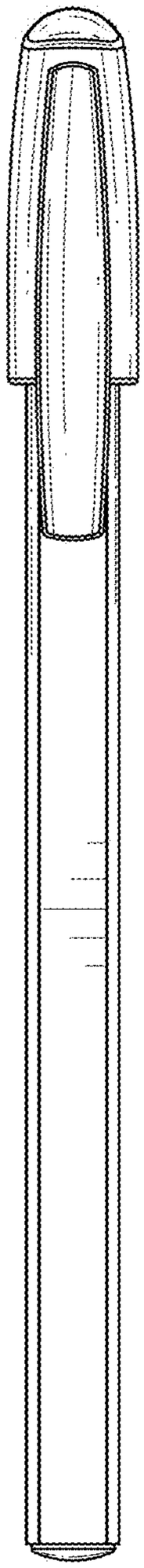

Fig.2.

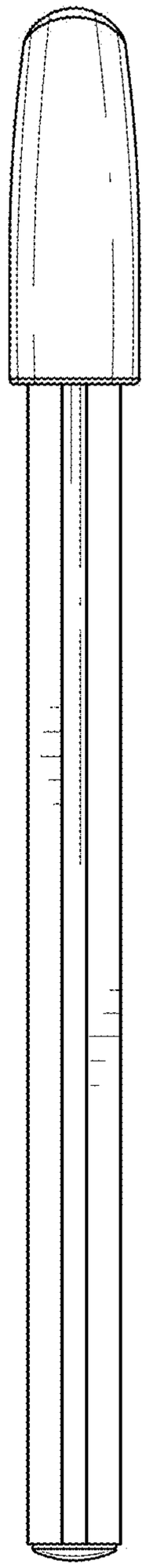

Fig.3.

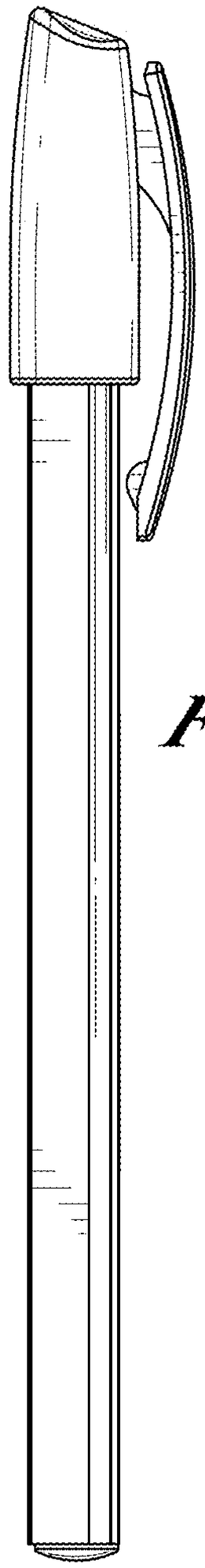

Fig.4.

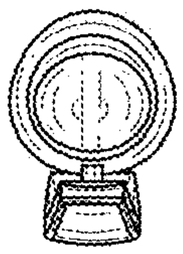

Fig. 5.

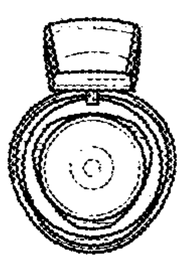

Fig. 6.

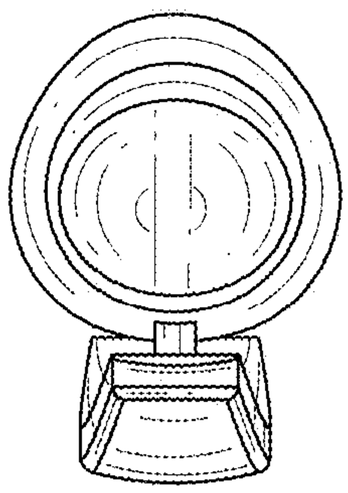

Fig. 7.

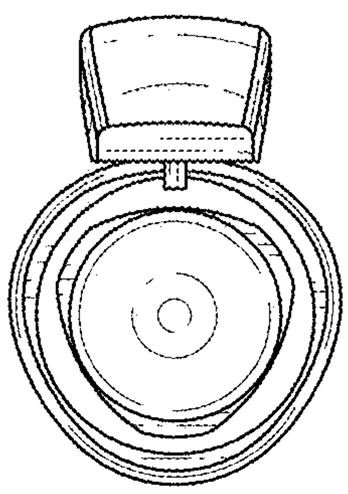

Fig. 8.