US00D853025S

(12) United States Design Patent
Washington

(10) **Patent No.: US D853,025 S**
(45) **Date of Patent: ** Jul. 2, 2019**

(54) **EYEBROW STAMP SYSTEM**

(71) Applicant: **Keirra Washington**, Ft. Worth, TX (US)

(72) Inventor: **Keirra Washington**, Ft. Worth, TX (US)

(**) Term: **15 Years**

(21) Appl. No.: **29/505,558**

(22) Filed: **Dec. 21, 2015**

(51) **LOC (11) Cl.** **28-03**

(52) **U.S. Cl.**
USPC **D28/7**; D28/78; D28/83

(58) **Field of Classification Search**
USPC D28/4, 7, 8, 9, 10; D18/14–18; D9/718, D9/721, 723, 725, 737, 414, 423, 624; D3/205, 901, 269, 271.1; 132/216, 218, 132/286, 315, 317, 320
CPC A45D 33/00; A45D 2033/001; A45D 33/006; A45D 33/04–33/28; A45D 33/34; A45D 33/36; A45D 40/22–2040/228; A45D 40/30; A45D 42/04; A45D 2200/25; A45D 44/00; A45D 2029/005
See application file for complete search history.

(56) **References Cited**

U.S. PATENT DOCUMENTS

1,851,462 A * 3/1932 Steller A45C 13/1084 132/294
2,056,935 A * 10/1936 Esterow A45D 33/006 132/301
D215,391 S * 9/1969 Mitchell D28/7
D307,331 S * 4/1990 Pflieger D28/7
D478,689 S * 8/2003 Thorpe D28/83
D561,540 S * 2/2008 Rhodes, II D7/653
D620,638 S * 7/2010 Nelson D28/4
D645,617 S * 9/2011 Mahdavi D28/64.3
D651,350 S * 12/2011 Paquet D28/83
2005/0217688 A1* 10/2005 Liu A45D 40/262 132/216
2013/0152962 A1* 6/2013 Pires A45D 33/006 132/313
2013/0220362 A1* 8/2013 Rogers A45D 33/008 132/301

(Continued)

OTHER PUBLICATIONS

Japonesque Brow Kit, posted at Ulta.com, posting date not given, © 2000-2016 Ulta Salon, [online], [site visited Sep. 27, 2016]. Available from Internet, <URL: http://www.ulta.com/brow-kit?productId=xlsImpprod2230223>.*

(Continued)

Primary Examiner — Catherine A Tuttle
Assistant Examiner — Mary Shannon Malley

(57) **CLAIM**

I claim the ornamental design for the eyebrow stamp system, as shown and described.

DESCRIPTION

FIG. **1**: is the perspective open lid elevation view of the eyebrow stamp system;
FIG. **2**: is the perspective closed lid elevation view thereof;
FIG. **3**: is the left side elevation view of the eyebrow stamp;
FIG. **4**: is the right elevation view thereof;
FIG. **5**: is the top elevation view thereof;
FIG. **6**: is the bottom elevation view thereof;
FIG. **7**: is the front elevation view of the carrying case;
FIG. **8**: is the back elevation view thereof;
FIG. **9**: is the side elevation view thereof;
FIG. **10**: is the top elevation view thereof; and,
FIG. **11**: is the bottom elevation view thereof.
Apart from the disclaimed areas, the surface contour is understood to follow the configuration as shown by the various outlines.

1 Claim, 11 Drawing Sheets

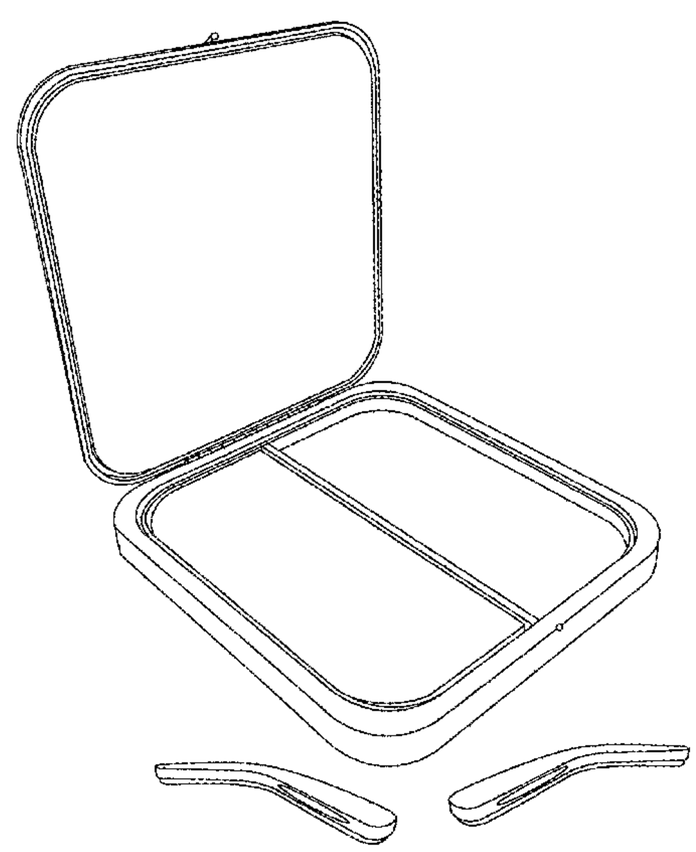

(56) **References Cited**

U.S. PATENT DOCUMENTS

2016/0081456 A1* 3/2016 Grund A45D 34/06
132/200

OTHER PUBLICATIONS

i-Envy by Kiss Brow Stamp for Perfect Eyebrow, posted at Amazon.com, posting date not given, © 1996-2016, Amazon.com, [online], [site visited Sep. 26, 2016]. Available from Internet, <URL: https://www.amazon.com/i-Envy-Kiss-Perfect-Eyebrow-KPBS01/dp/B01H7YIH7O/ref=sr_1_1_a_it?ie=UTF8&qid=1474916768&sr=8-1&keywords=ienvy%2Bkiss%2Bperfect&th=1>.*

* cited by examiner

Fig. 1

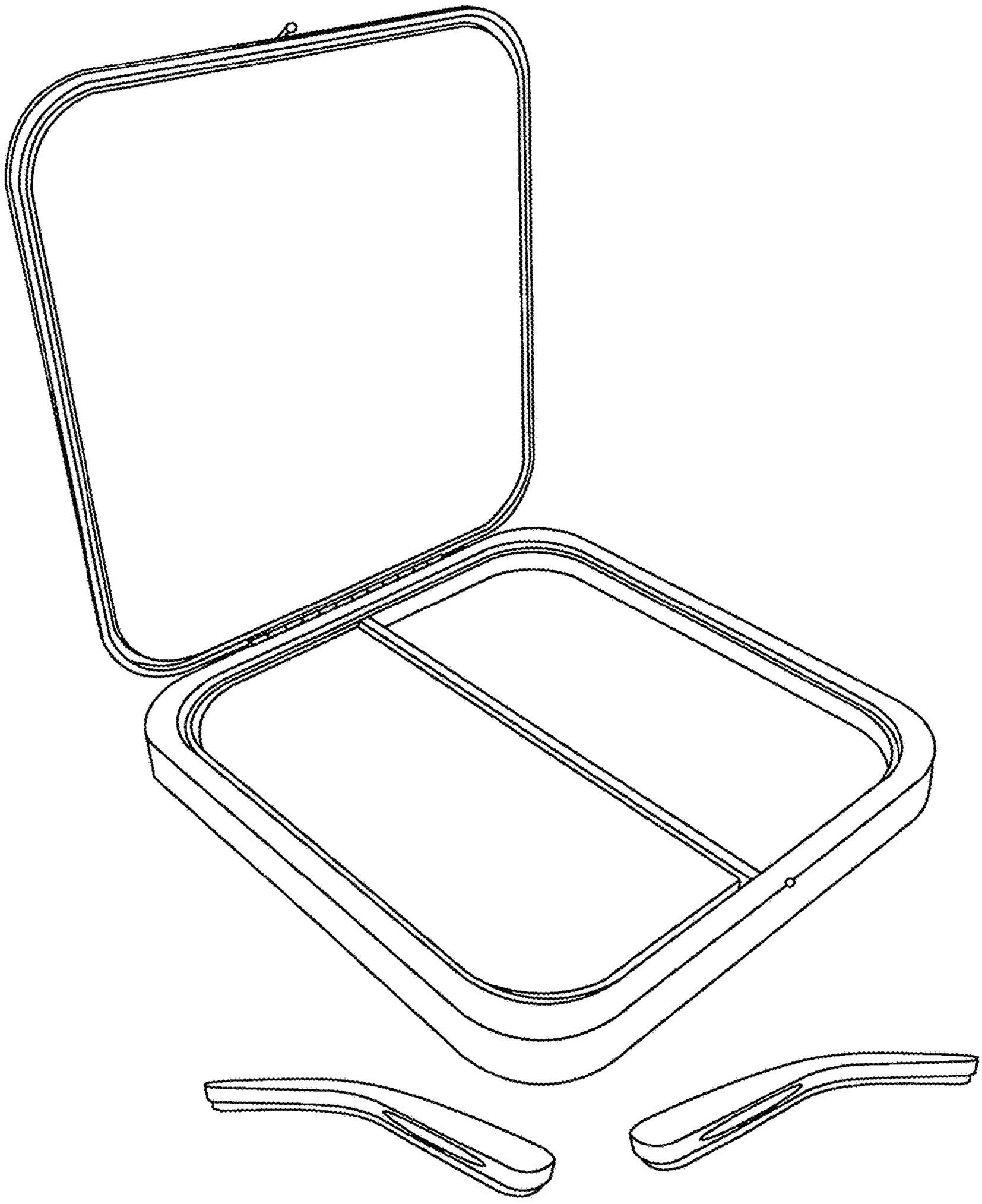

Fig. 2

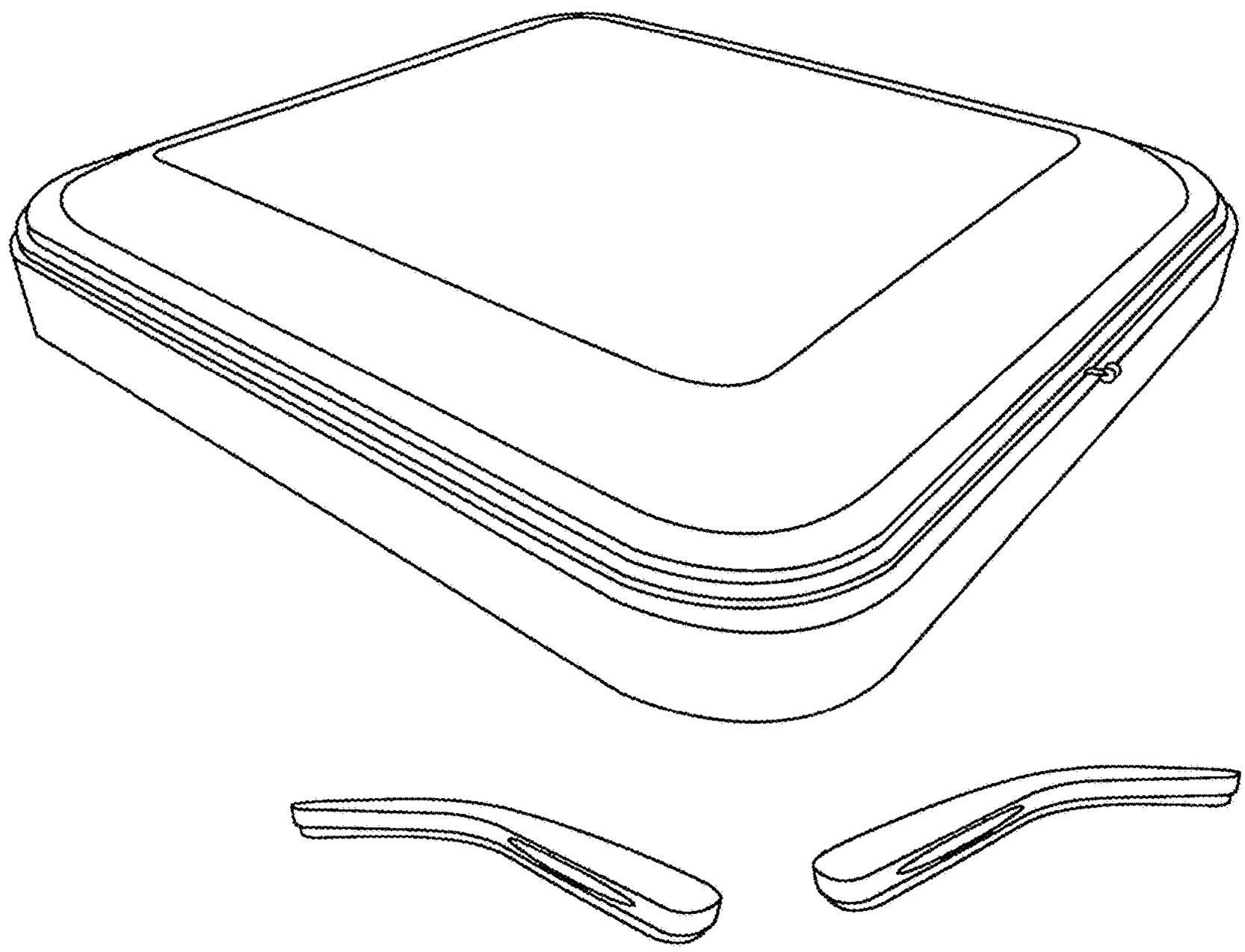

Fig. 3

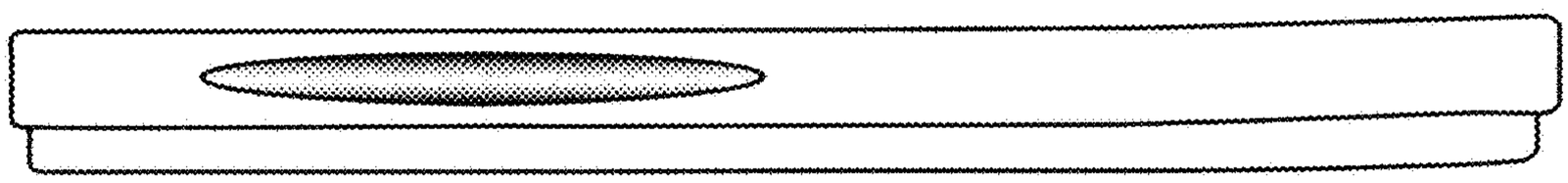

Fig. 4

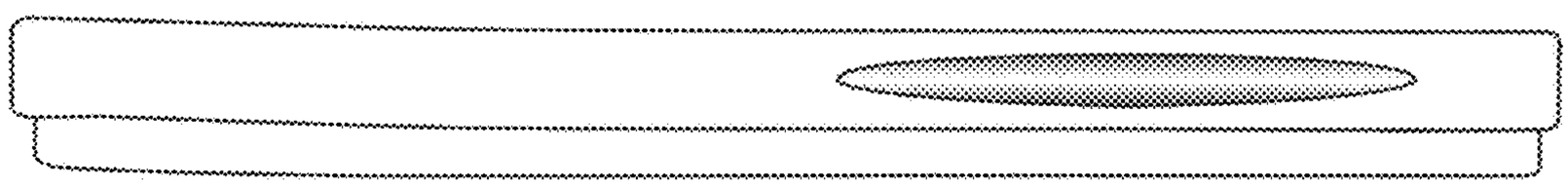

Fig. 5

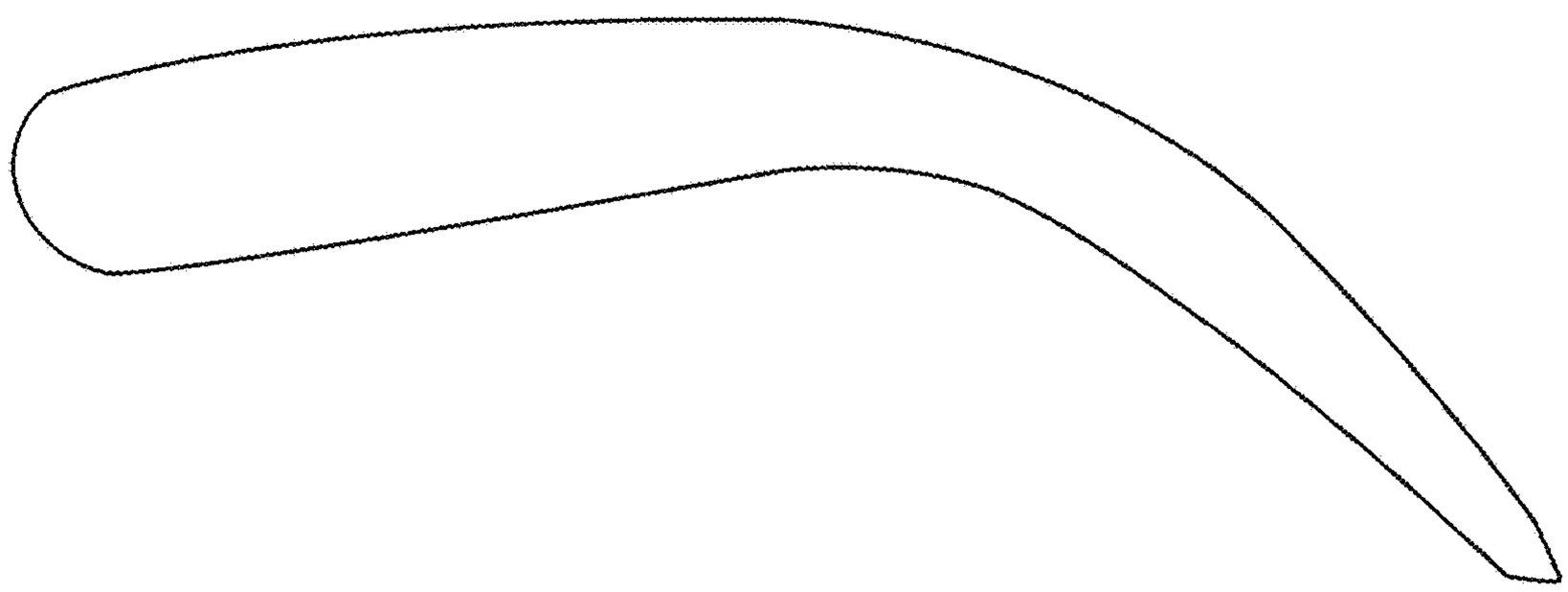

Fig. 6

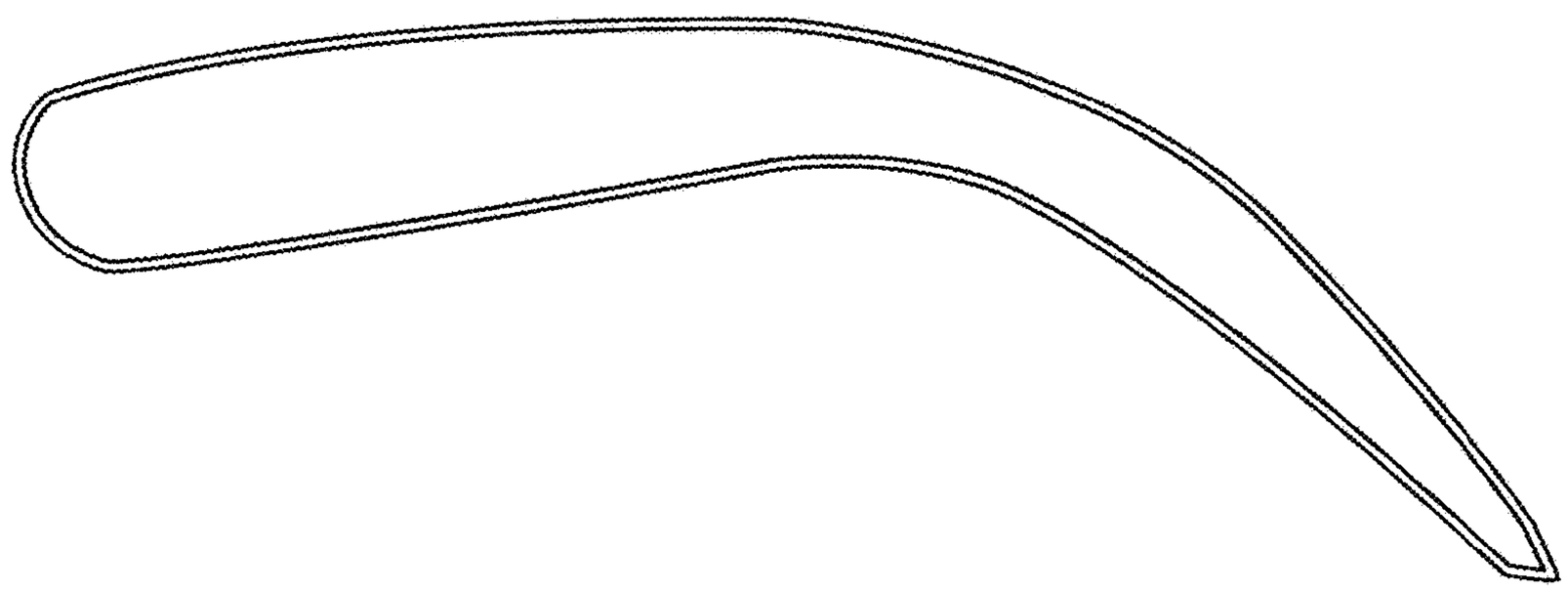

Fig. 7

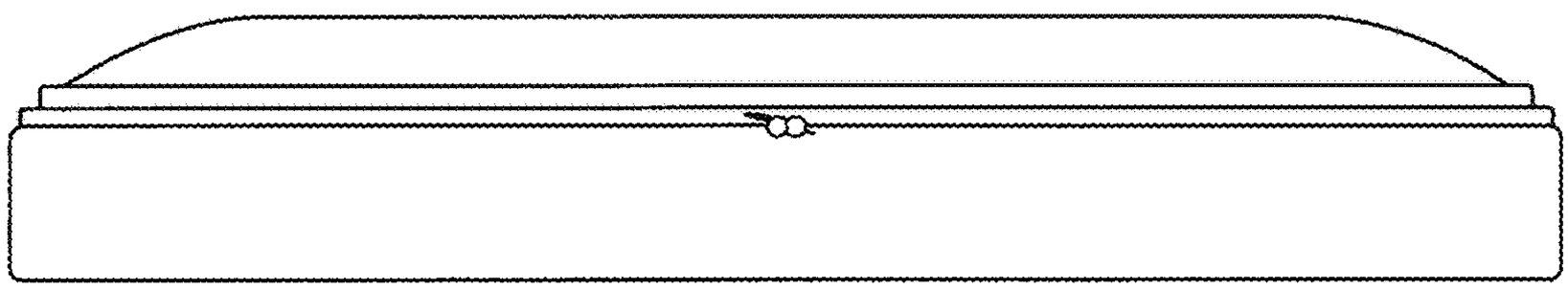

Fig. 8

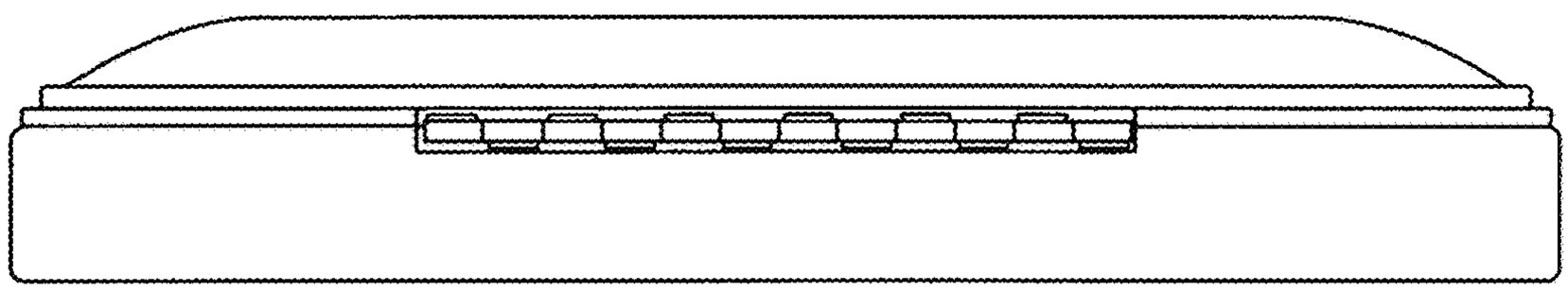

Fig. 9

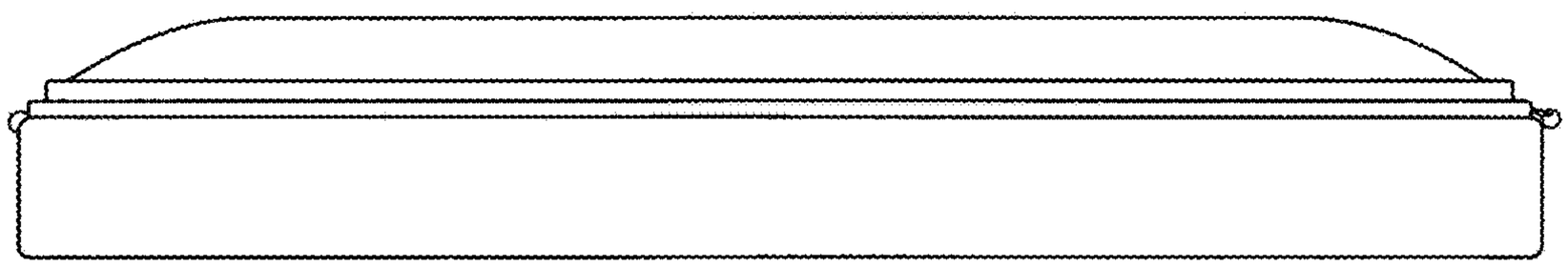

Fig. 10

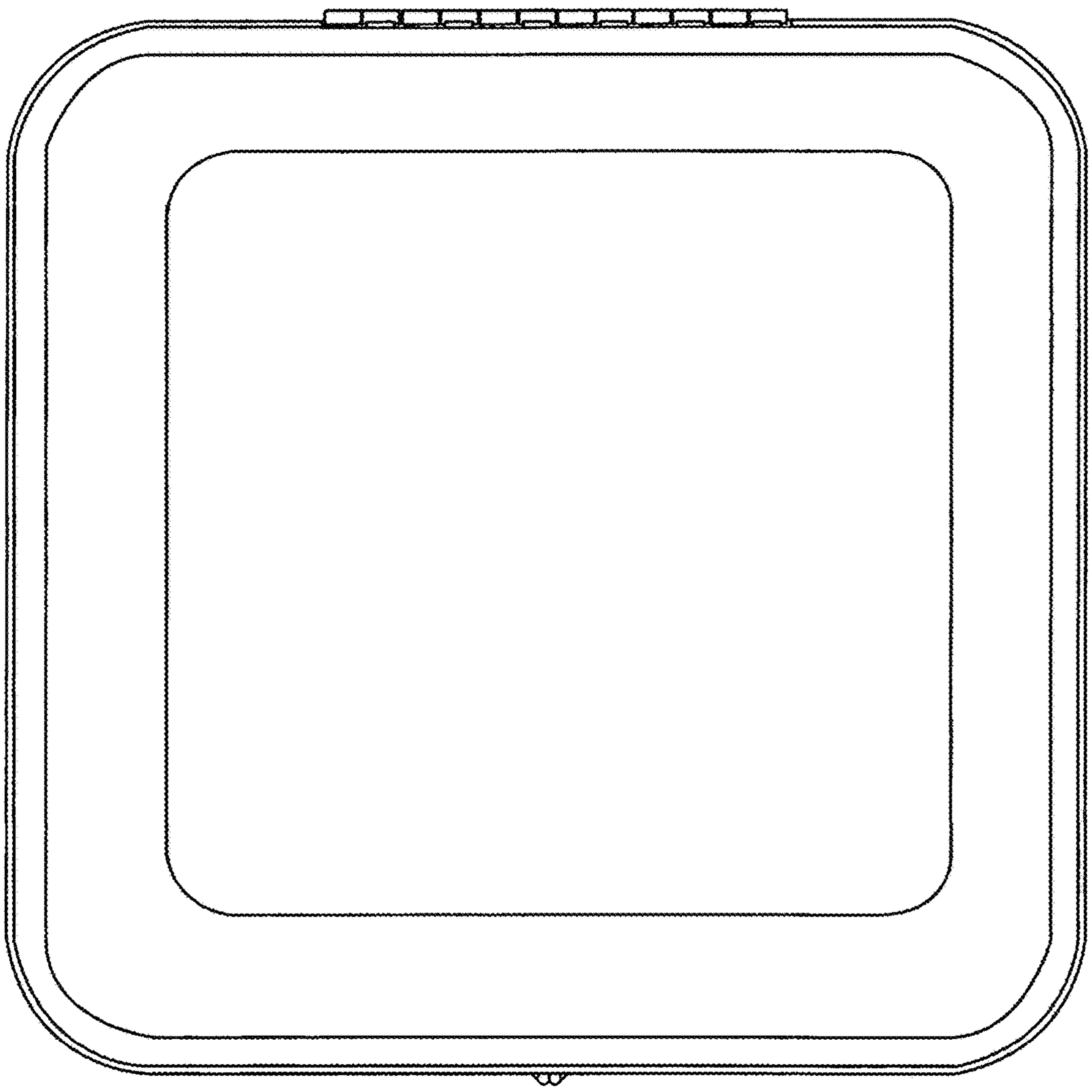
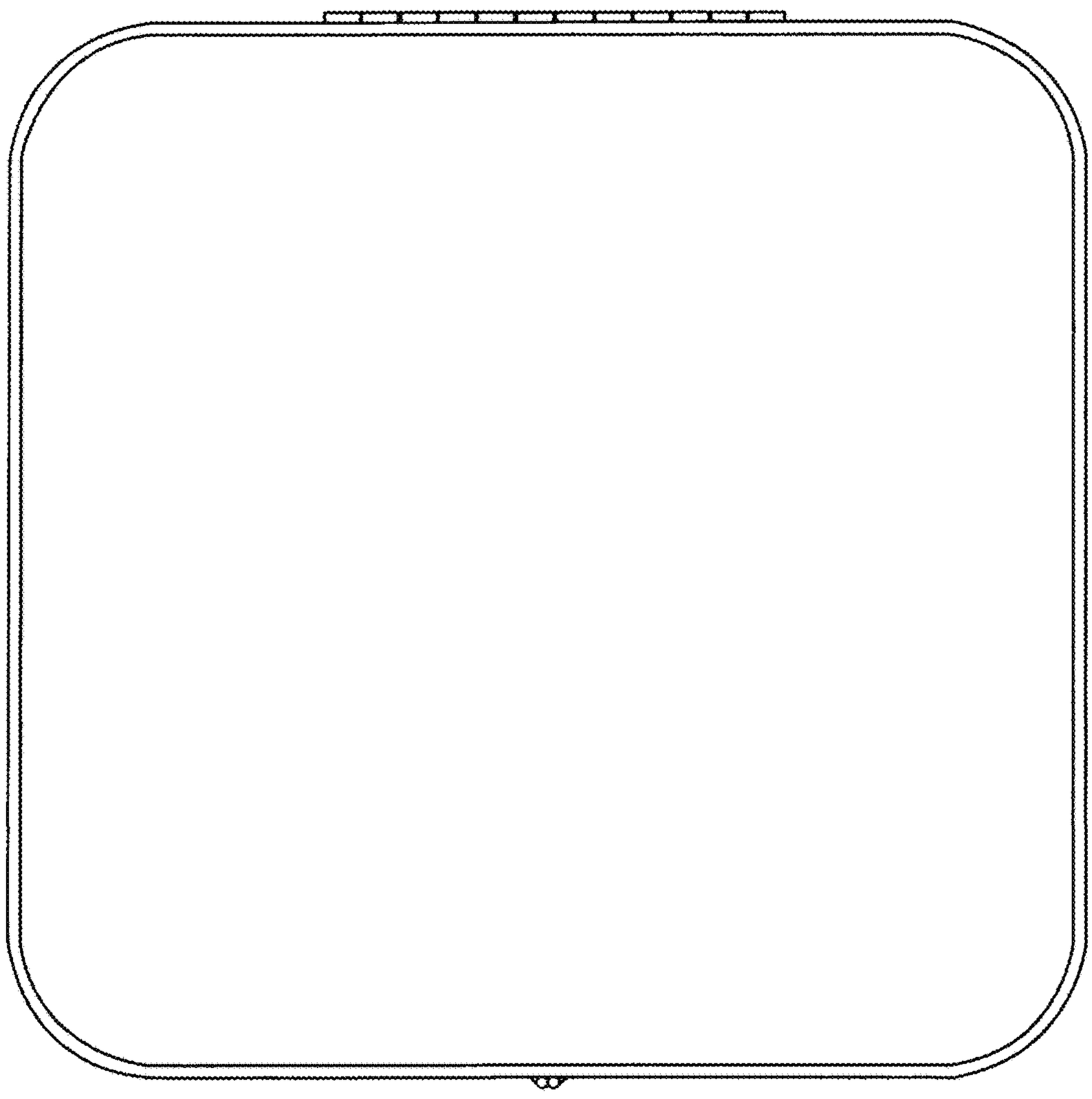
Fig. 11