US00D852380S

(12) United States Design Patent

Springborn

(10) Patent No.: US D852,380 S
(45) Date of Patent: ** Jun. 25, 2019

(54) **HANDRAIL**

(71) Applicant: **Russell H. Springborn**, Howell, MI (US)

(72) Inventor: **Russell H. Springborn**, Howell, MI (US)

(**) Term: **15 Years**

(21) Appl. No.: **29/618,701**

(22) Filed: **Sep. 22, 2017**

(51) **LOC (11) Cl.** **25-02**

(52) **U.S. Cl.**
USPC **D25/38.1**

(58) **Field of Classification Search**
USPC D25/38.1, 41.1, 42, 43, 44, 119–126, D25/131, 132, 164, 199; D34/28, 29
CPC E04F 11/18; E04F 11/181; E04F 11/1802; E04F 11/1808; E04F 11/1834; E04F 11/1836; E04F 11/1842; E04F 11/1865; E04H 2017/1447; E04H 2017/1478; E04H 2017/1482; E04H 17/20; E04H 17/1421; E04H 17/1443; B66C 7/02; E01F 15/0453; B63B 17/04
See application file for complete search history.

(56) **References Cited**

U.S. PATENT DOCUMENTS

D200,702	S	3/1965	Huret	
3,491,984	A *	1/1970	Nyberg	E04F 11/181 256/21
D330,431	S	10/1992	Wang	
D560,823	S *	1/2008	Holland	D25/122
D609,820	S	2/2010	Clarke et al.	
D734,495	S	7/2015	Walde	
D755,988	S *	5/2016	Walker	D25/119
D782,697	S	3/2017	Bizzarri et al.	
9,783,990	B2 *	10/2017	Walker	E04F 11/1808
D805,214	S *	12/2017	Bizzarri	D25/38.1
D805,653	S	12/2017	Bizzarri et al.	
D806,265	S	12/2017	Bizzarri et al.	
2008/0265232	A1	10/2008	Terrels et al.	
2015/0252588	A1	9/2015	Springborn	
2016/0230413	A1	8/2016	Springborn	
2016/0362908	A1 *	12/2016	Springborn	E04F 11/1817
2017/0234015	A1	8/2017	Bizzarri et al.	

OTHER PUBLICATIONS

http://www.ultramaxrailing.com/assets/files/2018/brochures/UltraMaxLevelRailing.pdf Dec. 18, 2017 (Year: 2017).*
http://www.ultramaxrailing.com/assets/files/2018/brochures/UltraMaxReadyToBuildRailing.pdf Dec. 20, 2017 (Year: 2017).*
http://www.ultrarailing.com/Available Mar. 1, 2018 (Year: 2018).

* cited by examiner

Primary Examiner — Leanne Was-Englehart
(74) *Attorney, Agent, or Firm* — Dykema Gossett PLLC

(57) **CLAIM**

The ornamental design for a handrail, as shown and described.

DESCRIPTION

This application is related to U.S. design application Ser. No. 29/618,698 filed 22 Sep. 2017 and U.S. design application Ser. No. 29/618,702, filed 22 Sep. 2017.
FIG. **1** is a top, perspective view of a handrail;
FIG. **2** is a bottom, perspective view of the handrail;
FIG. **3** is a right, end view of the handrail;
FIG. **4** is a left, end view of the handrail;
FIG. **5** is a top, plan view of the handrail;
FIG. **6** is a bottom, plan view of the handrail;
FIG. **7** is a right, side view of the handrail; and,
FIG. **8** is a left, side view of the handrail.

1 Claim, 3 Drawing Sheets

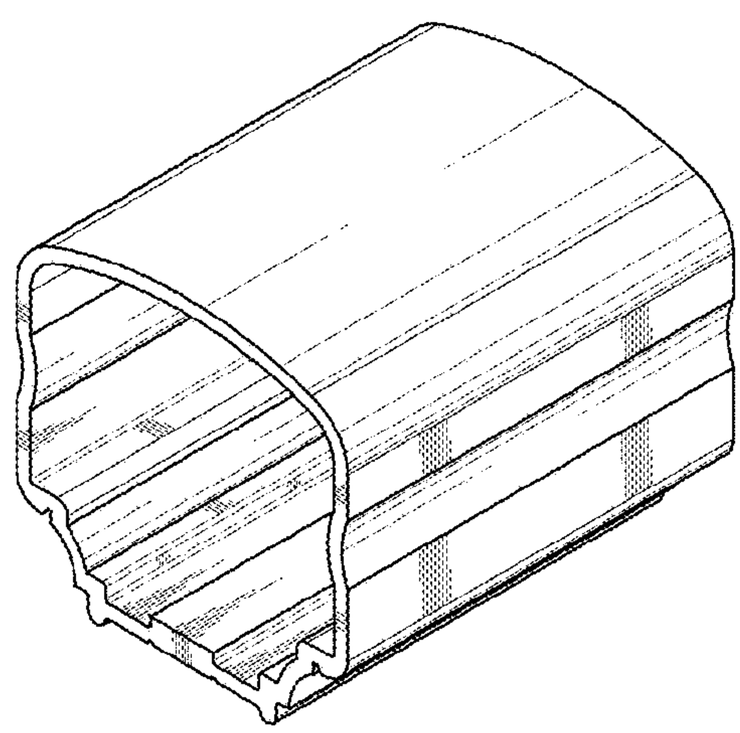

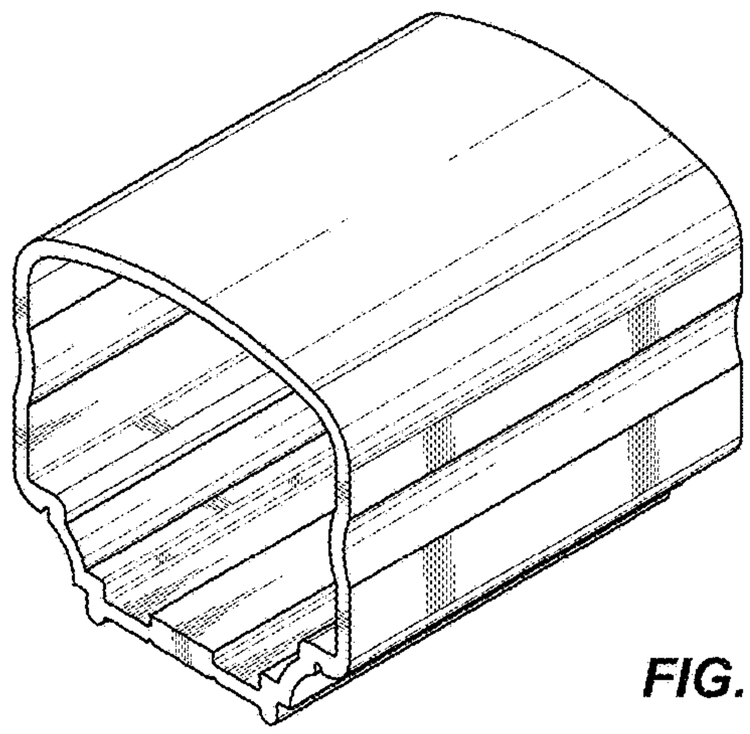

FIG. 1

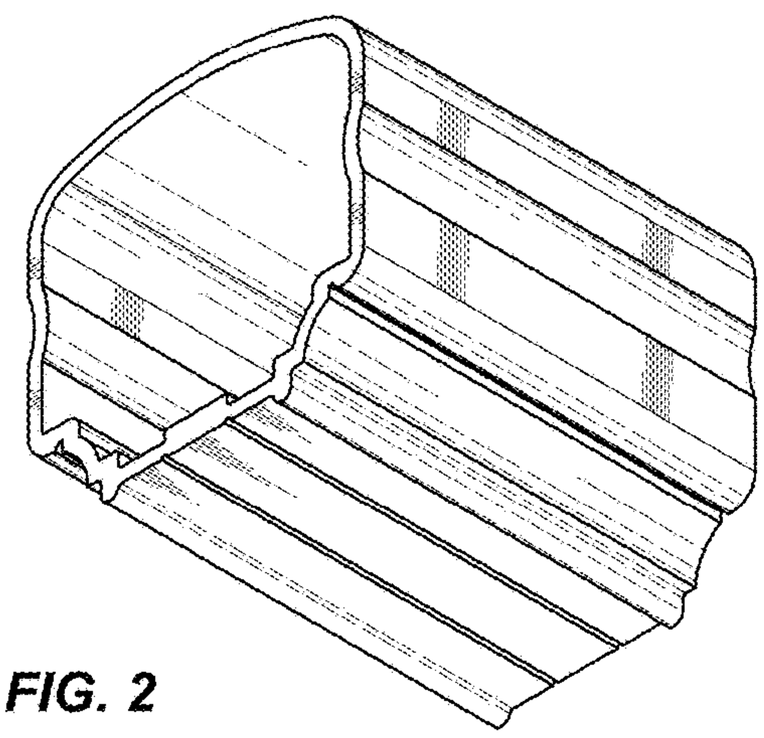

FIG. 2

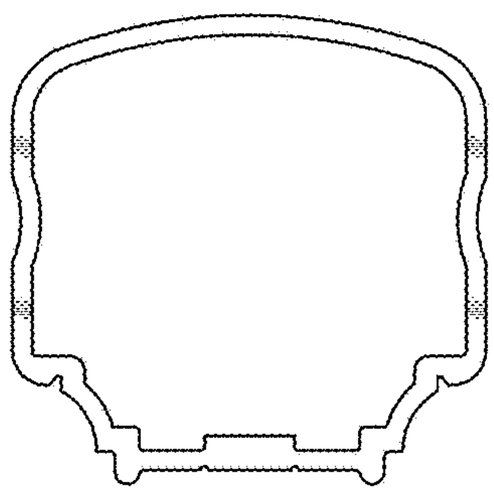

FIG. 3

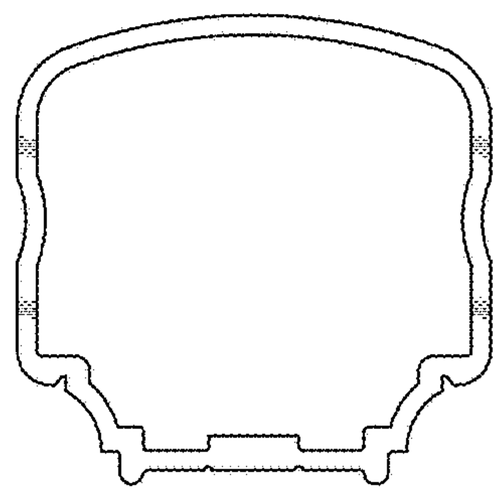

FIG. 4

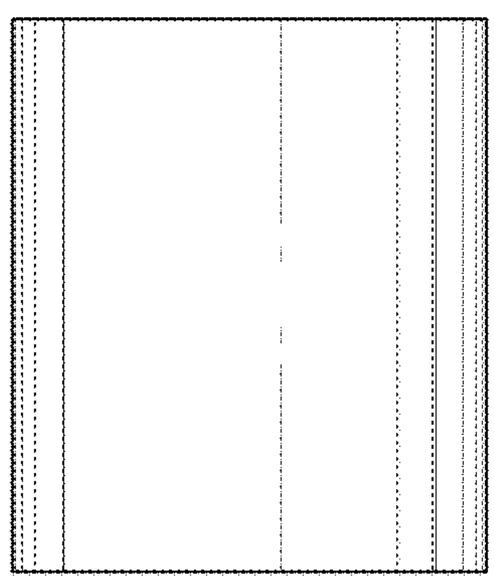

FIG. 5

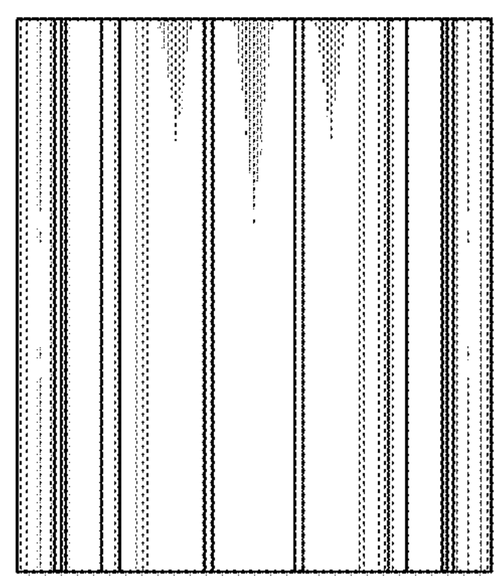

FIG. 6

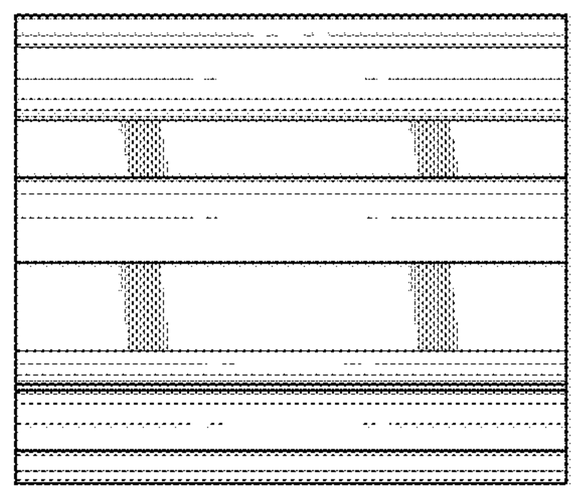

FIG. 7

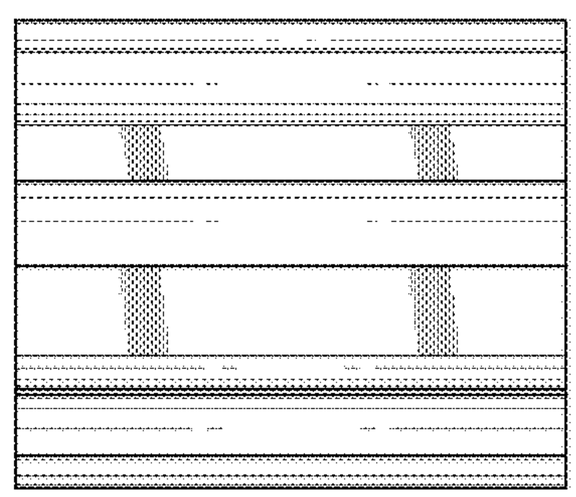

FIG. 8