US00D851253S

(12) United States Design Patent

Goolkasian

(10) Patent No.: US D851,253 S
(45) Date of Patent: ** Jun. 11, 2019

(54) **MOBILE CARDIAC SENSOR**

(71) Applicant: **Eko Devices, Inc.**, Berkeley, CA (US)

(72) Inventor: **Philip Goolkasian**, Berkeley, CA (US)

(**) Term: **15 Years**

(21) Appl. No.: **29/633,700**

(22) Filed: **Jan. 15, 2018**

Related U.S. Application Data

(62) Division of application No. 29/566,812, filed on Jun. 2, 2016, now Pat. No. Des. 810,944.

(51) **LOC (11) Cl.** **24-02**

(52) **U.S. Cl.**
USPC **D24/167**

(58) **Field of Classification Search**
USPC ..... D24/44, 121, 164–167, 185–186, 232; D10/46, 70, 75, 98, 122–126; D14/138 C, 138 R, 203.3, 215, 216, 228, D14/380, 389, 398, 496, 507, 509; 600/301, 481–483, 485, 493–495, 500, 600/503, 509; 128/900
CPC A61N 1/02; A61N 1/39; A61N 1/3925; A61N 1/3968; A61N 2005/1074; A61B 5/00; A61B 5/0006; A61B 5/021; A61B 5/024; A61B 5/02438; A61B 5/0255
See application file for complete search history.

(56) **References Cited**

U.S. PATENT DOCUMENTS

D376,366	S	*	12/1996	Patton	D14/218
D791,952	S	*	7/2017	Florescu	D24/169
D794,805	S	*	8/2017	Kranz	D24/186
D796,350	S	*	9/2017	Bone	D10/46
D800,313	S	*	10/2017	Chang	D24/167
D808,285	S	*	1/2018	Bone	D10/46
D808,930	S	*	1/2018	Lee	D14/218
D810,593	S	*	2/2018	Liu	D10/70
D810,944	S	*	2/2018	Goolkasian	D24/167
D817,930	S	*	5/2018	Kim	D14/218
D836,472	S	*	12/2018	Zhiyuan	D10/70
2018/0256061	A1	*	9/2018	Landgraf	A61B 5/04085

* cited by examiner

Primary Examiner — Wan Laymon
Assistant Examiner — Clint A Samuel
(74) *Attorney, Agent, or Firm* — Brad Bertoglio

(57) **CLAIM**

The ornamental design for a mobile cardiac sensor, as shown and described.

DESCRIPTION

FIG. **1** is a front perspective view of a mobile cardiac sensor showing the new design; and,
FIG. **2** is a front view thereof.
Portions of the mobile cardiac sensor shown in broken lines form no part of the claimed design.

1 Claim, 2 Drawing Sheets

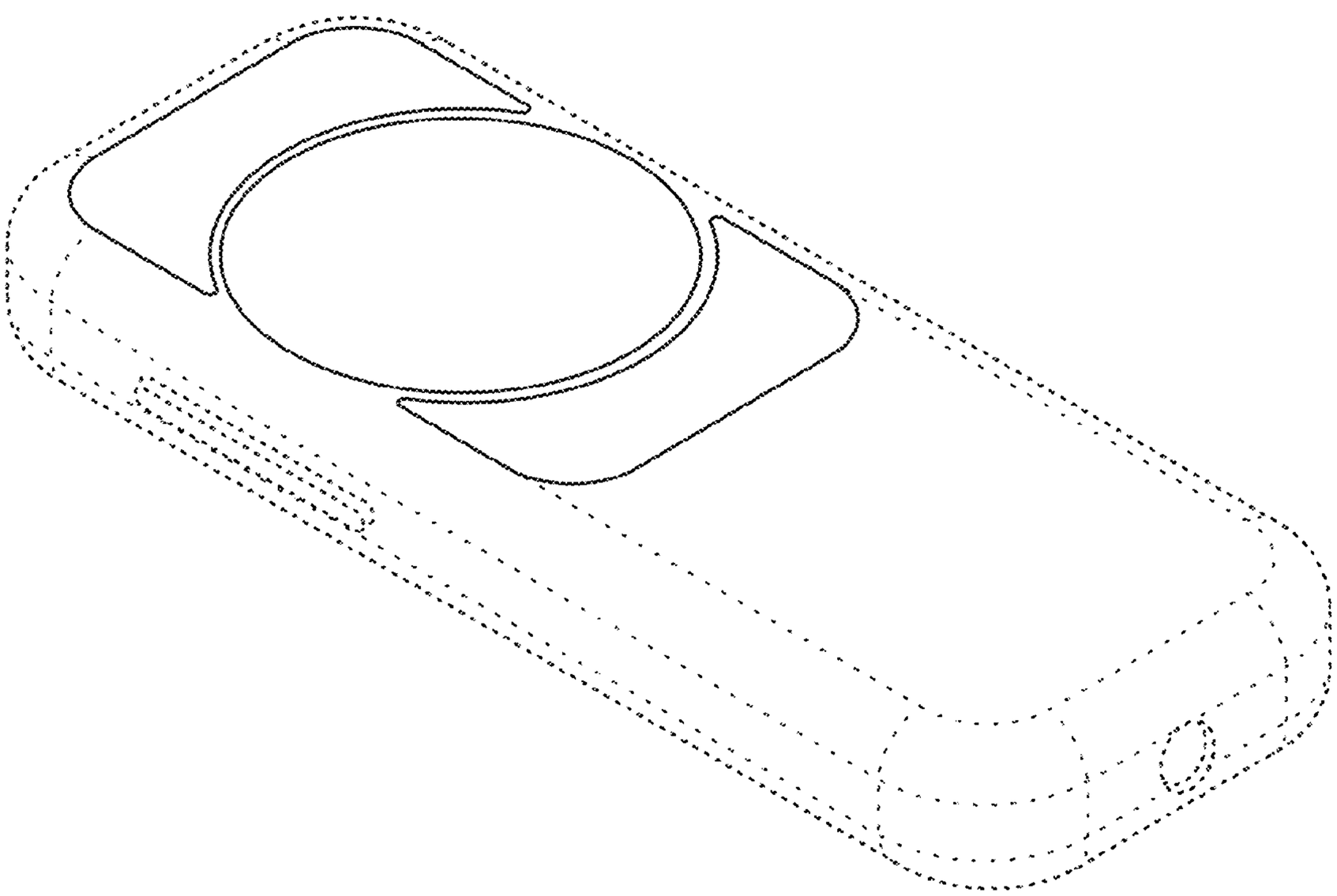

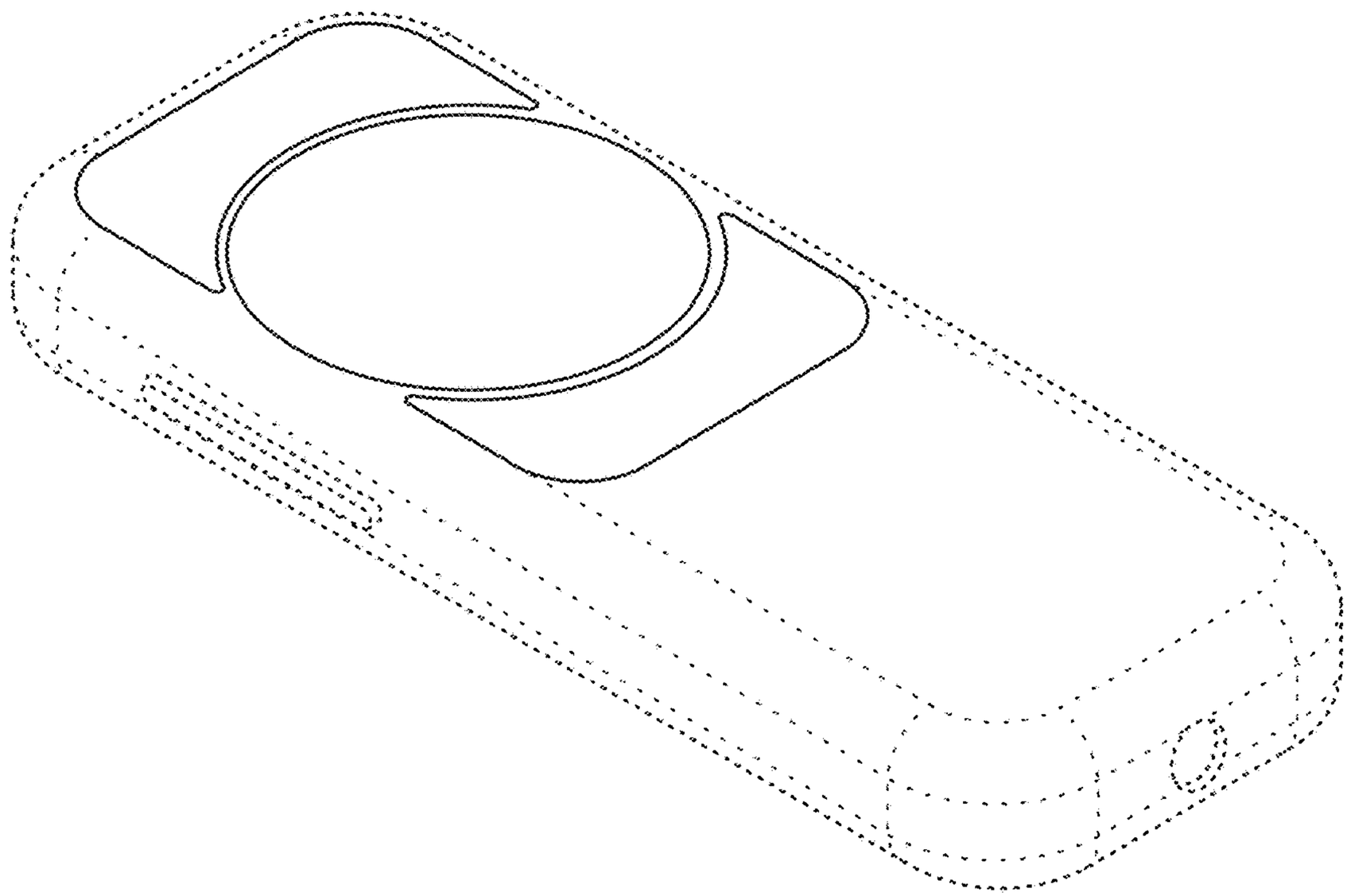

FIG. 1

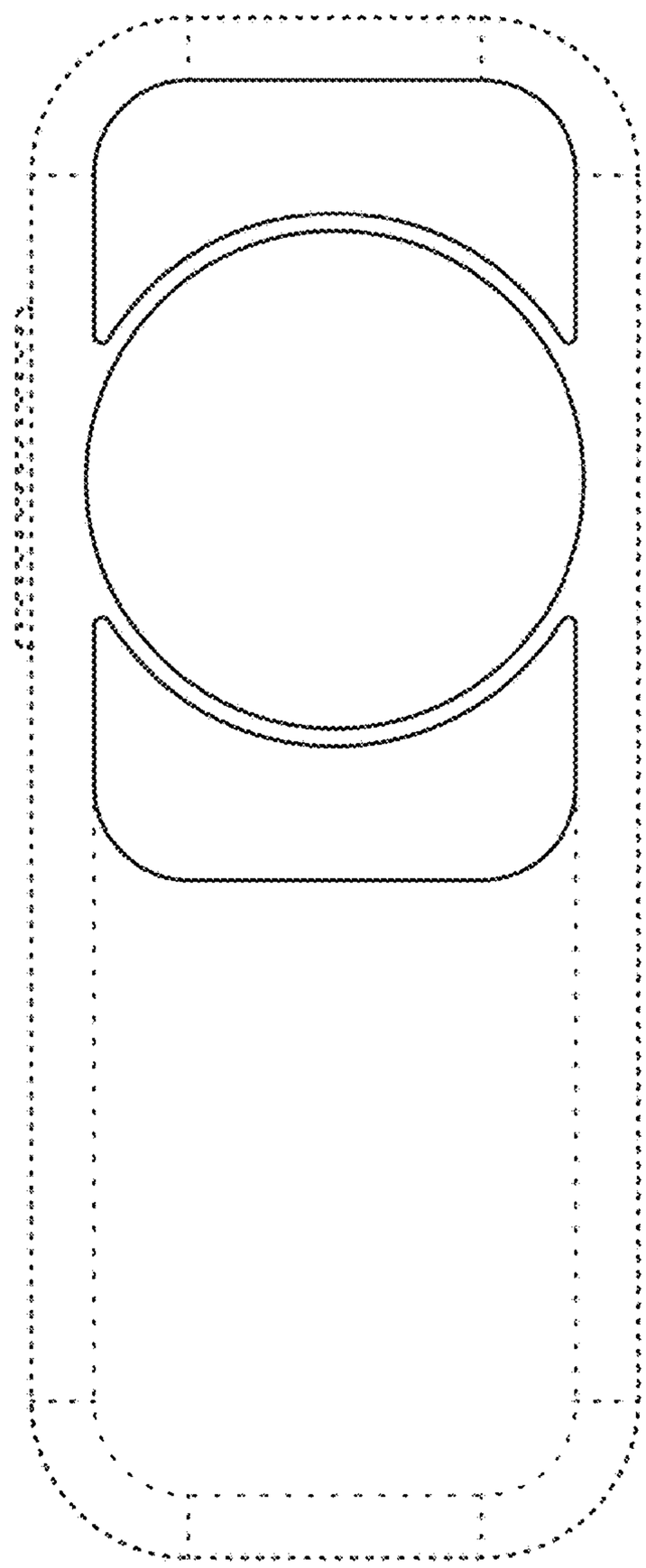

FIG. 2