US00D850601S

(12) United States Design Patent
Puffer

(10) **Patent No.: US D850,601 S**
(45) **Date of Patent: ** Jun. 4, 2019**

(54) **GRILL ELEMENT**

(71) Applicant: **Broan-NuTone LLC**, Hartford, WI (US)

(72) Inventor: **Benjamin Thorpe Puffer**, Hartford, WI (US)

(73) Assignee: **Broan-NuTone LLC**, Hartford, WI (US)

(**) Term: **15 Years**

(21) Appl. No.: **29/536,435**

(22) Filed: **Aug. 17, 2015**

Related U.S. Application Data

(63) Continuation of application No. 29/489,619, filed on May 1, 2014, now Pat. No. Des. 736,903.

(51) **LOC (11) Cl.** **23-04**

(52) **U.S. Cl.**
USPC **D23/372**

(58) **Field of Classification Search**
USPC D23/370–372, 355, 261, 267, 381, 388, D23/397, 400, 402, 411, 412; D7/407; D5/1–3, 54, 60, 58, 47, 53; D14/221
CPC F24C 15/20; F24C 15/2085; B23P 19/00
See application file for complete search history.

(56) **References Cited**

U.S. PATENT DOCUMENTS

D25,525	S	*	5/1896	Schratwieser	D5/1
1,030,028	A		6/1912	Stampaher et al.	
D56,410	S	*	10/1920	Bakstad	D23/385
D56,411	S	*	10/1920	Bakstad	D23/385
1,395,833	A		11/1921	Kling et al.	
1,444,376	A	*	2/1923	Guyse	E04F 13/04 52/675
1,532,635	A		4/1925	Osbun	
1,713,101	A		5/1929	Starrett	
1,886,841	A		11/1932	Searles	
1,895,642	A		1/1933	Livingston	
1,941,450	A		1/1934	Sylvan	
2,019,867	A		11/1935	Nelson	
2,021,086	A		11/1935	Oskamp	
D107,399	S		12/1937	Broadwin	

(Continued)

FOREIGN PATENT DOCUMENTS

BE	648597	9/1994
CA	108550	1/2006

(Continued)

OTHER PUBLICATIONS

"The Newest in Ventilation: Cattura Downdraft", posted on May 6, 2016, blog published by Mountain High Appliance, pp. 1-3, https://www.mountainhighappliance.com/en/blog/527-The-Newest-In-Ventilation-Cattura-Downdraft (Year: 2016).*

(Continued)

Primary Examiner — Janice Hallmark
(74) *Attorney, Agent, or Firm* — Barnes & Thornburg LLP

(57) **CLAIM**

The ornamental design for a grill element, as shown and described.

DESCRIPTION

FIG. **1** is a front perspective view of a grill element.
FIG. **2** is a front view thereof; and,
FIG. **3** is a detail view taken from the portion of the grill element that is shown encircled in FIG. **2**.
The broken lines in FIG. **2** and FIG. **3** encircling a portion of the claimed grill element define the area of the detail view shown in FIG. **3** and form no part of the claimed design. All other broken lines in FIGS. **1** and **2** depict environmental subject matter only and form no part of the claimed design.

1 Claim, 2 Drawing Sheets

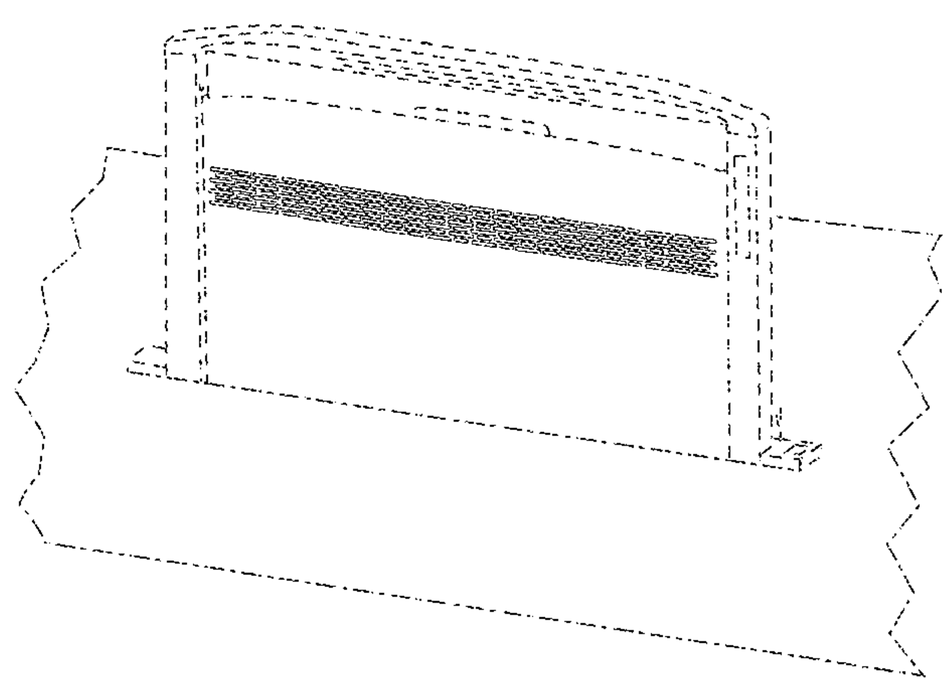

(56) **References Cited**

U.S. PATENT DOCUMENTS

2,108,283 A 2/1938 Drew et al.
D109,887 S 5/1938 Fordyce
2,182,690 A 12/1939 Cole
D118,359 S 1/1940 Arenberg
D120,266 S 4/1940 Kurth et al.
D120,772 S 5/1940 Arenberg
D120,773 S 5/1940 Arenberg
2,220,127 A 11/1940 Slayter
2,222,081 A 11/1940 Leigh
D126,128 S 3/1941 Hallman
2,240,617 A 5/1941 Harrigan
2,278,581 A 4/1942 Dexter
2,281,822 A * 5/1942 Bills E04C 2/427 52/180
D132,865 S 6/1942 Drollinger
2,325,657 A 8/1943 Burkness
D141,372 S * 5/1945 Huffschmidt ..... 126/152 R
D153,313 S 4/1949 Phillips
2,472,748 A 6/1949 Labus
2,483,377 A 9/1949 Young
D157,014 S 1/1950 Walker
2,576,860 A 11/1951 Shapiro
D165,982 S 2/1952 Kennedy
D166,324 S 4/1952 Kurth
D171,505 S 2/1954 Kruger
2,668,491 A 2/1954 Gerlitz
2,673,514 A 3/1954 Hanks
D173,120 S 9/1954 Levenhagen
2,689,906 A 9/1954 Corbett
2,697,163 A 12/1954 Spear
2,710,573 A 6/1955 Marker
2,780,981 A 2/1957 Miller
2,790,375 A 4/1957 Broberg
2,799,213 A 7/1957 Hansen
2,800,069 A 7/1957 Smith
D180,727 S 8/1957 Bourner
2,811,094 A 10/1957 Auer
2,824,429 A 2/1958 Zucker
2,831,550 A 4/1958 Bub
D183,117 S 7/1958 Coleman et al.
D184,248 S * 1/1959 Amberson D5/53
2,875,678 A 3/1959 Shepherd
2,911,900 A 11/1959 Emil
2,939,377 A 6/1960 Stach
2,963,956 A 12/1960 Hill
2,987,258 A 6/1961 North
2,996,972 A 8/1961 Ake
3,001,056 A 9/1961 Spear
3,002,676 A 10/1961 Papsdorf
D192,312 S 2/1962 Hart
3,028,475 A 4/1962 Nash
3,045,579 A 7/1962 Jenn et al.
D193,868 S 10/1962 Bloomfield et al.
3,064,548 A 11/1962 Field
3,068,341 A 12/1962 Ortiz et al.
3,075,335 A 1/1963 Bandlow et al.
3,097,287 A 7/1963 Knoll et al.
3,101,662 A 8/1963 Alldritt
D196,618 S 10/1963 Hammes
D199,045 S 9/1964 Everts
D200,048 S * 1/1965 Van Dyck D25/142
3,211,080 A 10/1965 Rader
3,212,425 A 10/1965 Hazen et al.
3,215,828 A 11/1965 Bonvallet et al.
D204,223 S * 3/1966 Emerick D25/155
D204,582 S * 4/1966 Emerick D5/1
3,249,037 A 5/1966 Stalker
3,250,063 A 5/1966 Andrews
3,276,597 A 10/1966 Mesek et al.
3,326,112 A 6/1967 Sadlow et al.
3,332,334 A 7/1967 Melzer
3,347,025 A 10/1967 Wiley
3,391,689 A 7/1968 Roger
3,438,180 A 4/1969 Klouda
3,460,322 A 8/1969 Rivers et al.
D215,584 S * 10/1969 Bogan, Jr. D25/155
3,572,234 A 3/1971 Schoenthaler
3,577,710 A 5/1971 Feldman
3,606,593 A 9/1971 Steiner
3,630,007 A 12/1971 Neumann
3,636,306 A 1/1972 Bumpus
3,665,838 A 5/1972 Shepherd
D224,703 S * 9/1972 Kiner D25/142
3,692,977 A 9/1972 Duhamel et al.
3,698,833 A 10/1972 Cann et al.
3,732,030 A 5/1973 Mullings
3,743,439 A 7/1973 Cann
D229,181 S 11/1973 Bledsoe
3,777,650 A 12/1973 Wenig
3,785,271 A 1/1974 Joy
3,788,207 A 1/1974 Doherty, II
3,861,894 A 1/1975 Marsh
3,875,678 A 4/1975 Vits
3,926,537 A 12/1975 Piper
3,952,638 A 4/1976 Felter et al.
D244,764 S 6/1977 Grubauer
D244,854 S 6/1977 Salamone
D246,388 S * 11/1977 Shivvers D25/142
4,073,597 A 2/1978 Barnhart et al.
4,115,082 A 9/1978 Newell et al.
4,141,703 A 2/1979 Mulchi
4,203,332 A 5/1980 Corsetti
D256,047 S 7/1980 Wormington
D257,060 S 9/1980 Mann
D258,083 S 1/1981 Gammell
4,252,547 A 2/1981 Johnson
D261,803 S 11/1981 Bohanon, Jr.
D262,457 S 12/1981 Swales
4,319,898 A 3/1982 Maierhofer
4,335,647 A 6/1982 Timmons
4,336,749 A 6/1982 Barnhart et al.
D266,610 S * 10/1982 Bartscher D25/155
D267,828 S 2/1983 Cohen
D268,952 S 5/1983 Anderson
4,382,440 A 5/1983 Kapp et al.
4,385,550 A 5/1983 Steiner et al.
4,385,911 A 5/1983 Popeil et al.
4,406,216 A 9/1983 Hott et al.
D271,984 S 12/1983 Nelson et al.
D275,988 S 10/1984 Walker
D276,282 S 11/1984 Burg
D277,298 S 1/1985 Nelson
D277,299 S 1/1985 Nelson
4,510,851 A 4/1985 Samosky et al.
D282,275 S 1/1986 Price
D282,972 S 3/1986 Castor et al.
4,594,940 A 6/1986 Wolbrink et al.
4,610,705 A 9/1986 Samosky et al.
4,612,230 A * 9/1986 Liland A61B 17/085 428/167
D286,446 S 10/1986 Caroli et al.
4,628,802 A 12/1986 Steiner et al.
D287,888 S 1/1987 Caroli et al.
D288,007 S 1/1987 Jonas et al.
D288,396 S 2/1987 Ritman
4,681,024 A 7/1987 Ivey
4,722,266 A 2/1988 Deckert
D295,675 S 5/1988 Demarest
4,754,697 A 7/1988 Asselbergs
4,776,798 A 10/1988 Crawford
D300,777 S 4/1989 Bales et al.
D300,847 S 4/1989 Lin
4,862,334 A 8/1989 Ivey et al.
D303,436 S 9/1989 Clyde-Mason
4,867,640 A 9/1989 Penlesky et al.
4,934,337 A * 6/1990 Falk ..... F24C 15/2042 126/299 R
4,991,496 A 2/1991 Kuno et al.
D315,790 S 3/1991 Koessler
D322,667 S 12/1991 Fukuda et al.
D323,209 S 1/1992 Fukumoto et al.
D323,554 S 1/1992 Hoyt
D325,434 S 4/1992 Dosmann
D325,651 S 4/1992 Sonneman

(56) **References Cited**

U.S. PATENT DOCUMENTS

D327,538 S * 6/1992 Falk D23/365
D328,650 S 8/1992 Jones
D330,585 S 10/1992 Saito et al.
D331,458 S 12/1992 Saito et al.
D331,638 S 12/1992 Vamberszky et al.
D334,053 S 3/1993 Cook
5,197,920 A 3/1993 Ganse
D334,977 S 4/1993 Avari
D335,533 S 5/1993 Chen
D336,895 S 6/1993 Rogov
D338,954 S 8/1993 Brock
D340,109 S 10/1993 Julien
D341,442 S 11/1993 Shapiro
5,319,942 A 6/1994 Paustian
D349,778 S 8/1994 Johnson et al.
D350,191 S 8/1994 Tsuji
5,333,830 A 8/1994 Millen
D350,409 S 9/1994 Johnson et al.
D352,564 S 11/1994 Marischen
D357,732 S 4/1995 Spechts
D361,375 S 8/1995 Gallagher et al.
D362,059 S 9/1995 Wojcik
D366,521 S 1/1996 Wijaranakula
D366,522 S 1/1996 Lagace et al.
D367,924 S 3/1996 Patel
D372,767 S 8/1996 Borges
D372,775 S 8/1996 Schuler
D374,927 S 10/1996 Chabot
D375,350 S 11/1996 Patel et al.
D376,214 S 12/1996 Pinchuk
D376,639 S 12/1996 Moore
D376,842 S 12/1996 Franklin et al.
D377,535 S 1/1997 Shulman
5,601,485 A 2/1997 Gigola
D378,698 S 4/1997 Ukai et al.
5,632,334 A 5/1997 Grinbergs et al.
D382,549 S 8/1997 Yoshimoto
D386,186 S 11/1997 Schnetzer et al.
D386,209 S 11/1997 Firestone et al.
D387,859 S 12/1997 Ukai et al.
D388,353 S 12/1997 Desborough et al.
D393,708 S 4/1998 Assadi
D395,494 S 6/1998 Becker
D396,275 S 7/1998 Pearson
D398,417 S 9/1998 Fritzsche
5,820,247 A 10/1998 Schuler
D401,682 S 11/1998 Galeazzi et al.
D403,442 S 12/1998 Joss
D403,787 S 1/1999 Van Belle
D404,508 S 1/1999 Marischen
D405,207 S 2/1999 Mora
D407,473 S 3/1999 Winbock
D407,521 S 3/1999 Crosby
5,879,232 A 3/1999 Luter, II et al.
D409,449 S 5/1999 Cornelissen
5,918,972 A 7/1999 Van Belle
D412,566 S 8/1999 Taras et al.
D414,253 S 9/1999 Kobayashi et al.
5,971,847 A 10/1999 Webb
D416,158 S * 11/1999 Denney D6/582
D416,315 S 11/1999 Nanjo
D416,349 S 11/1999 Pahl
D417,307 S 11/1999 Pahl
D418,909 S 1/2000 Mockett
D420,121 S 2/2000 Felix-Flender
6,027,406 A 2/2000 Yazici
D424,672 S 5/2000 Nanjo
D425,974 S 5/2000 Esty et al.
D426,292 S 6/2000 Nanjo
D426,657 S 6/2000 Joss
D427,009 S 6/2000 Iyengar et al.
D427,303 S 6/2000 Brown
D428,645 S 7/2000 Rossman et al.
D431,075 S 9/2000 Barraclough
D433,116 S 10/2000 Han et al.
D434,126 S 11/2000 Caronna et al.
D435,124 S 12/2000 Yuen
D435,705 S 12/2000 Powers et al.
D436,926 S 1/2001 Lew
D437,077 S 1/2001 Minissi et al.
D437,405 S 2/2001 Schrank
D438,328 S 2/2001 Pan
D438,948 S 3/2001 Schrank
6,227,962 B1 5/2001 Orendorff
D443,924 S 6/2001 Renella
6,261,175 B1 7/2001 Larson et al.
D446,850 S 8/2001 Arlotta et al.
D448,462 S 9/2001 Nanjo
D449,680 S 10/2001 Arlotta et al.
D451,187 S 11/2001 Webb
D452,904 S 1/2002 Peng
D452,905 S 1/2002 Peng
D452,906 S 1/2002 Peng
D453,375 S 2/2002 Peng
D453,564 S 2/2002 Schrank
D454,391 S 3/2002 Schrank
D457,232 S 5/2002 Miura
D457,616 S 5/2002 Yamanaka et al.
D461,235 S 8/2002 Arlotta et al.
D461,995 S 8/2002 Massaloux et al.
D464,418 S 10/2002 Goncalves et al.
D464,718 S 10/2002 Wilson
6,464,579 B1 10/2002 Salazar
D465,565 S 11/2002 Twito
D467,768 S * 12/2002 Becker D7/407
6,488,579 B2 12/2002 Larson et al.
D469,172 S 1/2003 Warren et al.
6,503,060 B1 1/2003 Kamada
D470,233 S 2/2003 Sarkinen et al.
D470,482 S 2/2003 Ikeda
6,537,146 B1 3/2003 Haynes
D474,299 S 5/2003 Lecluze
D475,131 S 5/2003 Pilger
D476,073 S 6/2003 Bourgeois
D480,712 S 10/2003 Noro
D480,791 S 10/2003 Phillips
D481,822 S 11/2003 Wang
D482,350 S 11/2003 Noro et al.
D482,778 S 11/2003 Shapiro
6,651,454 B1 11/2003 Spiegel
6,653,566 B2 11/2003 Petak et al.
6,698,419 B2 * 3/2004 Lee ..... F24C 15/2042 126/299 D
6,723,428 B1 4/2004 Foss et al.
D490,147 S 5/2004 Miura
D490,509 S 5/2004 Negrao et al.
6,750,760 B2 6/2004 Albritton et al.
D493,447 S 7/2004 Noro et al.
D493,516 S 7/2004 Harbutt et al.
D493,907 S 8/2004 Benensohn
D496,487 S 9/2004 Rhee
D496,992 S 10/2004 Lafond
D499,505 S 12/2004 Benensohn
D503,689 S 4/2005 Saucier
6,889,948 B2 5/2005 Melancon et al.
D510,151 S 9/2005 Rashidi
D510,432 S 10/2005 Bargiel
D510,996 S 10/2005 Vladika
D511,379 S 11/2005 Penlesky et al.
D512,503 S 12/2005 Roland
D513,072 S 12/2005 Berg
6,979,169 B2 12/2005 Penlesky et al.
D514,221 S 1/2006 Vladika
D514,732 S 2/2006 Benensohn
D521,145 S 5/2006 Craw et al.
D530,808 S 10/2006 Sinur et al.
D531,301 S 10/2006 Sinur et al.
D532,095 S 11/2006 Calkins
D532,247 S 11/2006 Copeland
D533,956 S 12/2006 Vladika
D534,301 S 12/2006 Roland
D535,431 S 1/2007 Roland
D535,433 S 1/2007 Craw et al.
D535,434 S 1/2007 Fischer et al.

(56) **References Cited**

U.S. PATENT DOCUMENTS

D536,778 S 2/2007 O'Hagin
D537,511 S 2/2007 Nagahori
D538,422 S 3/2007 Hooijmaaijers
D539,404 S 3/2007 Nagahori
D539,887 S 4/2007 Kato et al.
D539,888 S 4/2007 Tsuji
D541,405 S 4/2007 Snyder
7,203,416 B2 4/2007 Craw et al.
D541,689 S 5/2007 Meyers et al.
D541,927 S 5/2007 Yamanaka et al.
D543,270 S 5/2007 Miura et al.
D544,618 S 6/2007 Coushaine
D545,487 S 6/2007 Bynum
D547,853 S 7/2007 Pilon et al.
D550,043 S 7/2007 Brattoli
D550,344 S 9/2007 Weggelaar
D550,660 S 9/2007 Noro et al.
D551,750 S 9/2007 Wefler
D553,235 S 10/2007 Herbst et al.
D553,727 S 10/2007 Kato et al.
D553,905 S 10/2007 Orr, Jr.
D554,820 S * 11/2007 Dretzka D32/57
D555,777 S 11/2007 Aveldson
D561,321 S * 2/2008 Hong D23/370
D561,322 S * 2/2008 Hong D23/370
D561,887 S 2/2008 Friedman et al.
7,328,478 B2 2/2008 Jenkins
D563,539 S 3/2008 Sinur et al.
D565,716 S 4/2008 Jacak
D565,717 S 4/2008 Jacak et al.
D565,722 S 4/2008 Hollingsworth et al.
D566,257 S 4/2008 Deng
D566,262 S 4/2008 Zakula et al.
D566,912 S 4/2008 Reick-Mitrisin et al.
D567,352 S 4/2008 Hollingsworth et al.
D567,353 S 4/2008 Hollingsworth et al.
D567,354 S 4/2008 Jacak et al.
D567,355 S 4/2008 Zakula et al.
D567,434 S 4/2008 Itiravivong
D567,435 S 4/2008 Kim et al.
D567,692 S 4/2008 Meyers et al.
D567,931 S 4/2008 Hollingsworth et al.
D567,932 S 4/2008 Hollingsworth et al.
D567,933 S 4/2008 Hollingsworth et al.
D568,460 S 5/2008 Jacak et al.
D569,492 S 5/2008 Zakula et al.
D570,465 S 6/2008 Miyake et al.
D571,453 S 6/2008 Hsu et al.
D574,478 S 8/2008 Miyake et al.
D575,386 S 8/2008 Jacak et al.
D575,387 S 8/2008 Zakula et al.
D575,389 S 8/2008 Lazzara
D577,431 S 9/2008 Miyake et al.
D577,805 S 9/2008 Adrian et al.
D577,806 S * 9/2008 Grey D23/372
D578,811 S 10/2008 Gervasi
D581,508 S 11/2008 Miyake et al.
D581,516 S 11/2008 Koury et al.
D581,517 S 11/2008 Koury et al.
D582,527 S * 12/2008 Wang D23/261
D584,393 S 1/2009 Miyake et al.
D584,394 S 1/2009 Miyake et al.
D585,129 S 1/2009 Huang
D587,797 S 3/2009 Blanchard
D588,257 S 3/2009 Reedy
D588,688 S 3/2009 Lablaine
D589,605 S 3/2009 Reedy et al.
D590,486 S * 4/2009 Park D23/314
7,537,647 B2 5/2009 Adair et al.
D595,402 S 6/2009 Miyake et al.
D595,830 S 7/2009 Deng
D601,281 S 9/2009 Howard et al.
7,581,717 B1 9/2009 Thurlkill
D602,145 S * 10/2009 Grey D23/372
D602,146 S 10/2009 Olesen
D602,193 S 10/2009 Soderman et al.
D602,578 S * 10/2009 Grey D23/372
7,596,960 B2 10/2009 Bae
D604,834 S 11/2009 Ungar
D606,696 S 12/2009 Chen et al.
D607,600 S 1/2010 Keith
D609,321 S 2/2010 Tomasulo
D609,803 S 2/2010 Ungar
D609,840 S 2/2010 Tang
D617,441 S 6/2010 Koury et al.
D617,889 S 6/2010 Miyake
D618,782 S 6/2010 Zakula et al.
D618,783 S * 6/2010 Kimura D23/388
D619,699 S * 7/2010 Kimura D23/388
D621,491 S 8/2010 Tsuji
D622,033 S 8/2010 Lambetz
D622,372 S * 8/2010 Grey D23/372
D622,373 S * 8/2010 Grey D23/372
7,836,877 B2 11/2010 Gagas et al.
D628,737 S 12/2010 Van Den Akker
D629,561 S 12/2010 Kim et al.
D629,882 S 12/2010 Nguyen
D629,883 S * 12/2010 Kimura D23/388
7,850,513 B1 12/2010 Parker et al.
D631,144 S 1/2011 Tsuji
D631,188 S 1/2011 Lovegrove
D632,380 S 2/2011 Kim et al.
D635,238 S 3/2011 Zakula et al.
D636,482 S 4/2011 LeMay
D636,611 S 4/2011 Duma
D638,925 S 5/2011 Charlebois et al.
D642,667 S 8/2011 Irwin
D646,417 S 8/2011 Wauters
D647,309 S * 10/2011 Kuehn D5/58
D648,135 S 11/2011 Lee
D648,471 S 11/2011 Wauters
D653,323 S 1/2012 Jacak
D654,998 S 2/2012 Zakula et al.
D655,403 S 3/2012 Zakula et al.
D655,804 S 3/2012 Platt
D655,850 S 3/2012 Sabernig
D655,855 S 3/2012 Sabernig
D656,264 S 3/2012 Janssen
D657,036 S 4/2012 Vetu et al.
D657,858 S 4/2012 Platt
D658,603 S 5/2012 Egawa et al.
D658,604 S 5/2012 Egawa et al.
D662,648 S 6/2012 Whiting et al.
D663,880 S 7/2012 Janssen
D663,881 S 7/2012 Janssen
D664,369 S 7/2012 Duma
D665,225 S 8/2012 Zakula et al.
8,256,241 B2 9/2012 Ikeda et al.
8,312,873 B2 11/2012 Gagas et al.
D672,079 S 12/2012 Kong
D678,010 S 3/2013 Sudmalis
D678,497 S 3/2013 Tom
D678,995 S 3/2013 Hoshino et al.
D679,046 S 3/2013 Hoshino et al.
D681,794 S 5/2013 Lin et al.
D682,455 S 5/2013 Apetauer et al.
D685,947 S 7/2013 Pyle
D690,869 S 10/2013 Katz et al.
D694,386 S * 11/2013 Sinur D23/372
D694,387 S 11/2013 Sinur et al.
D694,388 S 11/2013 Sinur et al.
D694,389 S 11/2013 Sinur et al.
D694,390 S 11/2013 Sinur et al.
D694,391 S 11/2013 Sinur et al.
D694,392 S 11/2013 Sinur et al.
D694,863 S * 12/2013 Brodey D23/261
D701,952 S 4/2014 Hoshino et al.
D702,827 S 4/2014 Mase et al.
D704,318 S 5/2014 Martel
D705,409 S 5/2014 Hagiwara
D705,417 S 5/2014 Lin et al.
D706,404 S 6/2014 Tsuji
D706,916 S 6/2014 Penlesky et al.
D709,170 S 7/2014 Tsuji

(56) **References Cited**

U.S. PATENT DOCUMENTS

D710,000	S		7/2014	Moreno	
D711,854	S	*	8/2014	Sulzer	D14/221
D711,929	S	*	8/2014	Werner	D15/31
D713,952	S		9/2014	Jepson	
8,844,608	B2	*	9/2014	Kimura	F24F 1/01 165/10
D714,927	S	*	10/2014	Urano	D23/388
8,864,447	B1		10/2014	Humphrey	
D716,772	S		11/2014	Cavero et al.	
D717,595	S	*	11/2014	Knoll	D7/402
D717,933	S		11/2014	McClelland et al.	
D718,086	S		11/2014	Lewis et al.	
D718,434	S		11/2014	Diamond	
D718,762	S		12/2014	Aarrestad et al.	
D720,442	S		12/2014	Kosuge	
D725,624	S		3/2015	Carney et al.	
D728,245	S	*	5/2015	Haverfield	D5/60
D728,772	S		5/2015	Santeler et al.	
D730,510	S		5/2015	Schanzenbach	
9,022,846	B1		5/2015	Tom	
9,028,212	B1		5/2015	Tom	
D732,156	S		6/2015	Penlesky et al.	
D733,861	S		7/2015	Haaf et al.	
D733,862	S	*	7/2015	Klunker	D23/372
D733,863	S		7/2015	Funnell, II et al.	
D736,903	S	*	8/2015	Puffer	D23/372
9,103,104	B1		8/2015	Tom	
D738,482	S		9/2015	Lin et al.	
D738,538	S		9/2015	Lillejord	
D739,049	S	*	9/2015	Kurihara	D25/138
D739,928	S		9/2015	Raisanen	
D739,977	S		9/2015	Boyer et al.	
9,131,814	B2		9/2015	Nakamura	
D741,377	S	*	10/2015	Werner	D15/31
D741,463	S		10/2015	Hauville et al.	
D741,648	S		10/2015	Wahl	
D742,494	S		11/2015	Kouketsu et al.	
D743,520	S		11/2015	Sinur et al.	
9,182,138	B2		11/2015	Foreman et al.	
9,188,132	B1		11/2015	Tom	
D744,628	S		12/2015	Alexander	
D745,652	S		12/2015	Berkman et al.	
D746,424	S		12/2015	Takahashi et al.	
D746,427	S		12/2015	Mecker	
9,212,668	B2		12/2015	Deng et al.	
D747,141	S		1/2016	Wahl	
D747,576	S		1/2016	Fjellman	
D751,189	S		3/2016	Suzuki et al.	
D751,247	S		3/2016	Reynolds	
D752,201	S		3/2016	Herbst	
D753,869	S		4/2016	Prijic	
D754,319	S		4/2016	Park et al.	
9,303,859	B2		4/2016	Horng et al.	
9,303,888	B2		4/2016	Karst et al.	
D755,942	S		5/2016	Kim	
D759,800	S		6/2016	Adrian et al.	
D771,231	S		11/2016	Chen et al.	
D778,424	S		2/2017	Jonas et al.	
D778,425	S		2/2017	Jonas et al.	
D779,050	S		2/2017	Jonas et al.	
D784,511	S		4/2017	Jonas et al.	
D784,512	S		4/2017	Jonas et al.	
9,777,930	B2	*	10/2017	Langenbach	F24C 15/2042
D804,009	S	*	11/2017	Mok	D23/372
2003/0220069	A1		11/2003	Orendorif	
2005/0095979	A1		5/2005	Moreno	
2005/0111840	A1		5/2005	Craw et al.	
2006/0278215	A1		12/2006	Gagas et al.	
2007/0167128	A1		7/2007	Popowitz	
2008/0029081	A1	*	2/2008	Gagas	F24C 15/2035 126/299 D
2009/0130970	A1		5/2009	Jacak et al.	
2009/0137201	A1	*	5/2009	Huber	F24C 15/2042 454/284
2009/0170421	A1		7/2009	Adrian et al.	
2009/0280737	A1		11/2009	Jacak et al.	
2012/0087132	A1		4/2012	Zakula et al.	
2013/0088855	A1		4/2013	Ye et al.	
2013/0319400	A1	*	12/2013	Langenbach	F24C 15/2042 126/299 D
2014/0041649	A1	*	2/2014	Sinur	F24C 15/2042 126/299 D
2014/0063796	A1		3/2014	Zakula et al.	
2014/0290641	A1	*	10/2014	Worrell	F24C 15/2042 126/299 D
2015/0117034	A1		4/2015	Horng et al.	
2015/0125292	A1		5/2015	Karst et al.	
2015/0140923	A1		5/2015	Penlesky	
2015/0198337	A1	*	7/2015	Punzel	F24C 15/2042 126/299 D
2015/0219118	A1		8/2015	Zakula et al.	
2015/0330641	A1	*	11/2015	Lillesand	F24C 15/2085 126/299 D
2016/0029109	A1		1/2016	Liu et al.	
2016/0069561	A1		3/2016	Jonas et al.	

FOREIGN PATENT DOCUMENTS

CA	108557		1/2006
CA	2636643		12/2012
CA	147804	S	9/2013
CA	163015		5/2016
CA	163016		5/2016
CA	163017		5/2016
CA	163018		5/2016
CN	303580220		2/2016
CN	303580221		2/2016
CN	303580222		2/2016
CN	303580223		2/2016
CN	303580224		2/2016
EP	1248048		10/2002
FR	1234767		10/1960

OTHER PUBLICATIONS

U.S. Appl. No. 29/489,619, filed May 1, 2014, Down Draft Grill, now Design U.S. Pat. No. D736,903.

"Canadian Application Serial No. 163,015, Response filed Mar. 10, 2016 to Office Action dated Nov. 10, 2015", 7 pgs.

"U.S. Appl. No. 29/521,663, Corrected Notice of Allowance dated Mar. 30. 2016", 4 pgs.

"U.S. Appl. No. 29/514,061, Non Final Office Action dated May 19, 2016", 19 pgs.

"U.S. Appl. No. 29/514,063, Non Final Office Action dated May 19, 2016", 22 pgs.

"U.S. Appl. No. 29/514,067, Non Final Office Action dated May 20, 2016", 21 pgs.

"U.S. Appl. No. 29/514,073, Non Final Office Action dated May 20, 2016", 21 pgs.

"U.S. Appl. No. 29/514,070, Non Final Office Action dated May 27, 2016", 26 pgs.

"Chinese Application Serial No. 201630055109.5, Office Action dated Jun. 1, 2016", 1 pg.

"Canadian Application Serial No. 165,307, Response filed Jun. 15, 2016 to Office Action dated Feb. 15, 2016", 9 pgs.

"Canadian Application Serial No. 165,355, Response filed Jun. 15, 2016 to Office Action dated Feb. 15, 2016", 6 pgs.

"Canadian Application Serial No. 165,366, Response filed Jun. 15, 2016 to Office Action dated Feb. 15, 2016", 18 pgs.

"Canadian Application Serial No. 167,117, Office Action dated Jul. 14, 2016", 3 pgs.

"U.S. Appl. No. 29/514,061, Response filed Aug. 17, 2016 to Non Final Office Action dated May 19, 2016", 6 pgs.

"U.S. Appl. No. 29/514,063, Response filed Aug. 17, 2016 to Non Final Office Action dated May 19, 2016", 8 pgs.

"U.S. Appl. No. 29/514,067, Response filed Aug. 22, 2016 to Non Final Office Action dated May 20, 2016", 6 pgs.

"U.S. Appl. No. 29/514,073, Response filed Aug. 22, 2016 to Non Final Office Action dated May 20, 2016", 6 pgs.

(56) **References Cited**

OTHER PUBLICATIONS

"U.S. Appl. No. 29/514,970, Response filed Aug. 29, 2016 to Non Final Office Action dated May 27, 2016", 6 pgs.
"U.S. Appl. No. 29/538,019, Restriction Requirement dated Sep. 1, 2016", 7 pgs.
"Chinese Application Serial No. 201630055109.5, Response filed Sep. 18, 2016 to Office Action dated Jun. 1, 2016", 5 pgs.
"U.S. Appl. No. 29/514,061, Final Office Action dated Sep. 19, 2016", 9 pgs.
"U.S. Appl. No. 29/514,073, Notice of Allowance dated Sep. 19, 2016", 8 pgs.
"U.S. Appl. No. 29/514,067, Notice of Allowance dated Sep. 20, 2016", 9 pgs.
"U.S. Appl. No. 29/514,070, Notice of Allowance dated Sep. 21, 2016", 6 pgs.
"Canadian Application Serial No. 165,355, Response filed Sep. 22, 2016 to Office Action dated Jun. 28, 2016", 2 pgs.
"U.S. Appl. No. 29/514,070, Corrected Notice of Allowance dated Oct. 5, 2016", 2 pgs.
"U.S. Appl. No. 29/514,073, Corrected Notice of Allowance dated Oct. 5, 2016", 2 pgs.
"U.S. Appl. No. 29/538,019, Examiner Interview Summary dated Oct. 11, 2016", 7 pgs.
"U.S. Appl. No. 29/514,063, Response filed Oct. 24, 2016 to Non-Final Office Action dated May 19, 2016", 8 pgs.
"Canadian Application Serial No. 169,274, Office Action dated Oct. 25, 2016", 2 pgs.
"Canadian Application Serial No. 169,275, Office Action dated Oct. 25, 2016", 2 pgs.
"U.S. Appl. No. 29/538,019, Response filed Nov. 1, 2016 to Restriction Requirement dated Sep. 1, 2016", 4 pgs.
"Canadian Application Serial No. 167, 117, Response filed Nov. 3, 2016 to Office Action dated Jul. 14, 2016", 10 pgs.
"U.S. Appl. No. 29/514,061, Response filed Nov. 21, 2016 Final Office Action dated Sep. 19, 2016", 16 pgs.
"U.S. Appl. No. 29/538,019, Notice of Allowance dated Nov. 23, 2016", 9 pgs.
"U.S. Appl. No. 29/539,396, Notice of Allowance dated Feb. 27, 2017", 9 pgs.
"U.S. Appl. No. 29/539,401, Notice of Allowance dated Feb. 27, 2017", 8 pgs.
"U.S. Appl. No. 29/539,391, Notice of Allowance dated Mar. 1, 2017", 8 pgs.
"U.S. Appl. No. 29/539,405, Notice of Allowance dated Mar. 1, 2017", 9 pgs.
"U.S. Appl. No. 29/539,409, Notice of Allowance dated Mar. 2, 2017", 8 pgs.
"U.S. Appl. No. 29/539,392, Notice of Allowance dated Mar. 3, 2017", 8 pgs.
"U.S. Appl. No. 29/539,415, Notice of Allowance dated Mar. 9, 2017", 8 pgs.
"U.S. Appl. No. 29/539,414, Notice of Allowance dated Mar. 13, 2017", 8 pgs.
"Broan QTX110SL Media Gallery, Broan QTX110SL Combintation Fan, Light, Night-Light, 110 CFM, 0.9 Sones, Humidity Sensing, Ventingdirect.com, p. 1.".
Nutone/Sterling Lighting Catalog NS103 .COPYRGT.1980, p. 57, Downlight #87, and p. 81, Recessed Square Light #XT-210.
Thomas Lighting Catalog .COPYRGT.1980, p. 145, Ceiling Lamp #R213, and p. 149, Fan-Light Unit #T342.
Thomas Industries Starlight Lighting Catalog. COPYRGT.1982, p. 61, Combined Fan-Light Heater T-305.
Emerson Environmental Products, Whole House Fan and Shutter System Owners Manual, Dec. 1982.
Photographs of Panasonic Ventilating Fan, Model FV-11.VHL1, available prior to Jan. 2, 2008, 3 pages.
Spartan Electric Company, Direct Drive Whole House Fans Publication, available prior to Jan. 2, 2008.
"Direct Drive Whole House Fans Publication", Spartan Electric Company, Fayetteville, N.C., (Feb. 4, 2008), 4 pgs.
"Whole House Fan and Shutter System Owners Manual", Emerson Environmental Products, Model No. WH20WS, Bennettsville, S. C., (Feb. 4, 2008), 12 pgs.
""""Whirlpool 30"" and 36"" Range Hood Models UXT3030AY/UXT3036AY", Installation Instructions and Use & Care Guide, [online] Retrieved from the Internet:<http://www.whirlpool.ca/digitalassets/UXT3030AYB/Use%20and%20Care_EN.pdf>, (2011), 28 pqs.
""""Maytag 30 in. Non-Vented Range Hood in Stainless Steel"", Model# UXT4030AYS, Home Depot, [online] [retrieved on Sep. 23, 2013]. Retrieved from the Internet:<http://www.homedepot.com/p/Maytag-30-in-Non-Vented-Range-Hood-in -Stainless-Steel-UXT4030AYS/202832999#customer_reviews>, (Jul. 9, 2011), 5 pgs.".
"Finnleo Steam Sauna Ventilation Wood grill", [Online]. Retrieved from the Internet: <https://www.tineye.com/search/8ff8db465e46f58bcad482160583c- b539dc23fa4/>, (Jun. 6, 2012).
"U.S. Appl. No. 11/968,250, Non Final Office Action dated Sep. 20, 2012", 21 pgs.
"U.S. Appl. No. 11/968,250, Response filed Dec. 20, 2012 to Non Final Office Action dated Sep. 20, 2012", 26 pgs.
"U.S. Appl. No. 11/968,250, Final Office Action dated Mar. 26, 2013", 20 pgs.
"U.S. Appl. No. 11/968,250, Response filed May 24, 2013 to Final Office Action dated Mar. 26, 2013", 34 pgs.
"U.S. Appl. No. 11/968,250, Advisory Action dated Jun. 24, 2013", 3 pgs.
"U.S. Appl. No. 11/968,250, Non Final Office Action dated Aug. 22, 2013", 18 pgs.
"U.S. Appl. No. 29/458,592, Non Final Office Action dated Sep. 27, 2013", 7 pgs.
"U.S. Appl. No. 11/968,250, Response filed Nov. 8, 2013 to Non Final Office Action dated Aug. 22, 2013", 23 pgs.
Grille Images, image post date Nov. 23, 2013, site visited May 14, 2016, (online), <https://www.tineye.com/search/ea95b48bdc1fce15b6d68e4fbe33c- 0e4e7566460/>.
"U.S. Appl. No. 29/458,592, Response filed Dec. 27, 2013 to Non Final Office Action dated Sep. 27, 2013, 8 pgs.".
"U.S. Appl. No. 11/968,250, Final Office Action dated Jan. 22, 2014", 18 pgs.
"U.S. Appl. No. 29/458,592, Notice of Allowance dated Mar. 4, 2014", 6 pgs.
Napoleon Prestige Pro 450—Natural Gas, image post date Apr. 5, 2014, site visited May 15, 2016, (online), <http://web.archive.org/web/20140405111728/http://www.bbqworld.co.uk/n- apoleon/napoleon-prestige-pro-450-natural-gas.asp>.
"Ultra Green series", [Online]. Retrieved from the Internet: <http://web.archive.org/web/20140416053348/http://www.broan com/products/filter/ultra-406c-abf1-ed72241eb706>, (Apr. 16, 2014).
"Airvent 435103 Kitchen Extractor Fan", [Online]. Retrieved from the Internet: <https://www.amazon.co.uk/Airvent-435103-Kitchen-Extractor-1- 50mm/dp/B0085TQ75U/ref=pd.sub.--cp.sub.--107.sub.--3?ie=UTF8&refRID=1XMRP1- Q1QR5H6NZ1MR7C>, (May 14, 2014).
"U.S. Appl. No. 11/968,250, Response filed May 22, 2014 to Final Office Action dated Jan. 22, 2014", 12 pgs.
"U.S. Appl. No. 11/968,250, Non Final Office Action dated Jun. 19, 2014", 18 pgs.
"U.S. Appl. No. 11/968,250, Response filed Sep. 19, 2014 to Non Final Office Action dated Jun. 19, 2014", 11 pgs.
Air Vent Grille Cover, image post date Nov. 9, 2014, site visited May 14, 2016, (online), <https://www/tineye.com/search/232b8f674998285163e7a3de47a03ed0ef9b1dc- 6/>.
GDL Air Distribution Grilles, image post date Nov. 23, 2014, site visited May 14, 2016, (online), <https://www.tineye.com/search/d0efdc23f3887a1bdc58adaa3fef15c33f2b486- b/>.
"U.S. Appl. No. 11/968,250, Final Office Action dated Nov. 26, 2014", 20 pgs.
"Manrose FF100P Bathroom Fan", [Online]. Retrieved from the Internet: <https://www.tineye.com/search/63988ff8b950dad9cb1aaec51119050bdd00cf2- 1/?pluginver=>, (Dec. 12, 2014).
"U.S. Appl. No. 29/458,589, Restriction Requirement dated Apr. 9, 2015", 7 pgs.

(56) **References Cited**

OTHER PUBLICATIONS

"U.S. Appl. No. 29/458,589, Response filed Apr. 27, 2015 to Restriction Requirement dated Apr. 9, 2015", 4 pgs.
"Canadian Application Serial No. 163,017, Office Action dated Nov. 9, 2015", 3 pgs.
"Canadian Application Serial No. 163,018, Office Action dated Nov. 9, 2015", 2 pgs.
"Canadian Application Serial No. 163,019, Office Action dated Nov. 9, 2015", 2 pgs.
"Canadian Application Serial No. 163,015, Office Action dated Nov. 10, 2015", 5 pgs.
"Canadian Application Serial No. 163,016, Office Action dated Nov. 10, 2015", 3 pgs.
"U.S. Appl. No. 29/521,663, Restriction Requirement dated Dec. 3, 2015", 6 pgs.
"U.S. Appl. No. 29/521,663, Response filed Feb. 2, 2016 to Restriction Requirement dated Dec. 3, 2015", 3 pgs.
U.S. Appl. No. 29/521,663, Notice of Allowance dated Feb. 12, 2016, 7 pgs.
"Canadian Application Serial No. 165,307, Office Action dated Feb. 15, 2016" W/ English Translation, 2 pgs.
"Canadian Application Serial No. 165,355, Office Action dated Feb. 15, 2016", 2 pgs.
"Canadian Application Serial No. 165,366, Office Action dated Feb. 15, 2016", with English Translation, 2 pgs.
"Canadian Application Serial No. 163,017, Response filed Mar. 9, 2016 to Office Action dated Nov. 9, 2015", 8 pgs.
"Canadian Application Serial No. 163,018, Response filed Mar. 9, 2016 to Office Action dated Nov. 9, 2015", 7 pgs.
"Canadian Application Serial No. 163,019, Response filed Mar. 9, 2016 to Office Action dated Nov. 9, 2015", 7 pgs.
"U.S. Appl. No. 29/489,619, Notice of Allowance dated Apr. 15, 2015", 13 pgs.
"U.S. Appl. No. 29/489,619, Response filed Jan. 14, 2015 to Restriction Requirement dated Dec. 3, 2014", 6 pgs.
"U.S. Appl. No. 29/489,619, Restriction Requirement dated Dec. 3, 2014", 7 pgs.
"Canadian Application Serial No. 159,363, Office Action dated Mar. 27, 2015".
"Chinese Application Serial No. 201430427547.0 Response filed May 26, 2015 to Office Action dated Mar. 11, 2015", 7 pgs.
"Canadian Application Serial No. 163,780, Office Action dated Sep. 14, 2015", 2 pgs.
"Canadian Application Serial No. 163,780, Response filed Jan. 8, 2016 to Office Action dated Sep. 14, 2015", 4 pgs.
"Canadian Application Serial No. 164,084, Office Action dated Jan. 28, 2016", 1 pg.
"Canadian Application Serial No. 164,084, Office Action dated Sep. 9, 2015", 2 pgs.
"Canadian Application Serial No. 164,084, Response filed Jan. 6, 2016 to Office Action dated Sep. 9, 2015", 10 pgs.

* cited by examiner

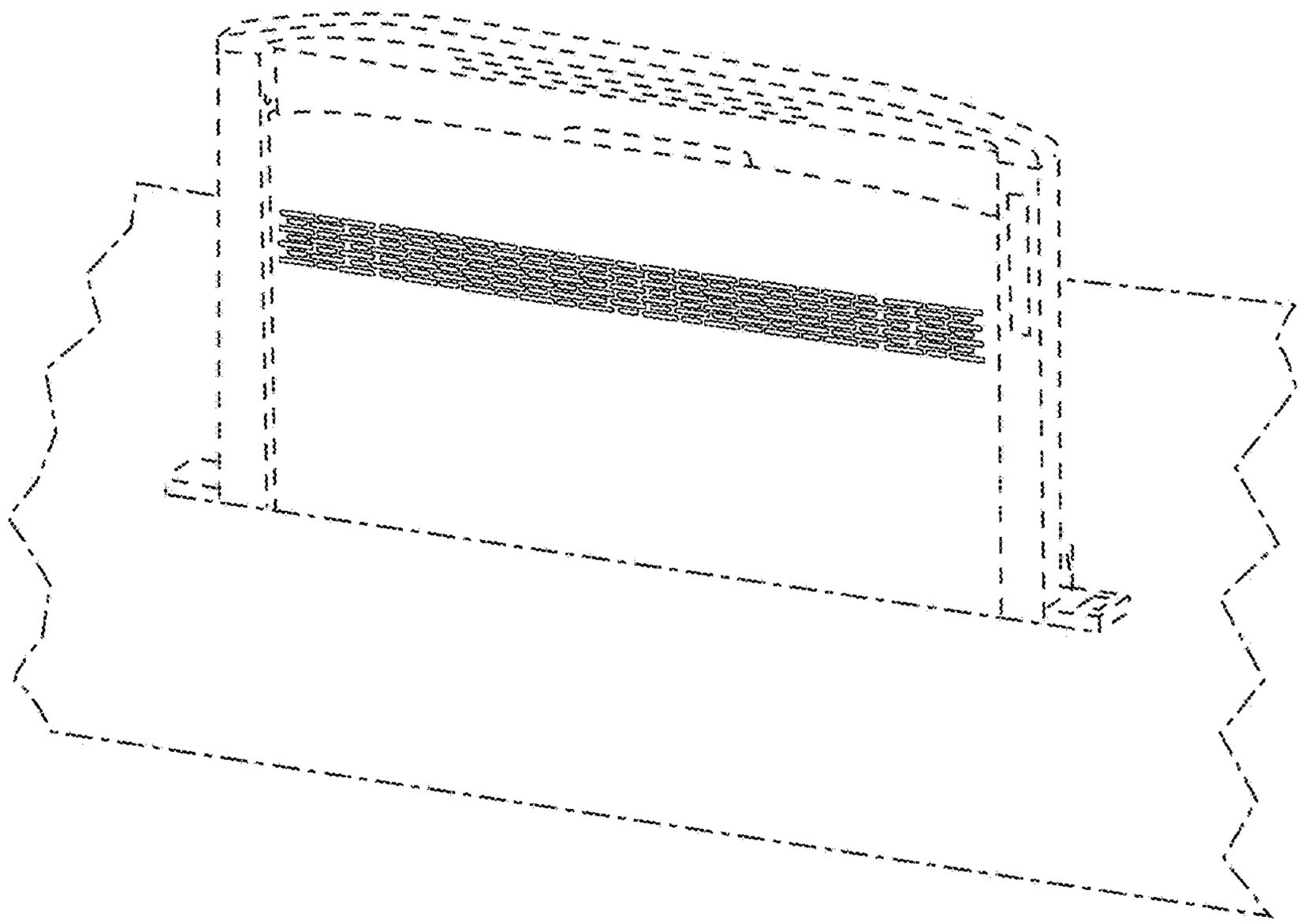

FIG. 1

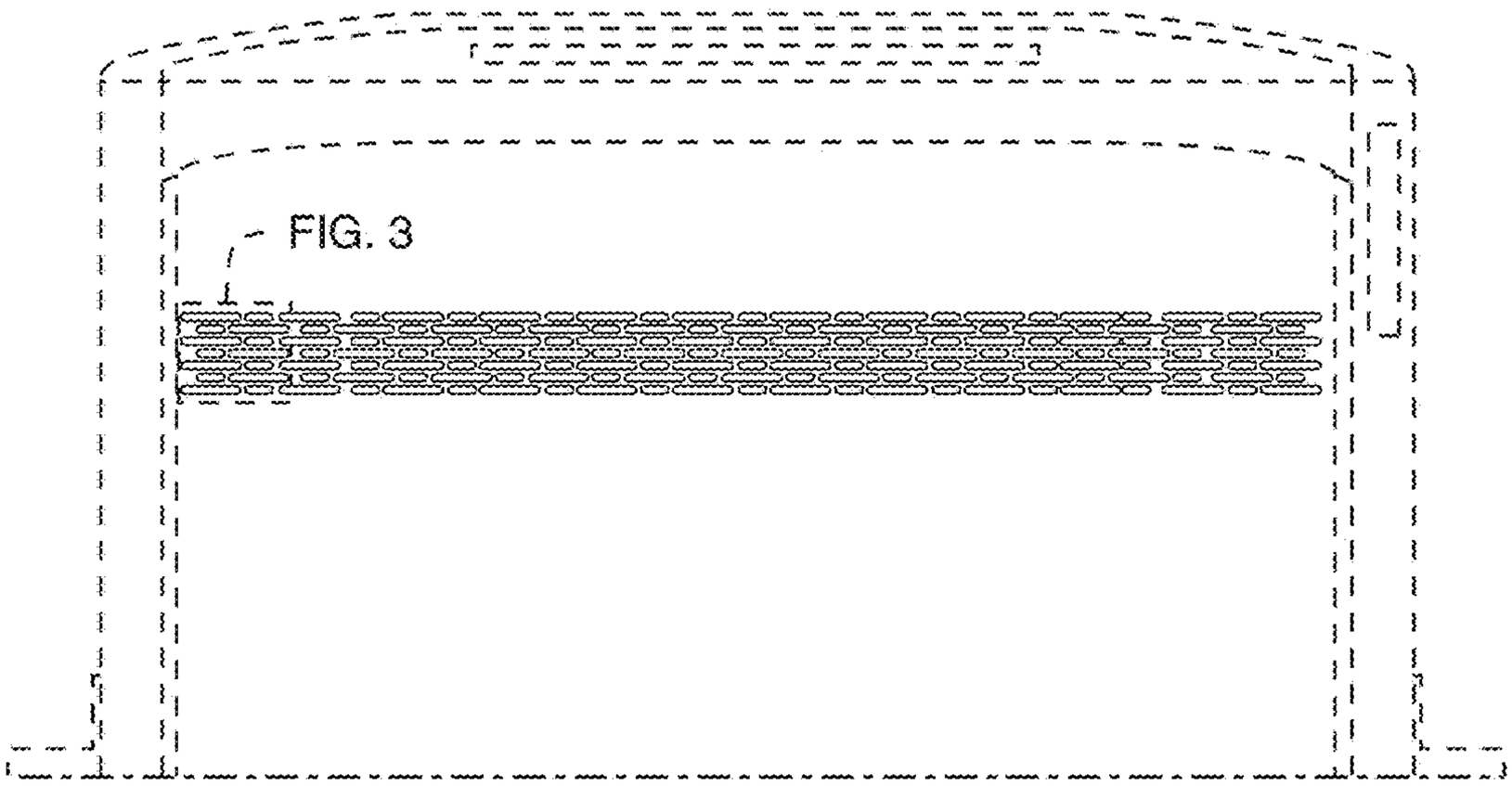

FIG. 2

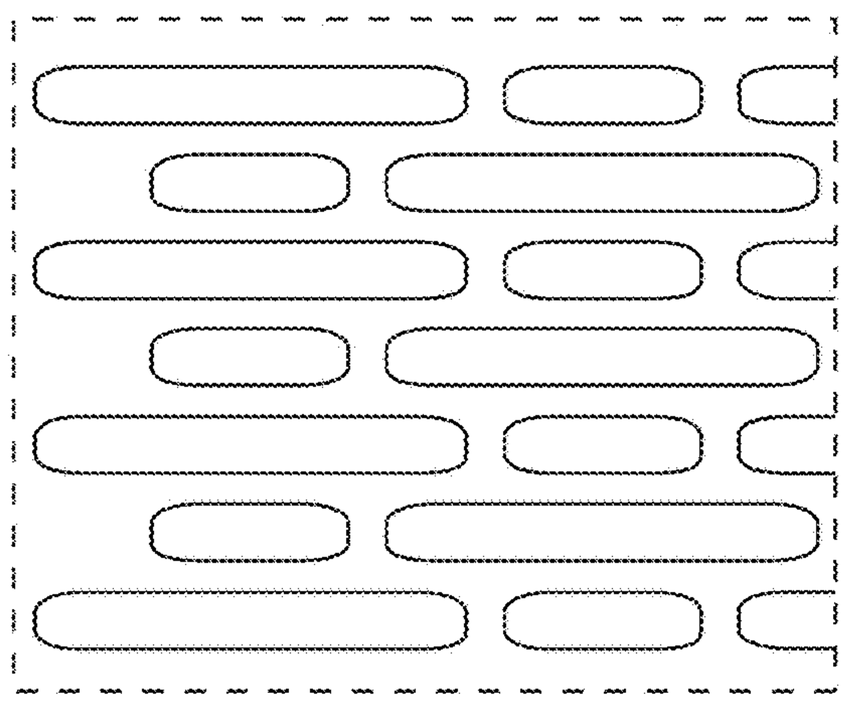

FIG. 3