US00D849568S

(12) United States Design Patent

Klein et al.

(10) Patent No.: US D849,568 S
(45) Date of Patent: ** May 28, 2019

(54) **BIOREACTOR CONTROLLER**

(71) Applicant: **LIFE TECHNOLOGIES CORPORATION**, Carlsbad, CA (US)

(72) Inventors: **Sandro Klein**, Irvine, CA (US); **Xin Mathers**, Poway, CA (US); **Wei Fuh Teo**, Singapore (SG)

(73) Assignee: **Life Technologies Corporation**, Carlsbad, CA (US)

(**) Term: **15 Years**

(21) Appl. No.: **29/611,127**

(22) Filed: **Jul. 19, 2017**

(51) **LOC (11) Cl.** **10-04**

(52) **U.S. Cl.**
USPC **D10/49**; D10/75; D13/162

(58) **Field of Classification Search**
USPC D10/49, 75; D13/162, 162.1, 163, 164
CPC C12P 7/065; Y02E 50/17; C12M 41/22; C12M 23/02; C12M 23/24; C12M 29/00; C12M 41/14; C12M 41/26; C12M 41/34; C12M 41/48; C12M 21/00; C12M 21/02; C12M 21/04; C12M 21/06; C12M 21/08; C12M 21/10; C12M 21/12; C12M 21/14; C12M 21/16; C12M 21/18; C12M 231/00; C12M 23/52; C12M 23/54; C12M 23/56; C12M 23/58; C12M 23/44; C12Q 3/00; G05D 21/02; G05B 15/02
See application file for complete search history.

(56) **References Cited**

U.S. PATENT DOCUMENTS

D251,114 S * 2/1979 Potts D10/75
D293,173 S * 12/1987 Chester D13/163
D704,078 S * 5/2014 Mueller B01L 7/52 D10/49
2017/0072398 A1* 3/2017 Boo B01L 7/52

* cited by examiner

Primary Examiner — Antoine Duval Davis
(74) *Attorney, Agent, or Firm* — Michael J. Smith

(57) **CLAIM**

The ornamental design for a bioreactor controller, as shown and described.

DESCRIPTION

FIG. **1** is a front-perspective view of a first embodiment of a bioreactor controller for our new design.
FIG. **2** is a rear-perspective view of a first embodiment of a bioreactor controller for our new design.
FIG. **3** is a front view of a first embodiment of a bioreactor controller for our new design.
FIG. **4** is a rear view of a first embodiment of a bioreactor controller for our new design.
FIG. **5** is a right-side view of a first embodiment of a bioreactor controller for our new design.
FIG. **6** is a left-side view of a first embodiment of a bioreactor controller for our new design.
FIG. **7** is a top view of a first embodiment of a bioreactor controller for our new design; and,
FIG. **8** is a bottom view of a first embodiment of a bioreactor controller for our new design.
The portions of the features depicted in broken lines are not part of the claimed design.

1 Claim, 8 Drawing Sheets

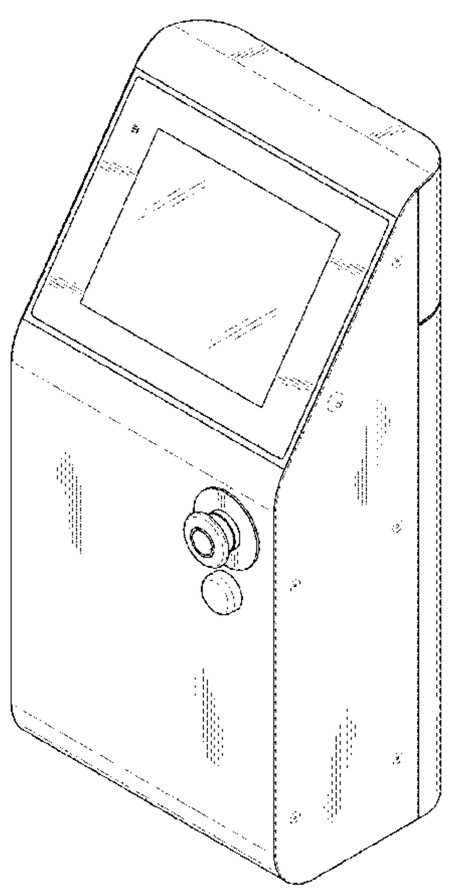

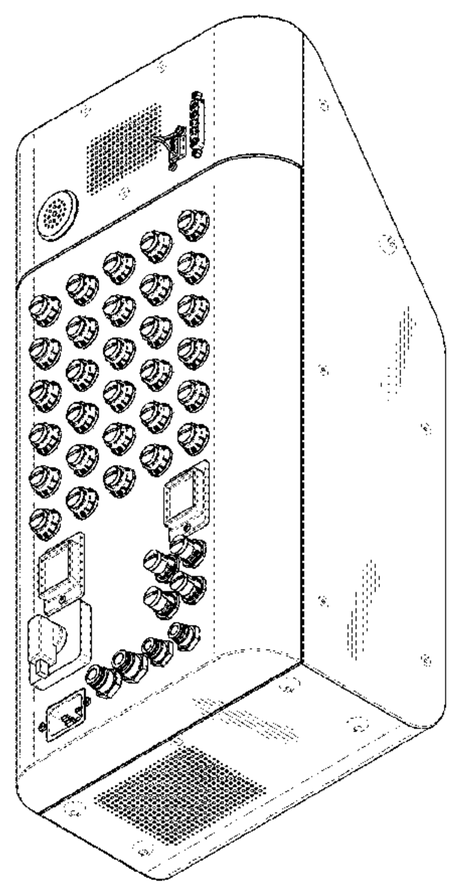

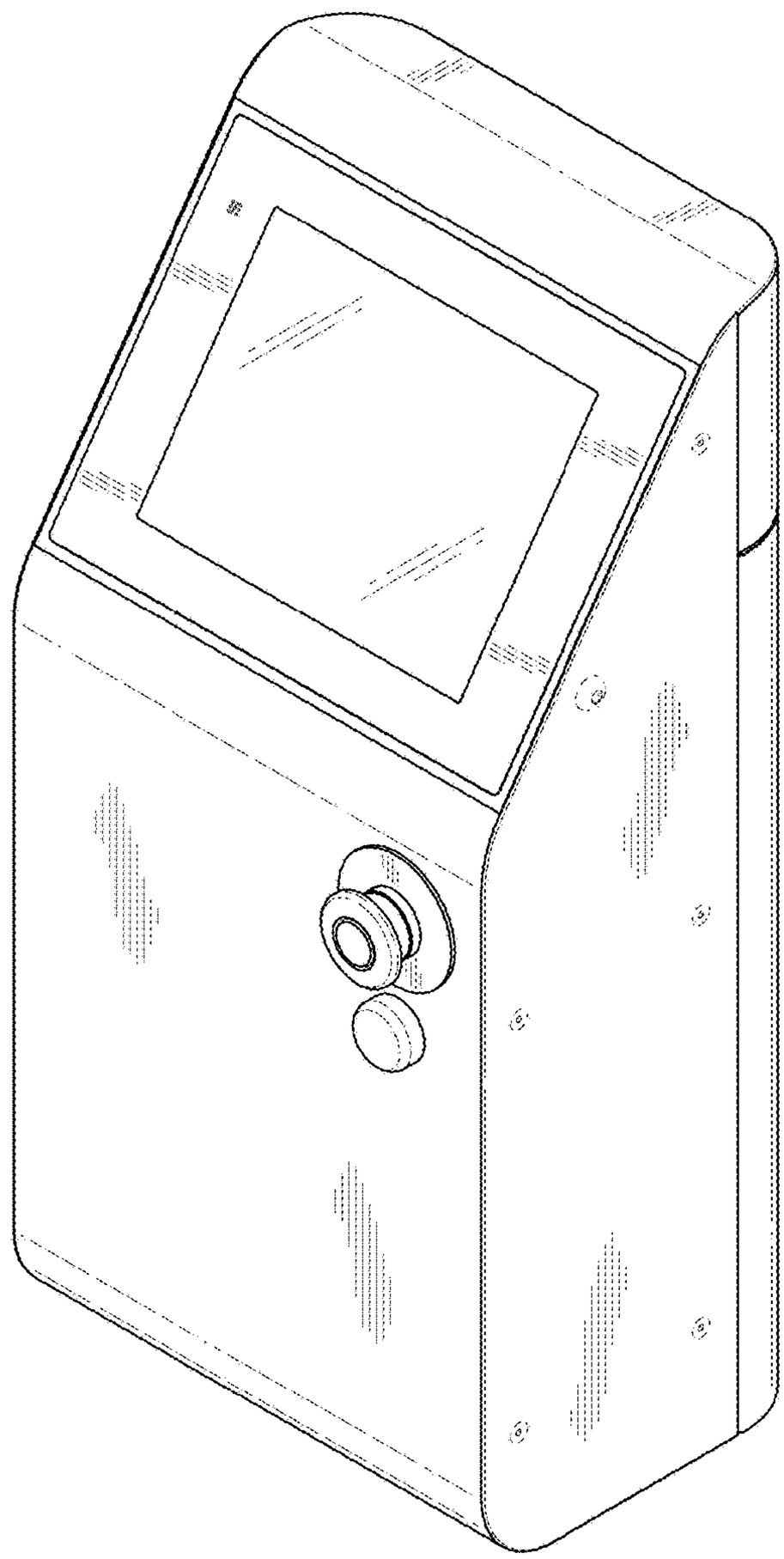

FIG. 1

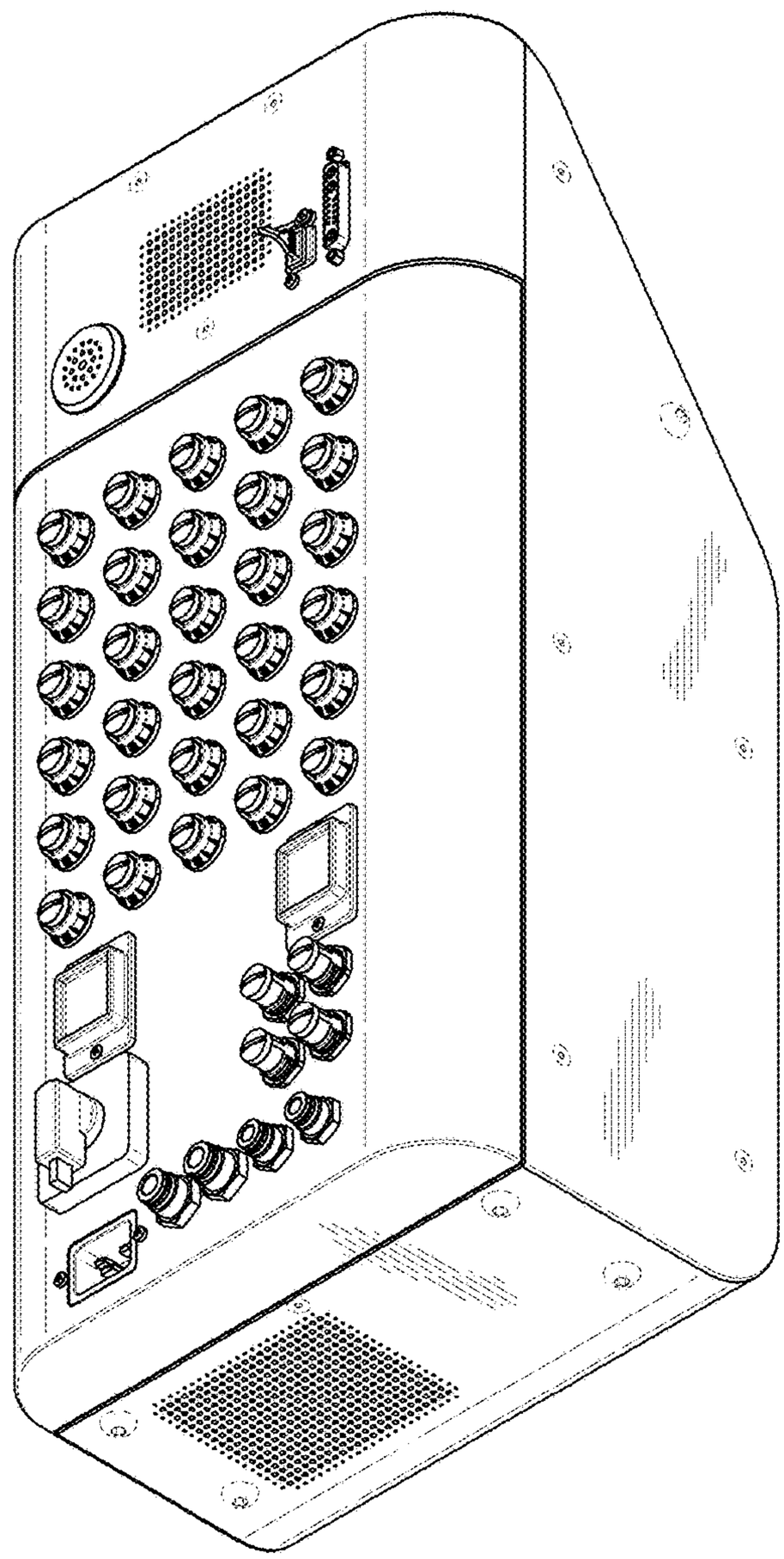

FIG. 2

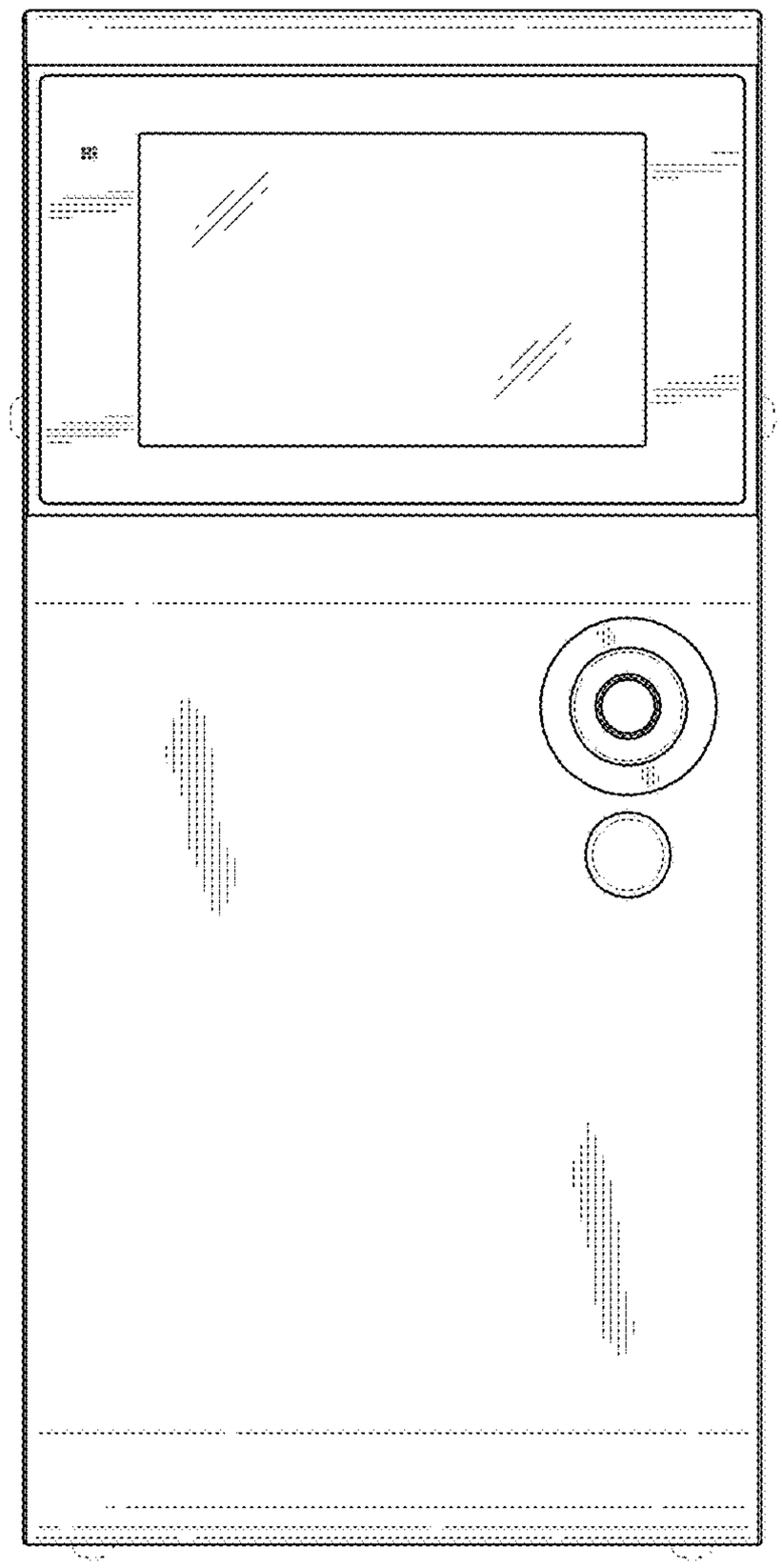

FIG. 3

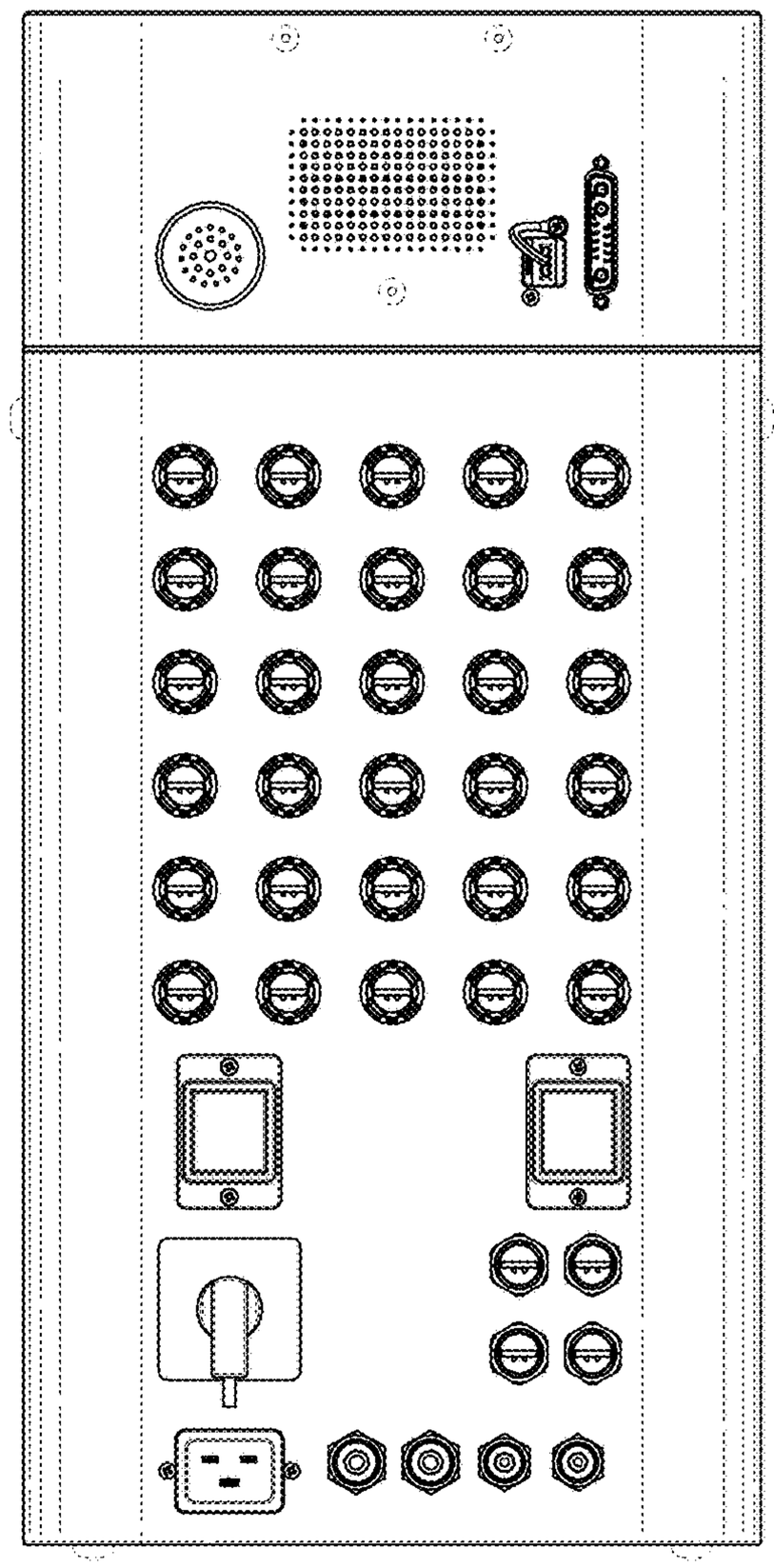

FIG. 4

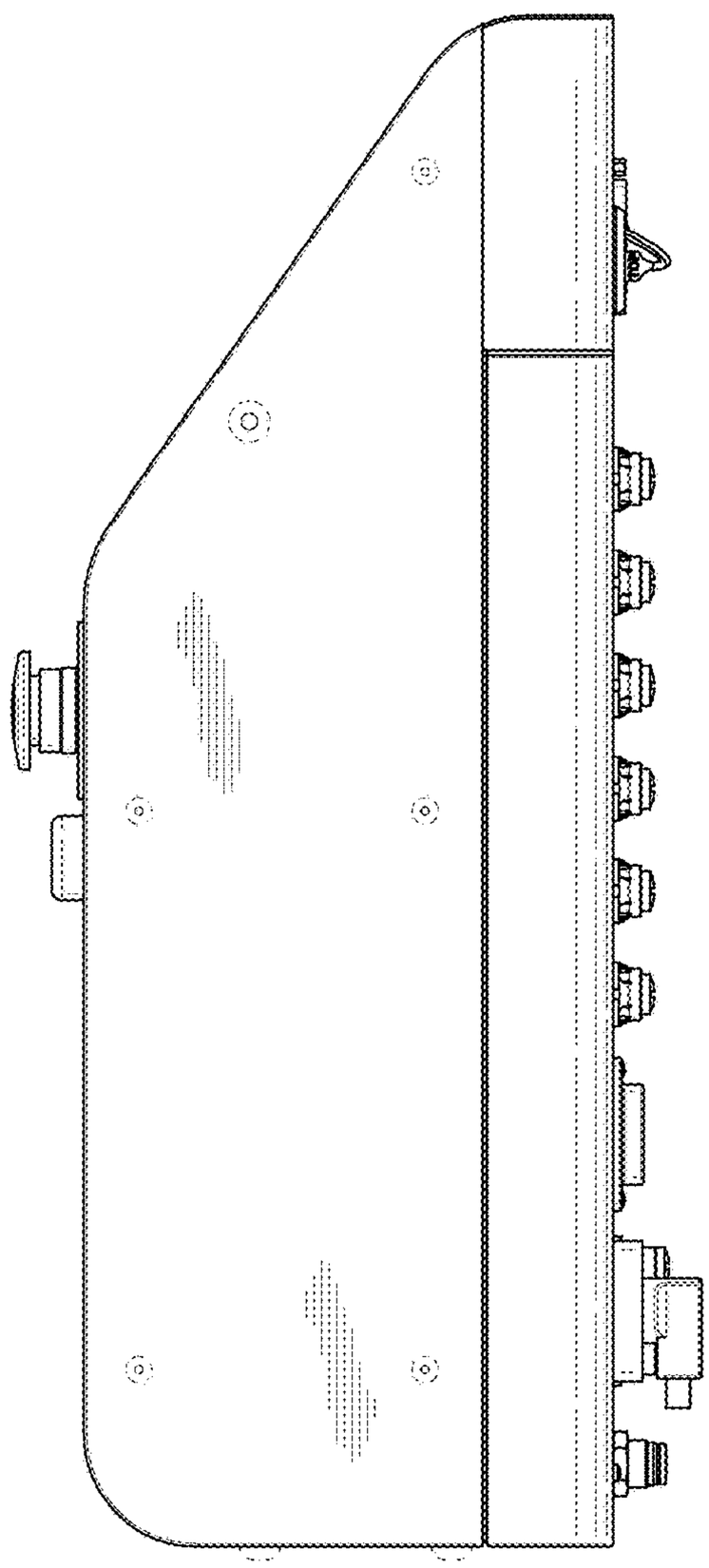

FIG. 5

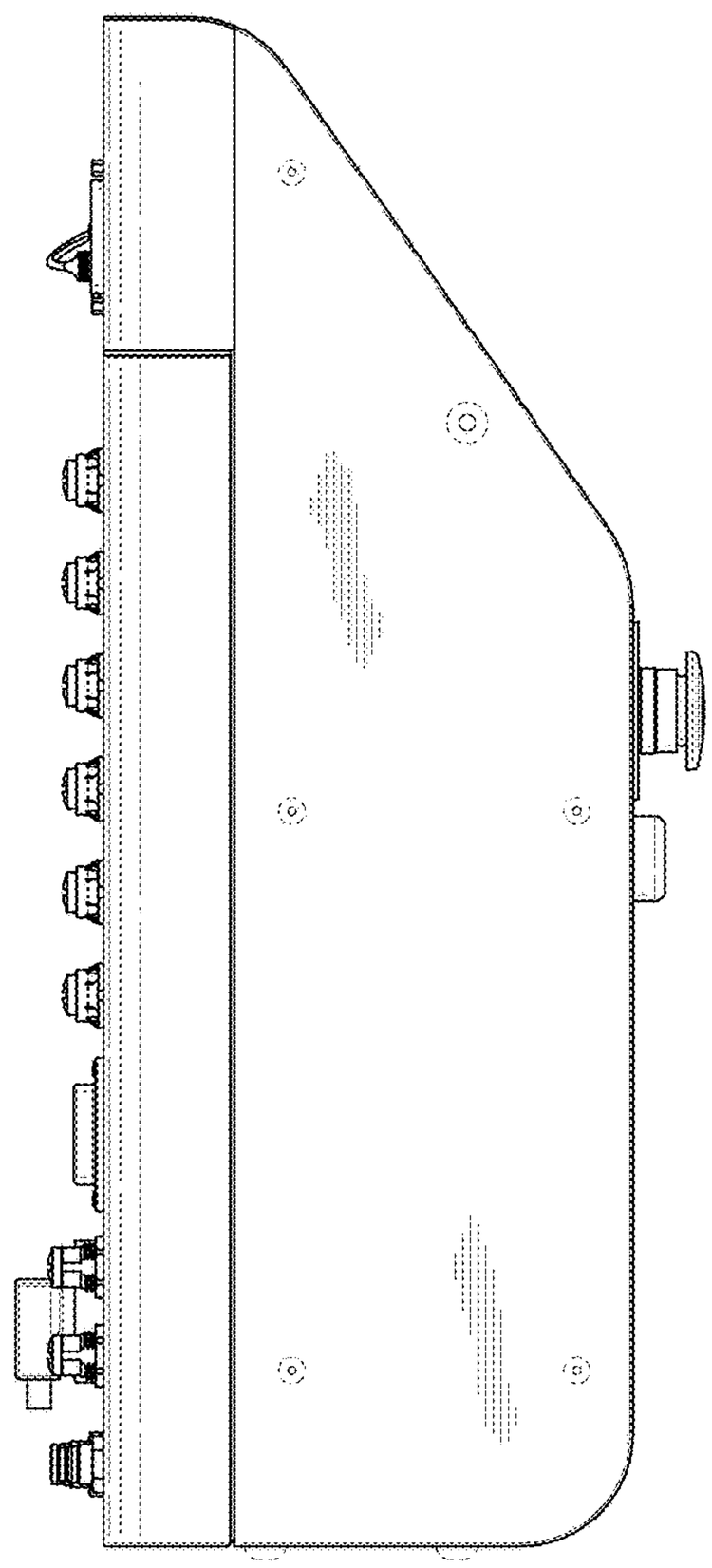

FIG. 6

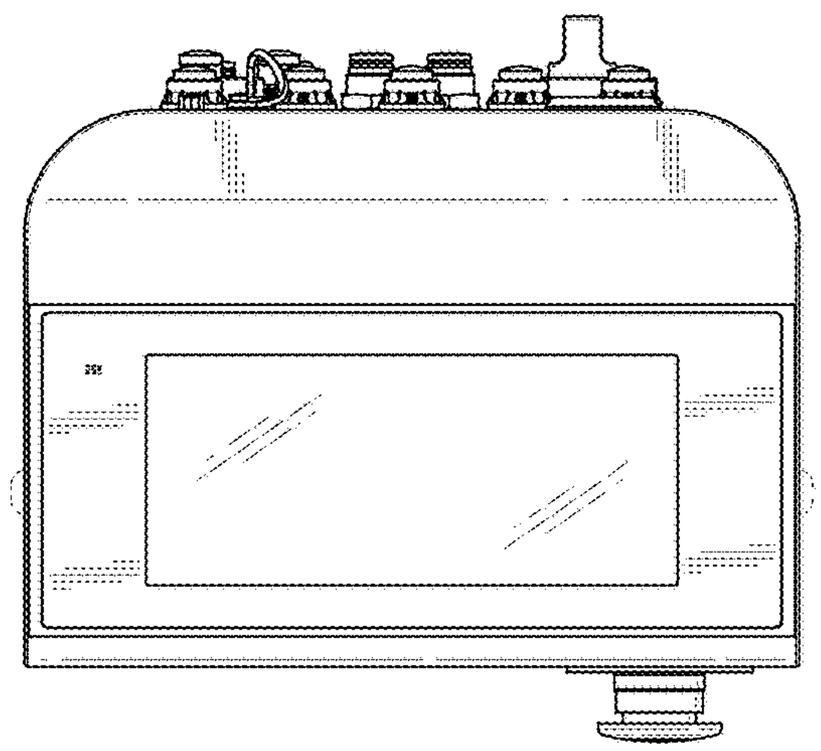

FIG. 7

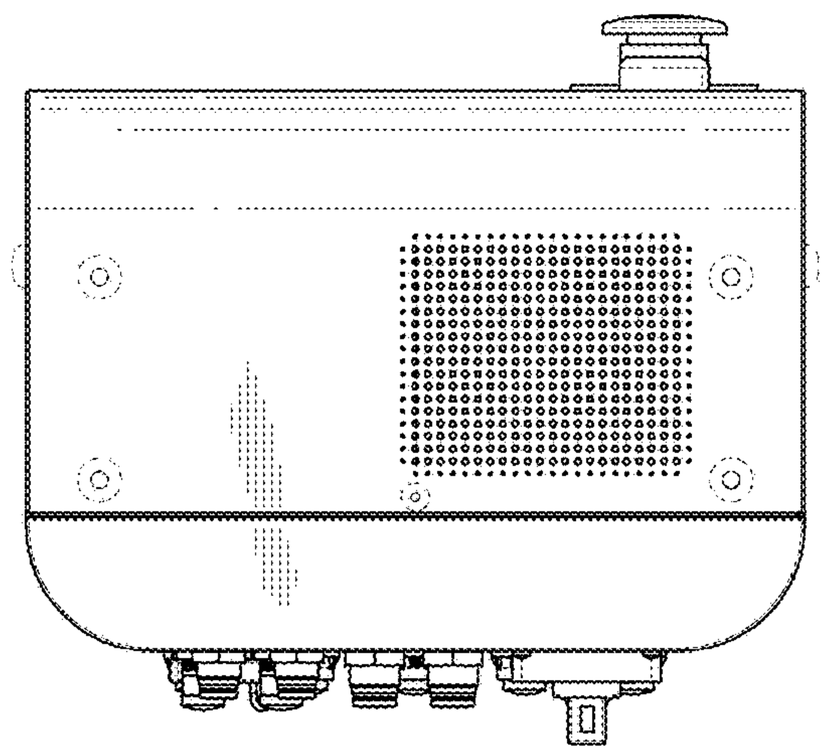

FIG. 8