US00D848960S

(12) United States Design Patent

Fan et al.

(10) Patent No.: US D848,960 S
(45) Date of Patent: ** May 21, 2019

(54) **WATER COOLING RADIATOR**

(71) Applicant: **AURAS Technology Co., Ltd.**, New Taipei (TW)

(72) Inventors: **Mu-Shu Fan**, New Taipei (TW); **Che-Chia Chang**, New Taipei (TW); **Yi-Wun Chen**, New Taipei (TW)

(73) Assignee: **AURAS TECHNOLOGY CO., LTD.**, New Taipei (TW)

(**) Term: **15 Years**

(21) Appl. No.: **29/634,391**

(22) Filed: **Jan. 22, 2018**

(30) **Foreign Application Priority Data**

Nov. 10, 2017 (TW) 106306602

(51) **LOC (11) Cl.** **13-03**

(52) **U.S. Cl.**
USPC **D13/179**

(58) **Field of Classification Search**
USPC D13/179, 182; D15/199; D26/138, 141, D26/152, 142, 63; D14/435, 436, 447; D23/330
CPC ... H01L 23/473; H01L 23/4735; H01L 23/46; H01L 23/467; H01L 23/4006; H01L 23/427; H01L 23/3672; F28D 15/00; F28D 15/02; F28D 15/0275; F28D 3/02; G06F 1/20; G06F 2200/201; F28F 1/025; F28F 1/325; H05K 7/20263; H05K 7/20272; H05K 7/20281
See application file for complete search history.

(56) **References Cited**

U.S. PATENT DOCUMENTS

D235,067 S * 5/1975 Rasmussen D23/330
D571,314 S * 6/2008 Horng D13/179
D574,790 S * 8/2008 Song D13/179
D694,199 S * 11/2013 Lin D13/179
D722,577 S * 2/2015 Zimmer D13/179
D777,123 S * 1/2017 Yensen D13/182
D777,124 S * 1/2017 Hasegawa D13/182
D829,673 S * 10/2018 Mira D13/179
2007/0246205 A1* 10/2007 Lee F28F 3/048 165/170
2008/0006393 A1* 1/2008 Grimm H05K 7/20172 165/84
2010/0128431 A1* 5/2010 Eriksen G06F 1/20 361/679.47
2012/0103575 A1* 5/2012 Tang H01L 23/473 165/104.31
2013/0146254 A1* 6/2013 Jeon H05K 7/20927 165/104.11

(Continued)

OTHER PUBLICATIONS

CoolIT, "Closed-Loop DCLC", Cached version dated Nov. 10, 2017. (https://www.coolitsystems.com/closed-loop-dclc/) (Year: 2017).*

(Continued)

Primary Examiner — Jennifer Rivard
Assistant Examiner — April Rivas
(74) *Attorney, Agent, or Firm* — WPAT, PC

(57) **CLAIM**

The ornamental design for a water cooling radiator, as shown and described in the drawings.

DESCRIPTION

FIG. **1** is a perspective view of the water cooling radiator showing my new design.
FIG. **2** is a front view thereof;
FIG. **3** is a back view thereof;
FIG. **4** is a left view thereof;
FIG. **5** is a right view thereof;
FIG. **6** is a top view thereof; and,
FIG. **7** is a bottom view thereof.

1 Claim, 5 Drawing Sheets

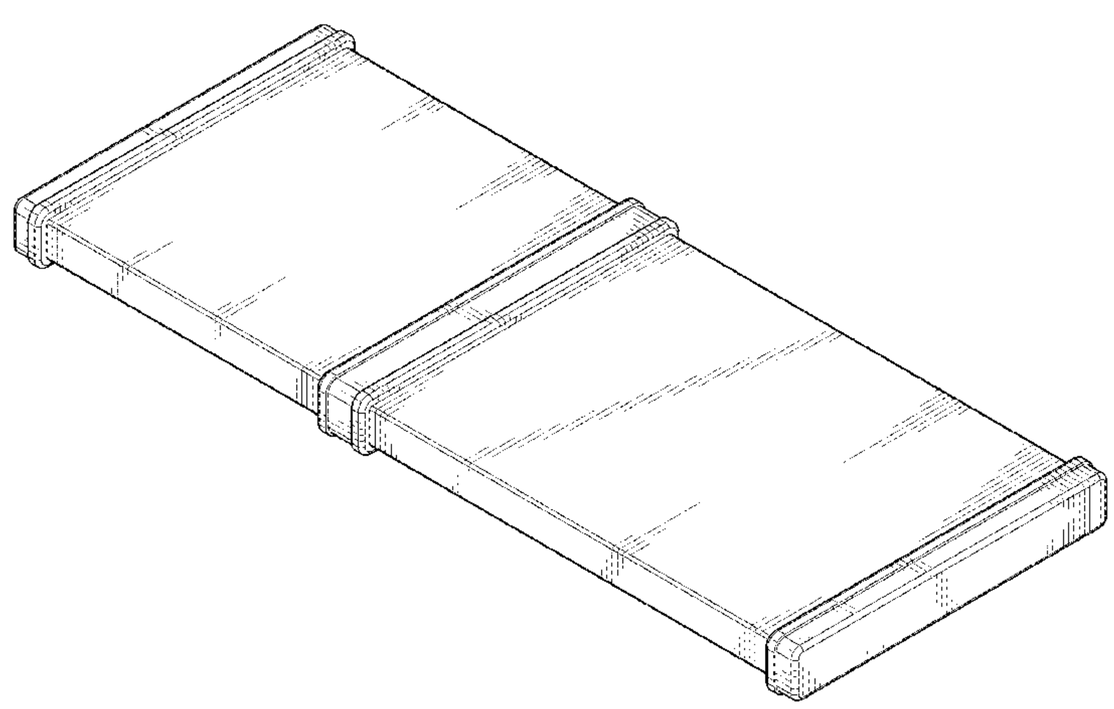

(56) **References Cited**

U.S. PATENT DOCUMENTS

2014/0008039	A1*	1/2014	Liu	F28D 15/00 165/104.13
2016/0234967	A1*	8/2016	Choi	H05K 7/20918
2016/0366788	A1*	12/2016	Liao	H05K 7/20272
2017/0030493	A1*	2/2017	Han	H01L 23/473
2017/0186667	A1*	6/2017	Choudhury	H01L 23/473
2017/0257979	A1*	9/2017	Wu	H05K 7/20263
2017/0367217	A1*	12/2017	Xiao	H05K 7/20272
2018/0092246	A1*	3/2018	Chiu	F28F 1/24
2018/0114738	A1*	4/2018	Mitsui	H01L 23/467
2018/0269131	A1*	9/2018	Na	H01L 23/4006

OTHER PUBLICATIONS

Amazon, "NZXT Kraken X61 280mm All-in-One CPU Liquid Cooling System", First on sale Jun. 16, 2014. (https://www.amazon.com/Kraken-Liquid-Cooling-System-RL-KRX61-01/dp/B00L0YLJJG) (Year: 2014).*

Amazon, "EKWB EK-CoolStream SE 280 Radiator, Slim Dual, Black", First on sale Oct. 13, 2017. (https://www.amazon.com/EKWB-EK-CoolStream-Radiator-Slim-Black/dp/B076FFMR7Y/) (Year: 2017).*

* cited by examiner

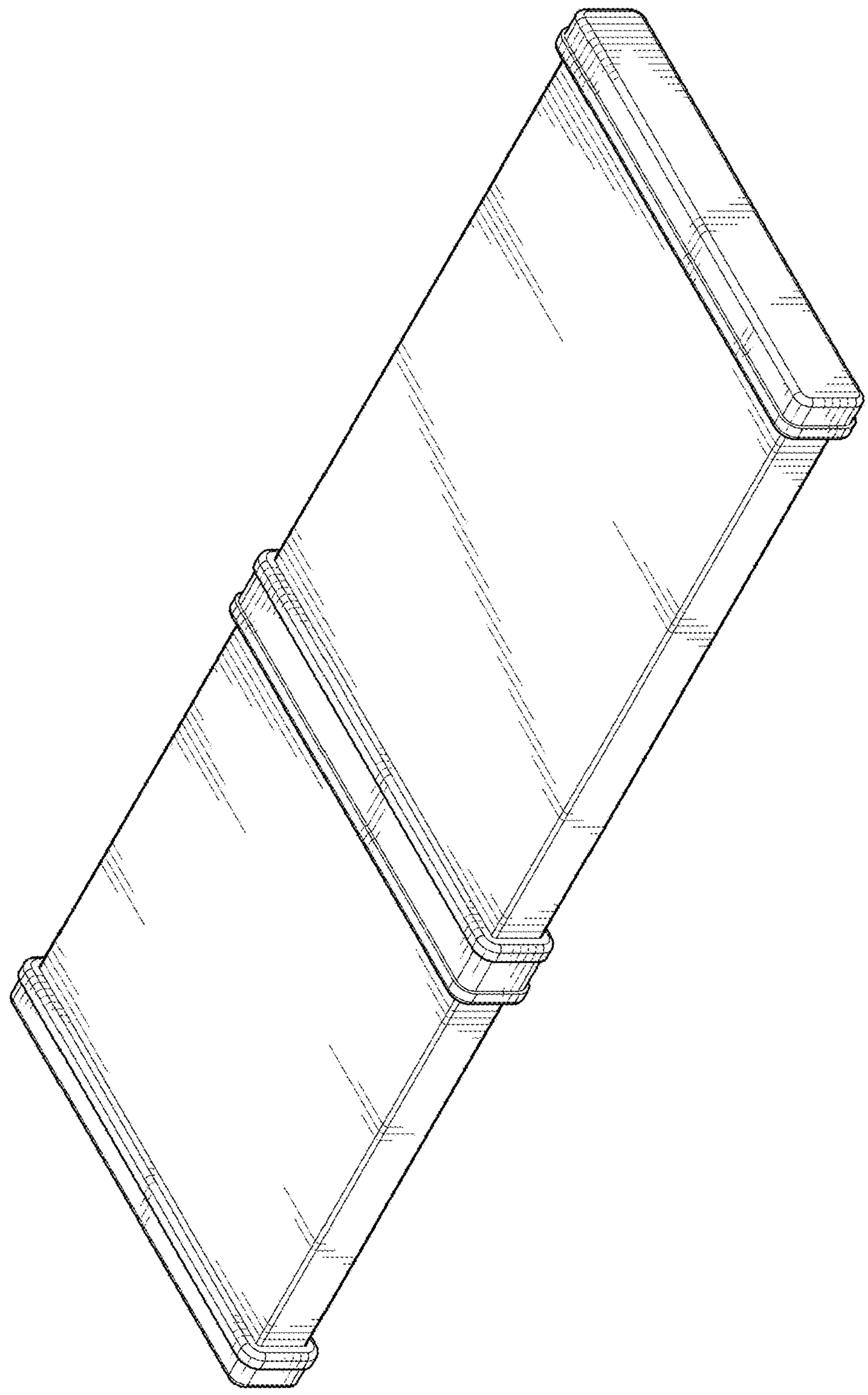

FIG. 1

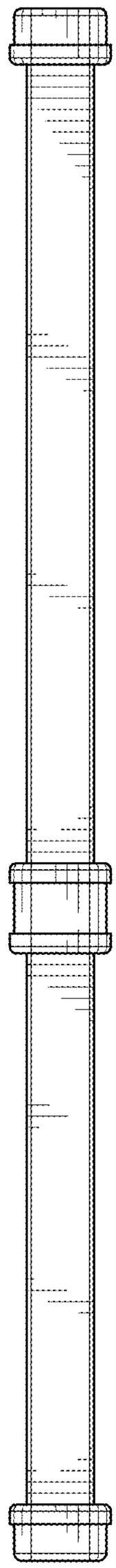

FIG. 2

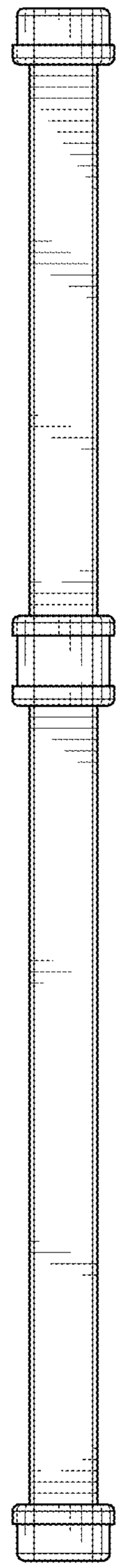

FIG. 3

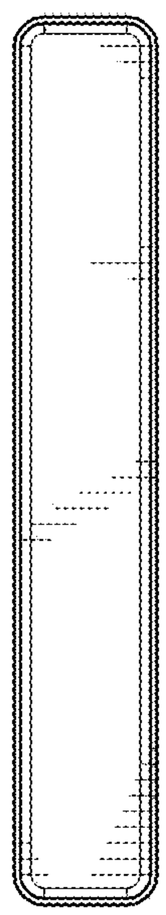

FIG. 4

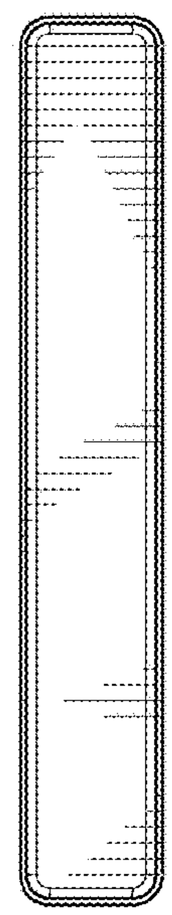

FIG. 5

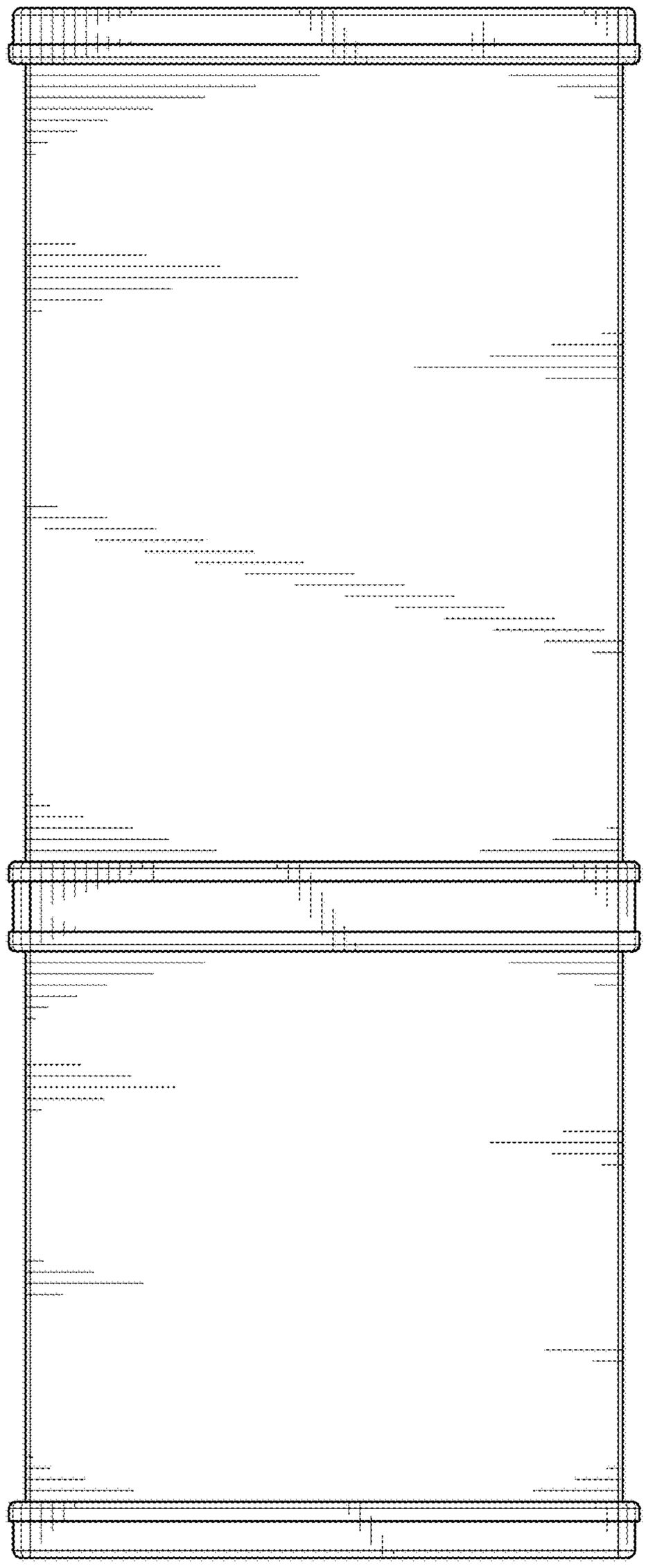

FIG. 6

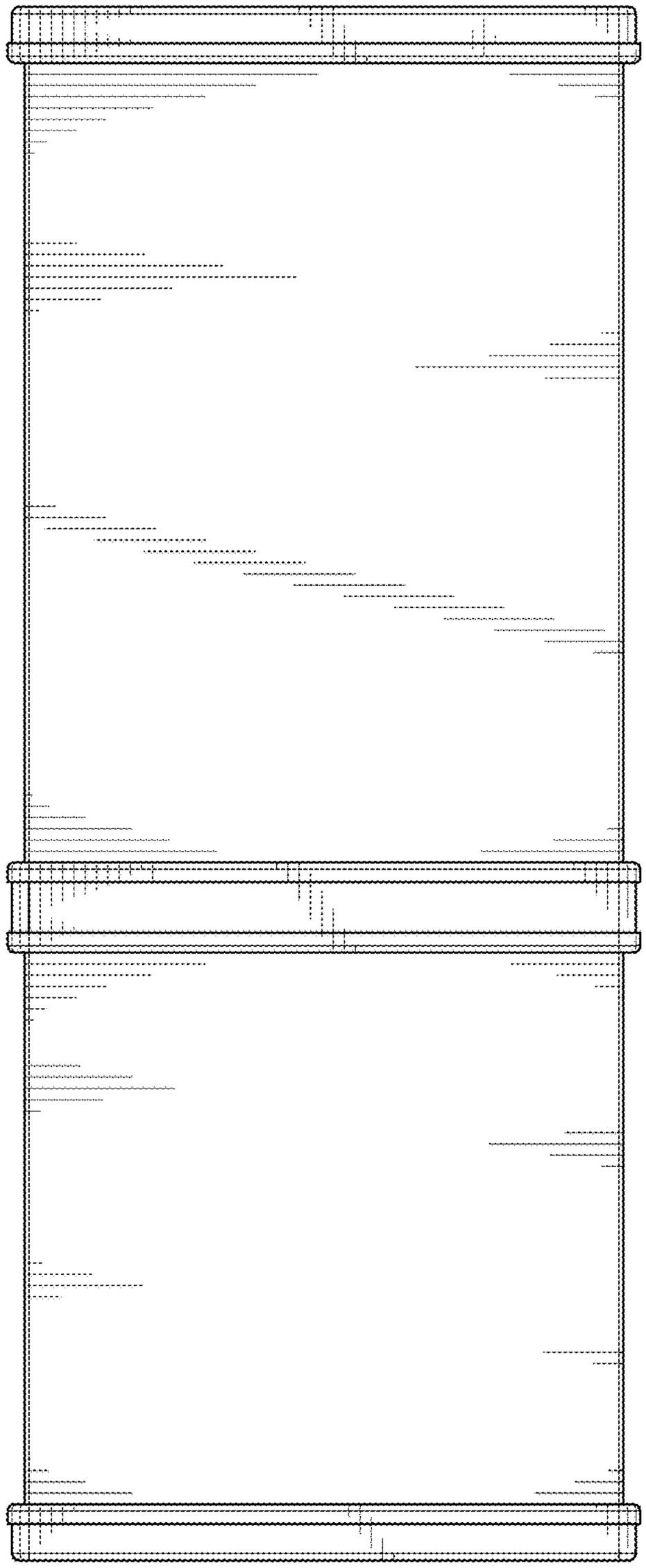

FIG. 7