US00D848066S

(12) United States Design Patent

Coulton et al.

(10) Patent No.: US D848,066 S
(45) Date of Patent: ** May 7, 2019

(54) **ACCESSORY FOR HAIR STYLING AND HAIR CARE APPARATUS**

(71) Applicant: **Dyson Technology Limited**, Wiltshire (GB)

(72) Inventors: **Robert Mark Brett Coulton**, Bristol (GB); **Annmarie Rita Nicolson**, Bristol (GB); **Emma Victoria Carson**, Swindon (GB); **Daniel John Thompson**, Bristol (GB); **Alexander Stuart Knox**, Swindon (GB); **Andrea Ee-Va Lim**, Bristol (GB); **Weiyi Chia**, Singapore (SG); **Stephen Benjamin Courtney**, Gloucester (GB); **Wei Jie Lam**, Singapore (SG)

(73) Assignee: **Dyson Technology Limited**, Malmesbury, Wiltshire (GB)

(**) Term: **15 Years**

(21) Appl. No.: **29/627,693**

(22) Filed: **Nov. 29, 2017**

(30) **Foreign Application Priority Data**

May 30, 2017 (EM) 004024644-0001

(51) **LOC (11) Cl.** **28-03**

(52) **U.S. Cl.**
USPC **D28/18**

(58) **Field of Classification Search**
USPC D28/18, 24, 25, 10, 12, 13, 15, 34; D4/100, 102, 11, 117, 127, 128; 34/96–98; 392/380, 383–385; 239/135, 239/128, 270
CPC A45D 20/12; A45D 20/00; A45D 20/10; A45D 20/08
See application file for complete search history.

(56) **References Cited**

U.S. PATENT DOCUMENTS

D256,280	S		8/1980	Haase	
D256,846	S		9/1980	Haase	
4,232,454	A		11/1980	Springer	
D259,665	S		6/1981	Cousins	
D277,417	S		1/1985	Wistrand	
D322,892	S	*	1/1992	Kwok-Fai Au	D4/100
5,157,757	A		10/1992	McDougall	
D386,816	S	*	11/1997	Seifert	D28/18
D398,073	S		9/1998	Kip	
D398,074	S		9/1998	Nosenchuck	
D409,796	S	*	5/1999	Moreno	D28/18
D425,663	S		5/2000	Greubel et al.	
D439,012	S	*	3/2001	McCurrach	D28/13
D439,701	S	*	3/2001	Engelen	D28/13
D448,115	S	*	9/2001	White	D28/18
D457,730	S	*	5/2002	McCurrach	D28/10
6,460,272	B2		10/2002	Cheng	
D476,443	S	*	6/2003	Ohta	D28/18
6,662,811	B2	*	12/2003	Mugge	A45D 24/22 132/228
D506,030	S		6/2005	Lai	
D510,192	S	*	10/2005	Kampel	D4/128
6,962,159	B1		11/2005	Adam	
7,096,598	B1	*	8/2006	Myatt	A45D 20/52 34/96
D557,017	S	*	12/2007	Kampel	D4/128
D609,857	S		2/2010	Schmitz	
D676,600	S		2/2013	Thrasher, Jr.	
D700,018	S		2/2014	Thrash	
D754,313	S		4/2016	Ellis et al.	
D775,418	S		12/2016	Stephens et al.	
D775,419	S		12/2016	Stephens et al.	
D776,345	S		1/2017	Tang	
D782,731	S		3/2017	Smith et al.	
D782,732	S		3/2017	Smith et al.	
D782,733	S		3/2017	Smith et al.	
D782,734	S		3/2017	Sutter et al.	
D790,785	S		6/2017	Courtney et al.	
D791,407	S		7/2017	Smith et al.	
D798,502	S		9/2017	Smith et al.	
D800,454	S		10/2017	Mathieu	
9,808,067	B2		11/2017	Sutter et al.	
D810,927	S		2/2018	Ross et al.	
D811,009	S		2/2018	Smith et al.	
D814,130	S		3/2018	Taub	
D815,837	S		4/2018	Zhou	
D817,643	S	*	5/2018	Valle	D4/100
9,986,810	B2		6/2018	Bobillier et al.	
D823,004	S	*	7/2018	Kuo	D4/128
D823,005	S	*	7/2018	Kuo	D4/128
10,021,951	B2		7/2018	Bobillier et al.	
10,028,574	B2	*	7/2018	Rennette	A46B 9/023
2014/0083446	A1		3/2014	Julemont et al.	
2016/0166033	A1		6/2016	Kerr et al.	
2016/0166035	A1		6/2016	Douglas et al.	

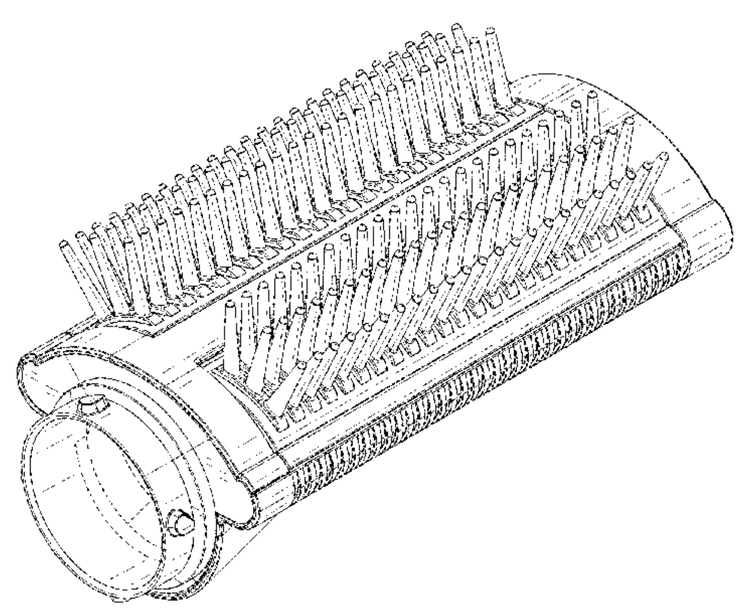

2016/0206075	A1	7/2016	Stephens et al.	
2016/0206076	A1	7/2016	Stephens et al.	
2016/0206077	A1	7/2016	Stephens et al.	
2016/0338464	A1	11/2016	Wilkinson et al.	
2016/0338465	A1	11/2016	Wilkinson et al.	
2017/0112256	A1	4/2017	Bobillier et al.	
2017/0164709	A1	6/2017	Laveni et al.	
2017/0273422	A1	9/2017	Heffer et al.	
2017/0273425	A1	9/2017	Stephens et al.	
2017/0273428	A1*	9/2017	Nicolson	A45D 20/50
2017/0273429	A1*	9/2017	Nicolson	A45D 20/50
2017/0273431	A1	9/2017	Courtney et al.	
2018/0055181	A1	3/2018	Spark et al.	
2018/0055184	A1	3/2018	McVeigh et al.	

OTHER PUBLICATIONS

Coulton et al, U.S. Office Action dated Sep. 14, 2018, directed to U.S. Appl. No. 29/627,694; 9 pages.
Coulton et al., U.S. Office Action dated Aug. 31, 2018, directed to U.S. Appl. No. 29/627,665; 8 pages.
Coulton et al., U.S. Office Action dated Oct. 30, 2018, directed to U.S. Appl. No. 29/627,739; 7 pages.
Coulton et al., U,S. Office Action dated Oct. 30, 2018, directed to U.S. Appl. No. 29/627,749; 7 pages.
Coulton et al., U.S. Office Action dated Oct. 30, 2018, directed to U.S. Appl. No. 29/627,752; 7 pages.
Coulton et al., U.S. Office Action dated Oct. 30, 2018, directed to U.S. Appl. No. 29/627,754; 7 pages.
Coulton et al., U.S. Office Action dated Oct. 30, 2018, directed to U.S. Appl. No. 29/627,773; 8 pages.
Coulton et al., U.S. Office Action dated Sep. 10, 2018, directed to U.S. Appl. No. 29/627,690; 7 pages.
Coulton et al., U.S. Office Action dated Sep. 14, 2018, directed to U.S. Appl. No. 29/627,707; 9 pages.
Heffer et al., U.S. Office Action dated Aug. 16, 2018, directed to U.S. Appl. No. 29/627,688; 8 pages.
Heffer et al., U.S. Office Action dated Aug. 16, 2018, directed to U.S. Appl. No. 29/627,712; 8 pages.
Heffer et al., U.S. Office Action dated Aug. 16, 2018, directed to U.S. Appl. No. 29/627,713; 8 pages.
Heffer et al., U.S. Office Action dated Aug. 16, 2018, directed to U.S. Appl. No. 29/627,730; 8 pages.
Tappenden et al., U.S. Office Action dated Oct. 17, 2018, directed to U.S. Appl. No. 29/627,727; 6 pages.
Tappenden et al., U.S. Office Action dated Aug. 8, 2018, directed to U.S. Appl. No. 29/627,660; 7 pages.
Tappenden et al., U.S. Office Action dated Aug. 8, 2018, directed to U.S. Appl. No. 29/627,664; 7 pages.
Tappenden et al., U.S. Office Action dated Aug. 8, 2018, directed to U.S. Appl. No. 29/627,668; 7 pages.
Tappenden et al., U.S. Office Action dated Aug. 8, 2018, directed to U.S. Appl. No. 29/627,671; 7 pages.
Tappenden et al., U.S. Office Action dated Aug. 8, 2018, directed to U.S. Appl. No. 29/627,673; 7 pages.
Tappenden et al., U.S. Office Action dated Aug. 8, 2018, directed to U.S. Appl. No. 29/627,677; 7 pages.
Tappenden et al., U.S. Office Action dated Aug. 8, 2018, directed to U.S. Appl. No. 29/627,678; 7 pages.
Tappenden et al., U.S. Office Action dated Aug. 8, 2018, directed to U.S. Appl. No. 29/627,714; 7 pages.
Tappenden et al., U.S. Office Action dated Oct. 1, 2018, directed to U.S. Appl. No. 29/627,717; 6 pages.
Tappenden et al., U.S. Office Action dated Oct. 17, 2018, directed to U.S. Appl. No. 29/627,723; 6 pages.
Tappenden et al., U.S. Office Action dated Oct. 17, 2018, directed to U.S. Appl. No. 29/627,731; 6 pages.
Tappenden et al., U.S. Office Action dated Oct. 17, 2018, directed to U.S. Appl. No. 29/627,733; 6 pages.
Tappenden et al., U.S. Office Action dated Oct. 17, 2018, directed to U.S. Appl. No. 29/627,734; 6 pages.
Tappenden et al., U.S. Office Action dated Oct. 17, 2018, directed to U.S. Appl. No. 29/627,735; 6 pages.
Tappenden et al., U.S. Office Action dated Sep. 27, 2018, directed to U.S. Appl. No. 29/627,700; 6 pages.
Tappenden et al., U.S. Office Action dated Sep. 27, 2018, directed to U.S. Appl. No. 29/627,702; 6 pages.
Tappenden et al., U.S. Office Action dated Sep. 27, 2018, directed to U.S. Appl. No. 29/627,705; 6 pages.
Tappenden et al., U.S. Office Action dated Sep. 27, 2018, directed to U.S. Appl. No. 29/627,706; 6 pages.
Tappenden et al., U.S. Office Action dated Sep. 27, 2018, directed to U.S. Appl. No. 29/627,710; 6 pages.
Tappenden et al., U.S. Office Action dated Sep. 27, 2018, directed to U.S. Appl. No. 29/627,724; 6 pages.
Tappenden et al., U.S. Office Action dated Sep. 27, 2018, directed to U.S. Appl. No. 29/627,725; 6 pages.
Tappenden et al., U.S. Office Action dated Sep. 27, 2018, directed to U.S. Appl. No. 29/627,726; 6 pages.
Tappenden et al., U.S. Office Action dated Sep. 28, 2018, directed to U.S. Appl. No. 29/627,719; 6 pages.

* cited by examiner

Primary Examiner — Susan Bennett Hattan
Assistant Examiner — Rebecca Tsehaye
(74) *Attorney, Agent, or Firm* — Morrison & Foerster LLP

(57) **CLAIM**

We claim the ornamental design for an accessory for hair styling and hair care apparatus, as shown and described.

DESCRIPTION

FIG. **1** is a bottom perspective view of an accessory for hair styling and hair care apparatus showing our new design;
FIG. **2** is a top perspective view thereof;
FIG. **3** is a side view thereof;
FIG. **4** is a top view thereof;
FIG. **5** is a bottom view thereof;
FIG. **6** is a front view thereof; and,
FIG. **7** is a rear view thereof.
The view opposite the side view of FIG. **3** is a mirror image thereof and, therefore, is omitted.
The broken lines in the drawings depict portions of the accessory for hair styling and hair care apparatus that form no part of the claimed design.

1 Claim, 7 Drawing Sheets

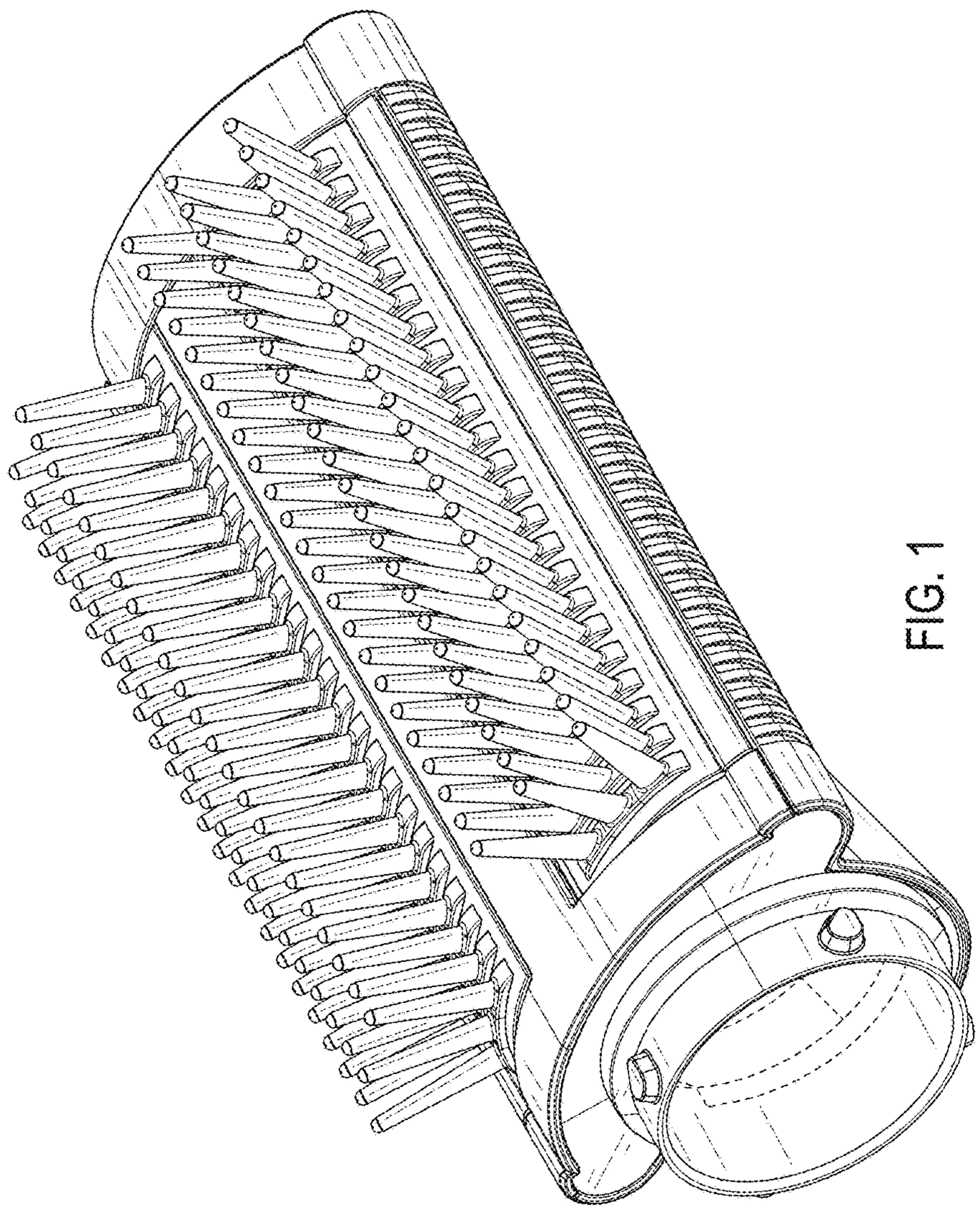

FIG. 1

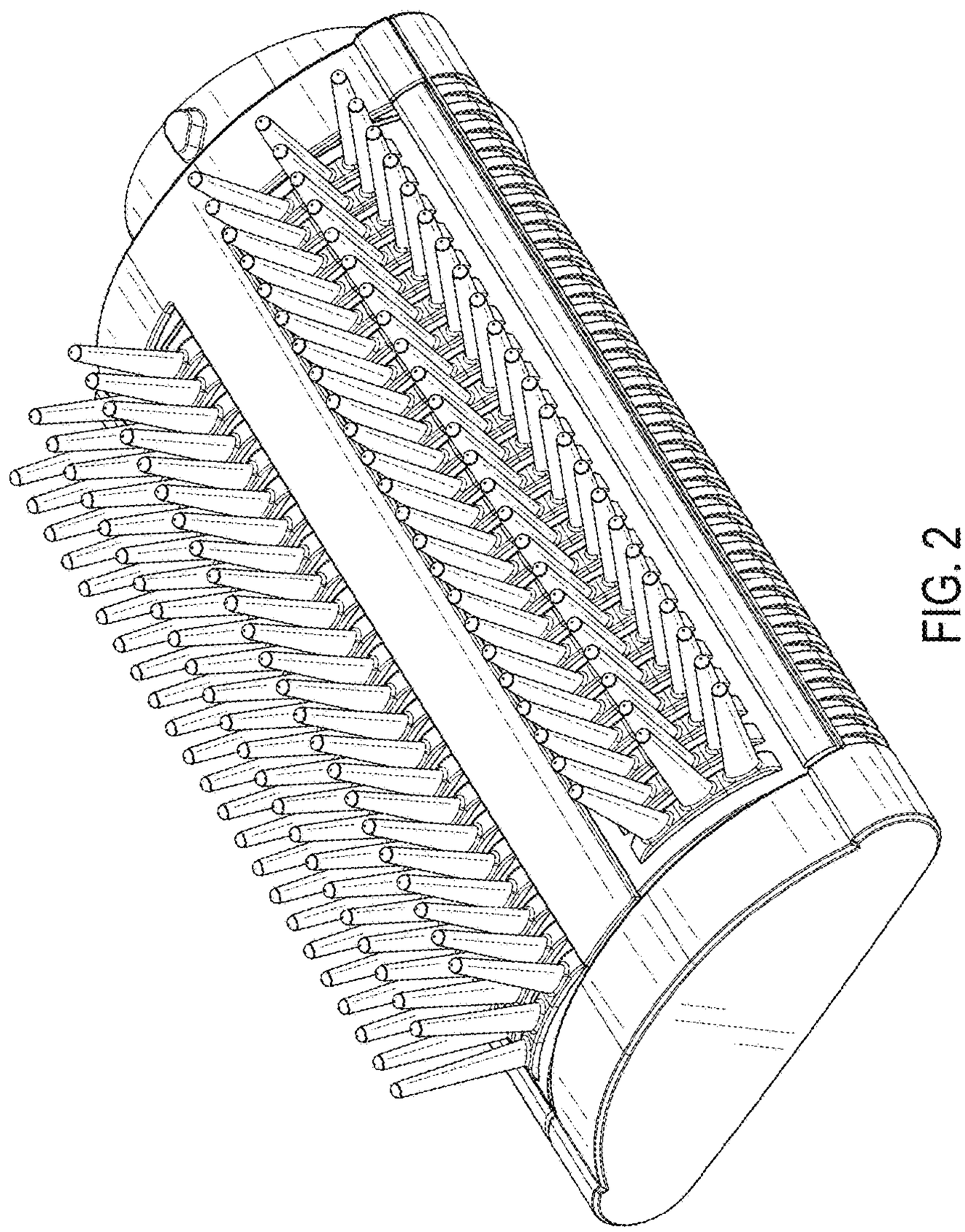

FIG. 2

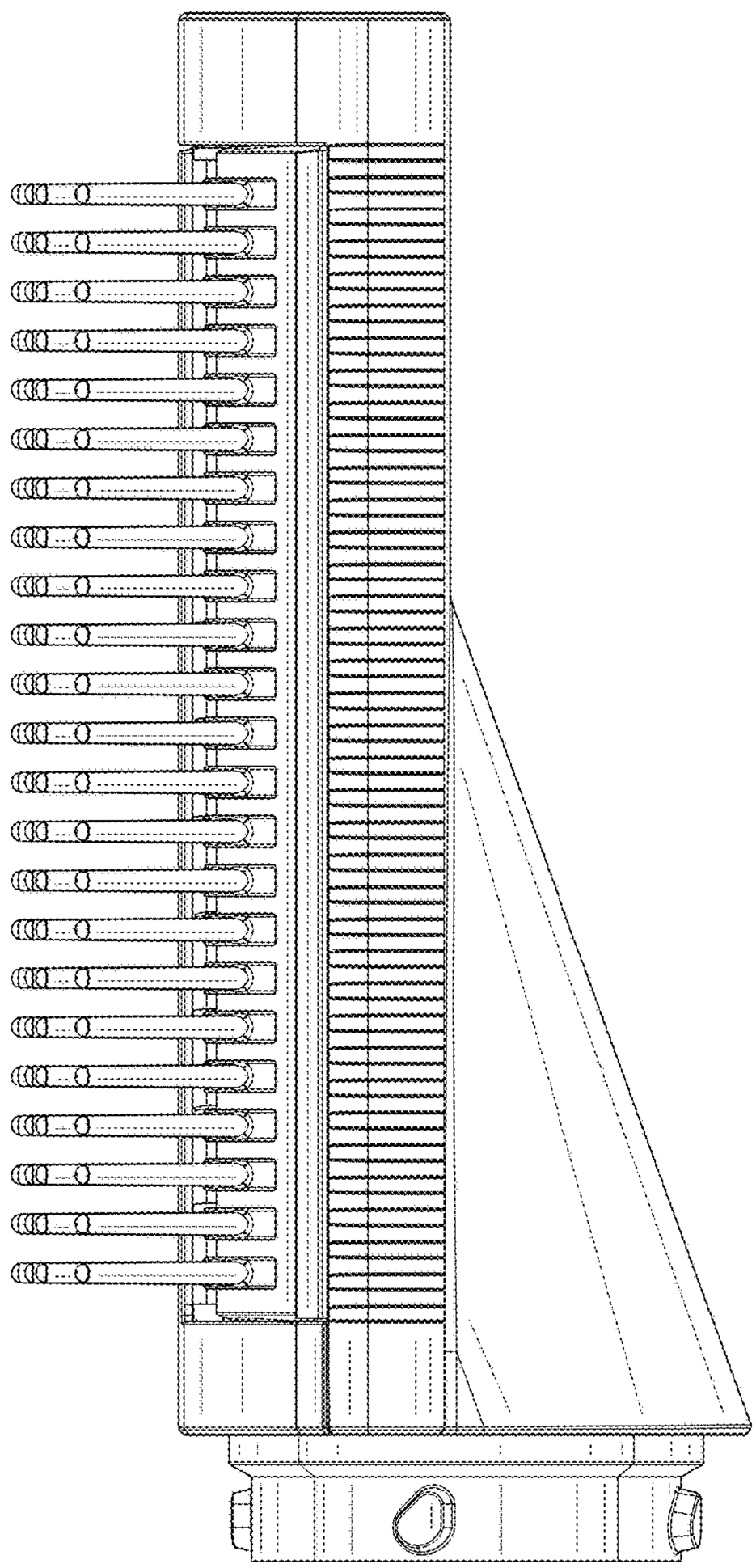

FIG. 3

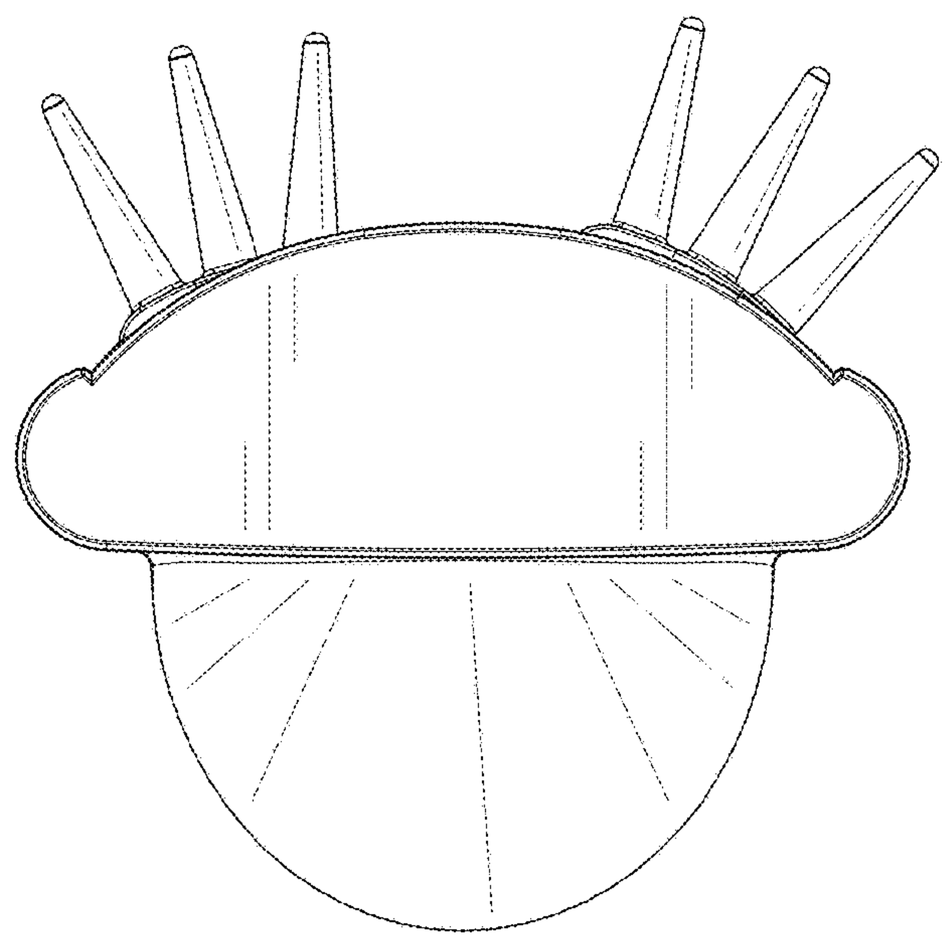

FIG. 4

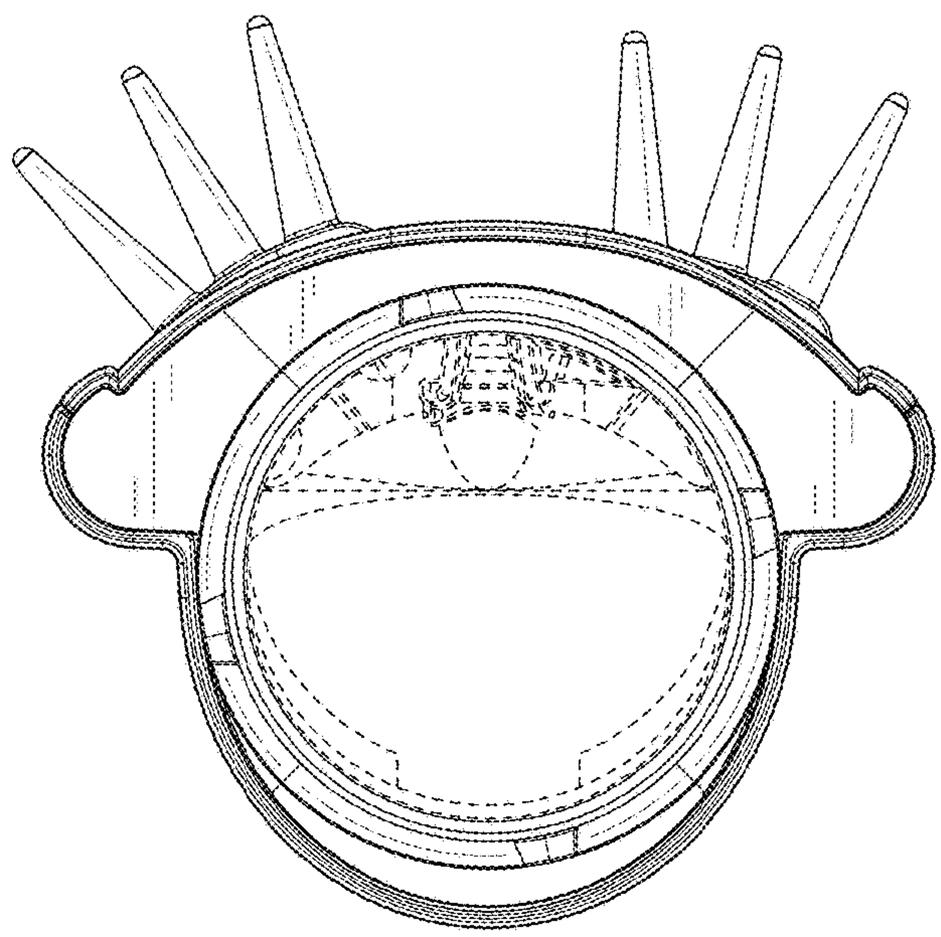

FIG. 5

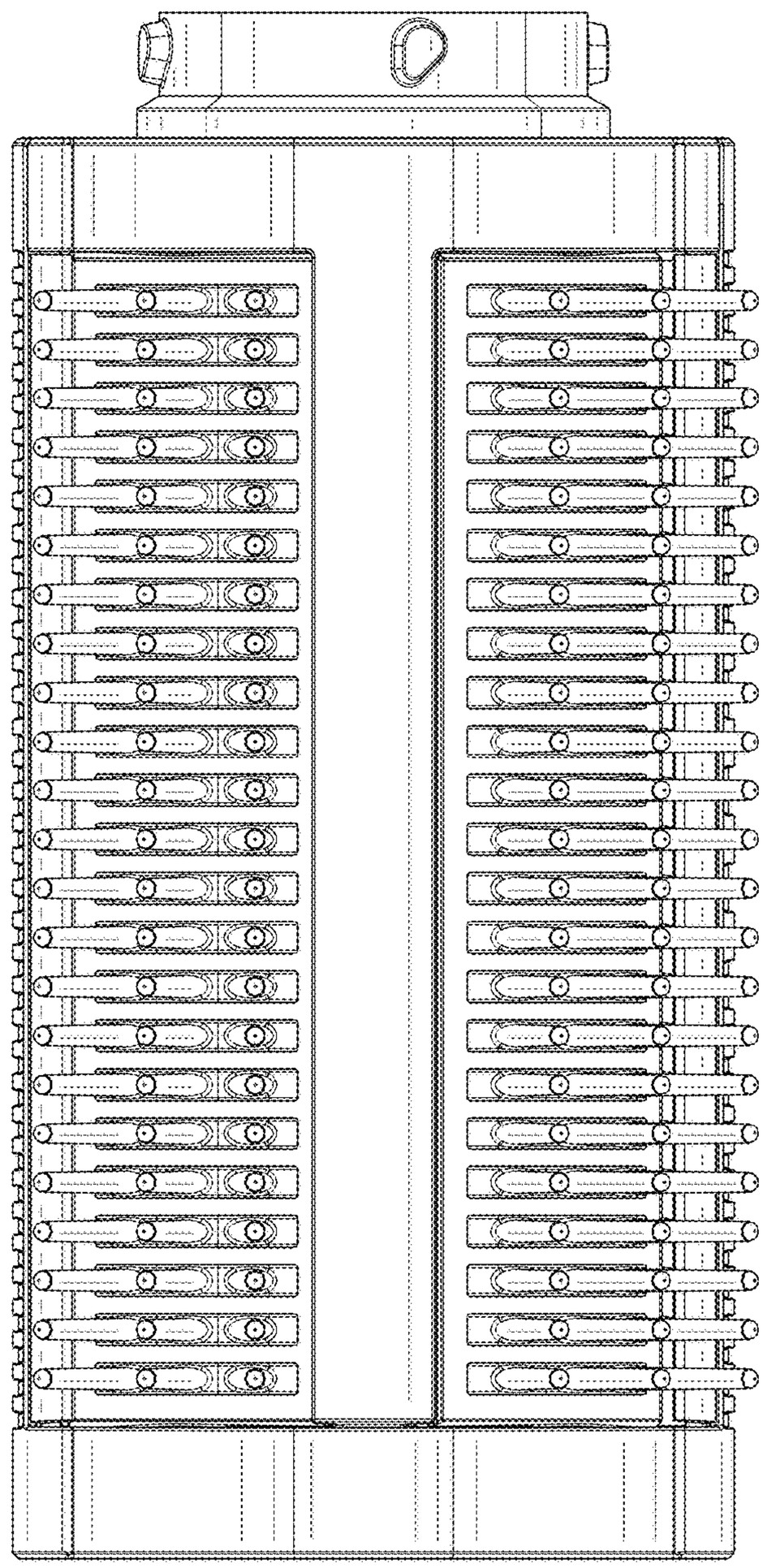

FIG. 6

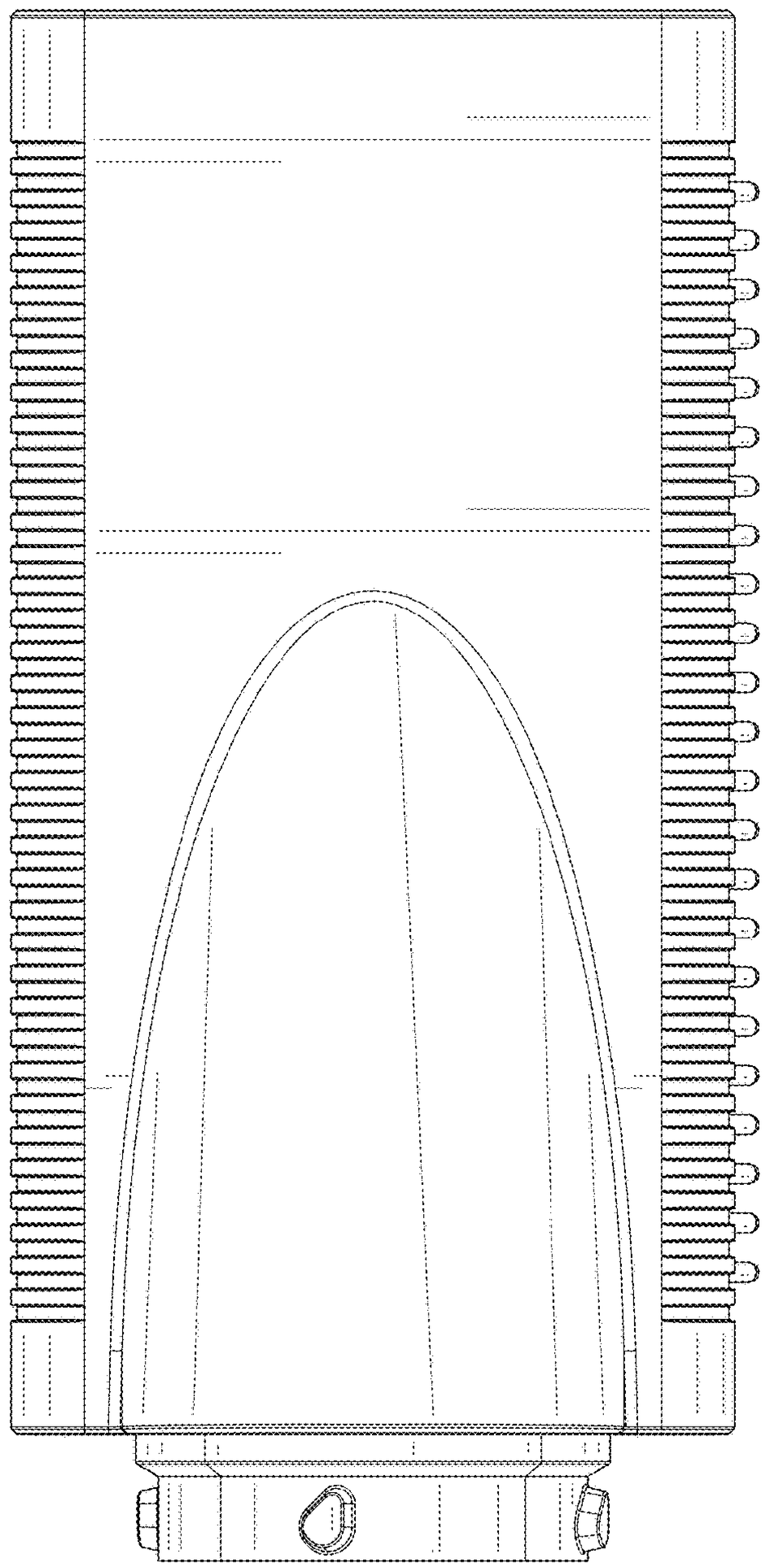

FIG. 7