US00D847415S

(12) United States Design Patent

Danesh et al.

(10) Patent No.: US D847,415 S
(45) Date of Patent: ** *Apr. 30, 2019

(54) **UNIFIED CASTING LIGHT MODULE**

(71) Applicant: **DMF, Inc.**, Carson, CA (US)

(72) Inventors: **Michael D. Danesh**, Carson, CA (US); **Dan Hero De Guzman Cajumban**, Hayward, CA (US)

(73) Assignee: **DMF, Inc.**, Carson, CA (US)

(*) Notice: This patent is subject to a terminal disclaimer.

(**) Term: **15 Years**

(21) Appl. No.: **29/663,040**

(22) Filed: **Sep. 11, 2018**

Related U.S. Application Data

(63) Continuation of application No. 14/183,424, filed on Feb. 18, 2014.

(51) **LOC (11) Cl.** **26-06**

(52) **U.S. Cl.**
USPC **D26/138**

(58) **Field of Classification Search**
USPC D26/72, 74, 76, 118, 119, 120, 121, 122, D26/138, 139, 140, 141, 142, 152
CPC F21S 2/00; F21S 4/00; F21S 4/003; F21S 4/005; F21S 4/006; F21S 4/007; F21S 4/008; F21S 6/00; F21S 8/00; F21S 8/024; F21S 8/026; F21S 8/031; F21S 8/033; F21S 8/035–8/037; F21S 8/04; F21S 8/043; F21S 8/063
See application file for complete search history.

(56) **References Cited**

U.S. PATENT DOCUMENTS

2,038,784	A	4/1936	Ghadiali
3,422,261	A	1/1969	McGinty
3,460,299	A	8/1969	Wilson
3,650,046	A	3/1972	Skinner
4,088,827	A	5/1978	Kohaut
4,154,218	A	5/1979	Hulet
4,154,219	A	5/1979	Gupta et al.
4,399,497	A	8/1983	Druffel
4,520,435	A	5/1985	Baldwin
4,601,146	A	7/1986	Wilcox
4,723,747	A	2/1988	Karp et al.
4,729,080	A	3/1988	Fremont et al.

(Continued)

FOREIGN PATENT DOCUMENTS

CA	2815067	11/2013
CN	201259125	6/2009

(Continued)

OTHER PUBLICATIONS

Non-Final Office Action dated May 16, 2018 for U.S. Appl. No. 15/132,875, 18 pages.

(Continued)

Primary Examiner — Natasha Vujcic
(74) *Attorney, Agent, or Firm* — Cooley LLP; Nathan W. Poulsen

(57) **CLAIM**

The ornamental design for a unified casting light module, as shown and described.

DESCRIPTION

FIG. **1** is a front right perspective view of the new design for a unified casting light module, the front left perspective being a reverse mirror image thereof; and,
FIG. **2** is a front view of the new design for a unified casting light module.
The portions or features of the unified casting light module not shown in the drawings form no part of the claimed design. The broken lines in the drawings form no part of the claimed design.

1 Claim, 2 Drawing Sheets

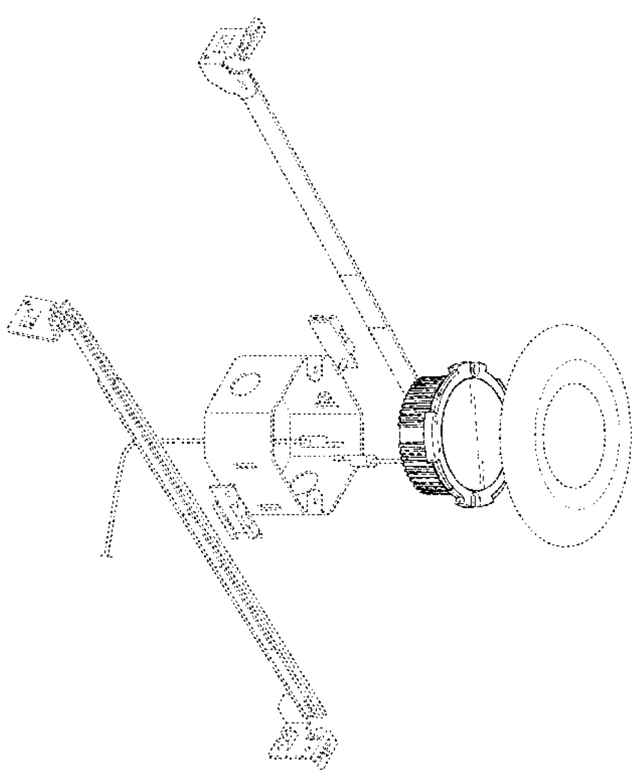

(56) **References Cited**

U.S. PATENT DOCUMENTS

4,754,377 A 6/1988 Wenman
4,930,054 A 5/1990 Krebs
5,216,203 A 6/1993 Gower
5,250,269 A 10/1993 Langer et al.
5,382,752 A 1/1995 Reyhan et al.
5,444,606 A 8/1995 Barnes et al.
5,465,199 A 11/1995 Bray et al.
5,544,870 A 8/1996 Kelly et al.
5,562,343 A 10/1996 Chan et al.
5,571,993 A 11/1996 Jones et al.
5,580,158 A 12/1996 Aubrey et al.
5,588,737 A 12/1996 Kusmer
5,603,424 A 2/1997 Bordwell et al.
D381,111 S 7/1997 Lecluze
5,662,413 A 9/1997 Akiyama et al.
D386,277 S 11/1997 Lecluze
D387,466 S 12/1997 Lecluze
5,738,436 A 4/1998 Cummings et al.
5,836,678 A 11/1998 Wright et al.
5,942,726 A 8/1999 Reiker
5,944,412 A 8/1999 Janos et al.
5,975,323 A 11/1999 Turan
6,082,878 A 7/2000 Doubek et al.
6,105,334 A 8/2000 Monson et al.
6,161,910 A 12/2000 Reisenauer et al.
6,170,685 B1 1/2001 Currier
6,174,076 B1 1/2001 Petrakis et al.
6,267,491 B1 7/2001 Parrigin
6,350,043 B1 2/2002 Gloisten
6,364,511 B1 4/2002 Cohen
D461,455 S 8/2002 Forbes
6,474,846 B1 11/2002 Kelmelis et al.
6,491,413 B1 12/2002 Benesohn
D470,970 S 2/2003 Huang
6,515,313 B1 2/2003 Ibbetson et al.
D471,657 S 3/2003 Huang
6,583,573 B2 6/2003 Bierman
6,585,389 B2 7/2003 Benazzi
6,600,175 B1 7/2003 Baretz et al.
6,657,236 B1 12/2003 Thibeault et al.
D488,583 S 4/2004 Benghozi
6,719,438 B2 4/2004 Sevack et al.
6,758,678 B2 7/2004 Chou
6,906,352 B2 6/2005 Edmond et al.
D509,314 S 9/2005 Rashidi
6,948,829 B2 9/2005 Verdes et al.
6,958,497 B2 10/2005 Emerson
6,964,501 B2 11/2005 Ryan
D516,235 S 2/2006 Rashidi
7,025,476 B2 4/2006 Leadford
D528,673 S 9/2006 Maxik et al.
D531,740 S 11/2006 Maxik
D532,532 S 11/2006 Maxik
7,148,632 B2 12/2006 Berman
7,152,985 B2 12/2006 Benitez et al.
7,181,378 B2 2/2007 Benitez et al.
7,186,008 B2 3/2007 Patti
7,190,126 B1 3/2007 Paton
7,211,833 B2 5/2007 Slater
7,213,940 B1 5/2007 Van De et al.
D547,889 S 7/2007 Huang
D553,267 S 10/2007 Yuen
7,312,474 B2 12/2007 Emerson et al.
7,320,536 B2 1/2008 Petralds et al.
D561,372 S 2/2008 Yan
D561,373 S 2/2008 Yan
7,335,920 B2 2/2008 Denbaars et al.
D570,012 S 5/2008 Huang
7,374,308 B2 5/2008 Sevack et al.
D570,504 S 6/2008 Maxik et al.
D570,505 S 6/2008 Maxik et al.
7,399,104 B2 7/2008 Rappaport
D578,677 S 10/2008 Huang
7,431,482 B1 10/2008 Morgan et al.
7,446,345 B2 11/2008 Emerson et al.
7,473,005 B2 1/2009 O'Brien
7,488,097 B2 2/2009 Reisenauer et al.
7,503,145 B2 3/2009 Newbold et al.
7,524,089 B2 4/2009 Park
D591,894 S * 5/2009 Flank D26/74
7,534,989 B2 5/2009 Suehara et al.
7,566,154 B2 7/2009 Gloisten et al.
D599,040 S 8/2009 Alexander et al.
D600,836 S 9/2009 Hanley et al.
7,588,359 B2 9/2009 Coushaine et al.
7,592,583 B2 9/2009 Page et al.
D606,696 S 12/2009 Chen
7,625,105 B1 12/2009 Johnson
7,628,513 B2 12/2009 Chiu
7,651,238 B2 1/2010 O'Brien
7,654,705 B2 2/2010 Czech et al.
D611,650 S 3/2010 Broekhoff
7,670,021 B2 3/2010 Chou
7,677,766 B2 3/2010 Boyer
7,692,182 B2 4/2010 Bergmann
7,704,763 B2 4/2010 Fujii et al.
D616,118 S 5/2010 Thomas et al.
7,722,208 B1 5/2010 Dupre et al.
7,722,227 B2 5/2010 Zhang et al.
7,748,887 B2 7/2010 Zampini, II et al.
7,766,518 B2 8/2010 Piepgras
7,769,192 B2 8/2010 Takagi et al.
7,771,082 B2 8/2010 Peng
D624,691 S * 9/2010 Zhang D26/138
D624,692 S 9/2010 Mackin et al.
D625,847 S 10/2010 Maglica
D625,876 S 10/2010 Chen et al.
D627,727 S 11/2010 Alexander et al.
7,828,465 B2 11/2010 Roberge et al.
7,871,184 B2 1/2011 Peng
D633,224 S 2/2011 Lee
D636,903 S 4/2011 Torenbeek
D637,339 S 5/2011 Hasan et al.
D637,340 S 5/2011 Hasan et al.
7,950,832 B2 5/2011 Tanaka et al.
D639,499 S 6/2011 Choi et al.
D640,819 S 6/2011 Pan
7,959,332 B2 6/2011 Ticker et al.
7,967,480 B2 6/2011 Pickard et al.
D642,317 S 7/2011 Rashidi
7,972,035 B2 7/2011 Boyer
7,972,043 B2 7/2011 Schutte
D643,970 S 8/2011 Kim et al.
D646,011 S 9/2011 Rashidi
8,038,113 B2 10/2011 Fryzek et al.
D648,476 S 11/2011 Choi et al.
D648,477 S 11/2011 Kim et al.
D650,115 S 12/2011 Kim et al.
8,070,328 B1 12/2011 Knoble et al.
8,096,670 B2 1/2012 Trott
D654,205 S 2/2012 Rashidi
D656,263 S 3/2012 Ogawa et al.
8,142,057 B2 3/2012 Roos et al.
8,152,334 B2 4/2012 Krogman
D658,788 S 5/2012 Dudik et al.
D658,802 S 5/2012 Chen
D659,862 S 5/2012 Tsai
D659,879 S 5/2012 Rashidi
D660,814 S 5/2012 Wilson
8,182,116 B2 5/2012 Zhang et al.
8,201,968 B2 6/2012 Maxik et al.
D663,058 S 7/2012 Pan
D663,466 S 7/2012 Rashidi
D664,274 S 7/2012 de Visser et al.
D664,705 S 7/2012 Kong et al.
8,215,805 B2 7/2012 Cogliano et al.
8,220,970 B1 7/2012 Khazi et al.
8,226,270 B2 7/2012 Yamamoto et al.
D667,155 S * 9/2012 Rashidi D26/74
8,262,255 B1 9/2012 Rashid
D668,372 S 10/2012 Renshaw
D668,809 S 10/2012 Rashidi
D669,198 S 10/2012 Qiu
D669,199 S 10/2012 Chuang

(56) **References Cited**

U.S. PATENT DOCUMENTS

D669,620 S 10/2012 Rashidi
8,277,090 B2 10/2012 Fryzek et al.
D671,668 S * 11/2012 Rowlette, Jr. D26/74
8,308,322 B2 11/2012 Santiago et al.
D672,899 S * 12/2012 Van De Ven D26/74
D673,869 S 1/2013 Yu
8,376,593 B2 2/2013 Bazydola et al.
D677,417 S 3/2013 Rashidi
D679,044 S * 3/2013 Jeswani D26/74
D679,047 S 3/2013 Tickner et al.
8,403,533 B1 3/2013 Paulsel
8,403,541 B1 3/2013 Rashidi
D681,259 S 4/2013 Kong
8,408,759 B1 4/2013 Rashidi
D682,459 S 5/2013 Gordin
D683,063 S 5/2013 Lopez et al.
D683,890 S 6/2013 Lopez et al.
D684,269 S 6/2013 Wang et al.
D684,287 S * 6/2013 Rashidi D26/74
D684,719 S 6/2013 Rashidi
D685,118 S 6/2013 Rashidi
D685,120 S 6/2013 Rashidi
8,454,204 B1 6/2013 Chang et al.
D685,507 S 7/2013 Sun
D687,586 S 8/2013 Rashidi
D687,587 S * 8/2013 Rashidi D26/74
D687,588 S * 8/2013 Rashidi D26/74
D687,980 S 8/2013 Gravely et al.
D688,405 S 8/2013 Kim et al.
D690,049 S 9/2013 Rashidi
D690,864 S 10/2013 Rashidi
D690,865 S 10/2013 Rashidi
D690,866 S * 10/2013 Rashidi D26/74
D691,314 S 10/2013 Rashidi
D691,315 S 10/2013 Samson
D691,763 S 10/2013 Hand et al.
8,550,669 B2 10/2013 Macwan et al.
D693,043 S 11/2013 Schmalfuss et al.
D693,517 S 11/2013 Davis
D694,456 S 11/2013 Rowlette, Jr. et al.
D695,441 S 12/2013 Lui et al.
D695,941 S * 12/2013 Rashidi D26/74
D696,446 S 12/2013 Huh
D696,447 S 12/2013 Huh
D696,448 S 12/2013 Huh
8,602,601 B2 12/2013 Khazi et al.
D698,067 S 1/2014 Rashidi
D698,068 S 1/2014 Rashidi
D698,985 S 2/2014 Lopez et al.
D699,384 S 2/2014 Rashidi
D700,387 S 2/2014 Snell
8,641,243 B1 2/2014 Rashidi
8,659,034 B2 2/2014 Baretz et al.
D701,466 S 3/2014 Clifford et al.
8,672,518 B2 3/2014 Boomgaarden et al.
D702,867 S 4/2014 Kim et al.
D703,843 S 4/2014 Cheng
8,684,569 B2 4/2014 Pickard et al.
D705,472 S 5/2014 Huh
8,727,582 B2 5/2014 Brown et al.
D708,381 S 7/2014 Rashidi
D710,529 S 8/2014 Lopez et al.
8,801,217 B2 8/2014 Oehle et al.
D714,989 S 10/2014 Rowlette, Jr. et al.
8,870,426 B2 10/2014 Biebl et al.
8,888,332 B2 11/2014 Martis et al.
8,890,414 B2 11/2014 Rowlette, Jr. et al.
D721,845 S 1/2015 Lui et al.
D722,296 S 2/2015 Taylor
D722,978 S 2/2015 Hagarty
8,950,898 B2 2/2015 Catalano
D723,781 S 3/2015 Miner
D723,783 S 3/2015 Miner
D725,359 S 3/2015 Miner
D726,363 S * 4/2015 Danesh D26/138
D726,949 S 4/2015 Redfern
9,039,254 B2 5/2015 Danesh
D731,689 S 6/2015 Bernard et al.
9,062,866 B1 6/2015 Christ et al.
9,068,719 B2 6/2015 Van De Ven et al.
D734,525 S 7/2015 Gordin
D735,142 S 7/2015 Hagarty
9,078,299 B2 7/2015 Ashdown
D735,933 S * 8/2015 Campagna D26/142
9,109,760 B2 8/2015 Shum et al.
D739,590 S 9/2015 Redfern
9,140,441 B2 9/2015 Goelz et al.
9,151,457 B2 10/2015 Pickard et al.
9,151,477 B2 10/2015 Pickard et al.
D744,723 S 12/2015 Yoo
9,217,560 B2 12/2015 Harbers
9,222,661 B2 12/2015 Kim
9,285,103 B2 3/2016 Van De Ven et al.
9,291,319 B2 3/2016 Kathawate et al.
9,301,362 B2 3/2016 Dohn et al.
9,310,038 B2 4/2016 Athalye
9,310,052 B1 4/2016 Shum
9,347,655 B2 5/2016 Boomgaarden et al.
9,360,190 B1 6/2016 Shum et al.
9,371,966 B2 6/2016 Rowlette, Jr.
D762,181 S 7/2016 Lin
D762,906 S 8/2016 Jeswani et al.
D764,079 S 8/2016 Wu
9,404,639 B2 8/2016 Bailey et al.
9,417,506 B1 8/2016 Tirosh
D766,185 S 9/2016 Hagarty
D768,325 S 10/2016 Xu
D768,326 S 10/2016 Guzzini
D769,501 S 10/2016 Jeswani et al.
D770,065 S 10/2016 Tittle
9,476,552 B2 10/2016 Myers et al.
9,488,324 B2 11/2016 Shum et al.
D776,324 S 1/2017 Gierl et al.
D777,967 S 1/2017 Redfern
9,534,751 B2 1/2017 Maglica et al.
D778,241 S 2/2017 Holbrook et al.
D778,484 S 2/2017 Guzzini
D779,100 S 2/2017 Redfern
9,581,302 B2 2/2017 Danesh
9,599,315 B1 3/2017 Harpenau et al.
9,605,910 B2 3/2017 Swedberg et al.
D785,228 S 4/2017 Guzzini
D786,472 S 5/2017 Redfern
D786,474 S 5/2017 Fujisawa
D790,102 S 6/2017 Guzzini
9,673,597 B2 6/2017 Lee
9,702,516 B1 7/2017 Vasquez et al.
D799,105 S * 10/2017 Eder D26/138
D800,957 S * 10/2017 Eder D26/138
9,791,111 B1 10/2017 Huang et al.
9,803,839 B2 10/2017 Visser et al.
D809,176 S 1/2018 Partington
9,860,961 B2 1/2018 Chemel
9,954,266 B2 5/2018 Danesh
9,964,266 B2 * 5/2018 Danesh F21S 8/02
D820,494 S 6/2018 Cohen
D821,615 S 6/2018 Trice
D821,627 S 6/2018 Ko
D822,505 S 7/2018 Gibson et al.
D825,829 S * 8/2018 Guo D26/138
2002/0172047 A1 11/2002 Ashley
2005/0225966 A1 10/2005 Hartmann et al.
2005/0227536 A1 10/2005 Gamache et al.
2005/0237746 A1 10/2005 Yiu
2006/0158873 A1 7/2006 Newbold et al.
2006/0215408 A1 9/2006 Lee
2007/0035951 A1 2/2007 Tseng
2007/0185675 A1 8/2007 Papamichael et al.
2007/0206374 A1 9/2007 Petrakis et al.
2008/0019138 A1 1/2008 Otte et al.
2008/0112168 A1 5/2008 Pickard et al.
2008/0112170 A1 5/2008 Troll
2008/0112171 A1 5/2008 Patti et al.
2008/0130308 A1 5/2008 Behr

(56) **References Cited**

U.S. PATENT DOCUMENTS

2008/0137347	A1	6/2008	Trott et al.
2008/0165545	A1	7/2008	O'Brien
2008/0232116	A1	9/2008	Kim
2009/0003009	A1	1/2009	Tessnow et al.
2009/0034261	A1	2/2009	Grove
2009/0080189	A1	3/2009	Wegner
2009/0135613	A1	5/2009	Peng
2009/0141500	A1	6/2009	Peng
2009/0141506	A1	6/2009	Lan
2009/0141508	A1	6/2009	Peng
2009/0147517	A1	6/2009	Li
2009/0161356	A1	6/2009	Negley et al.
2009/0237924	A1	9/2009	Ladewig
2009/0280695	A1	11/2009	Sekela et al.
2010/0002320	A1	1/2010	Minano et al.
2010/0014282	A1	1/2010	Danesh
2010/0061108	A1	3/2010	Zhang et al.
2010/0110690	A1	5/2010	Hsu et al.
2010/0110698	A1	5/2010	Harwood et al.
2010/0148673	A1	6/2010	Stewart et al.
2010/0149822	A1	6/2010	Cogliano et al.
2010/0244709	A1	9/2010	Steiner et al.
2010/0245172	A1	9/2010	Liu
2010/0259919	A1	10/2010	Khazi et al.
2010/0270903	A1	10/2010	Jao et al.
2010/0302778	A1	12/2010	Dabiet et al.
2011/0063831	A1	3/2011	Cook
2011/0068687	A1	3/2011	Takahasi et al.
2011/0069499	A1	3/2011	Trott et al.
2011/0116276	A1	5/2011	Okamura et al.
2011/0134634	A1	6/2011	Gingrich, III et al.
2011/0134651	A1	6/2011	Berman
2011/0170294	A1	7/2011	Mier-Langner et al.
2011/0194299	A1	8/2011	Crooks et al.
2011/0216534	A1	9/2011	Tickner et al.
2011/0226919	A1	9/2011	Fryzek et al.
2011/0255292	A1	10/2011	Shen
2011/0267828	A1	11/2011	Bazydola et al.
2012/0020104	A1	1/2012	Biebl et al.
2012/0074852	A1	3/2012	Delnoij
2012/0106176	A1	5/2012	Lopez et al.
2012/0113642	A1	5/2012	Catalano
2012/0140442	A1	6/2012	Woo et al.
2012/0162994	A1	6/2012	Wasniewski et al.
2012/0182744	A1	7/2012	Santiago et al.
2012/0188762	A1	7/2012	Joung et al.
2012/0287625	A1	11/2012	Macwan et al.
2013/0009552	A1	1/2013	Page
2013/0010476	A1	1/2013	Pickard et al.
2013/0051012	A1	2/2013	Oehle et al.
2013/0141913	A1	6/2013	Sachsenweger
2013/0163254	A1	6/2013	Chang et al.
2013/0170233	A1	7/2013	Nezu et al.
2013/0258677	A1	10/2013	Fryzek et al.
2013/0294084	A1	11/2013	Kathawate et al.
2013/0322062	A1	12/2013	Danesh
2013/0335980	A1	12/2013	Nakasuji
2014/0049957	A1	2/2014	Goelz et al.
2014/0063818	A1	3/2014	Randolph et al.
2014/0140490	A1	5/2014	Roberts et al.
2014/0254177	A1	9/2014	Danesh
2014/0347848	A1	11/2014	Pisavadia et al.
2015/0009676	A1	1/2015	Danesh
2015/0138779	A1	5/2015	Livesay et al.
2015/0184837	A1	7/2015	Zhang et al.
2015/0198324	A1	7/2015	O'Brien et al.
2015/0233556	A1	8/2015	Danesh
2015/0263497	A1	9/2015	Korcz et al.
2015/0276165	A1	10/2015	Bailey et al.
2015/0362159	A1	12/2015	Ludyjan
2016/0312987	A1	10/2016	Danesh
2016/0348860	A1	12/2016	Bailey et al.
2016/0348861	A1	12/2016	Bailey et al.
2016/0366738	A1	12/2016	Boulanger et al.
2017/0005460	A1	1/2017	Lee
2017/0045213	A1	2/2017	Williams et al.
2017/0138576	A1*	5/2017	Peng F21S 8/02
2017/0307188	A1	10/2017	Oudina et al.

FOREIGN PATENT DOCUMENTS

CN	201259125	Y	6/2009
CN	101608781	A	12/2009
CN	201636626	U	11/2010
CN	202392473	U	11/2011
CN	103307518	A	3/2012
CN	202733693	U	2/2013
CN	103322476	A	9/2013
CN	203215483	U	9/2013
CN	20327663	U	11/2013
CN	101498411	B	11/2013
CN	104854142	A	11/2013
CN	203297980	U	11/2013
CN	103712135	B	12/2013
CN	203628464	U	12/2013
CN	203641919	U	8/2014
CN	204513161	U	7/2015
CN	204611541	U	9/2015
CN	204829578	U	12/2015
CN	205606362	U	9/2016
CN	2016130742	U	4/2017
CN	103154606	B	5/2017
DE	9109828	U1	2/1992
EP	1 672 155	A1	6/2006
EP	2 095 938	A1	2/2008
EP	2 306 072	A1	4/2011
EP	2 453 169	A2	5/2012
EP	2 193 309	B1	7/2012
GB	2509772	A	7/2014
JP	2007265961		10/2007
JP	2011060450	A2	3/2011
JP	2012064551	A2	3/2012
JP	2015002027	A2	6/2013
JP	2015002028	A2	1/2015
JP	20171076699	A2	6/2017
KR	1020110008796	A	1/2011
KR	1020120061625	A	6/2012
WO	WO 2013/128896	A1	9/2013
WO	WO 2015/000212	A1	1/2015
WO	WO 2016152166	A2	8/2016

OTHER PUBLICATIONS

Notice of Allowance dated May 10, 2018 from U.S. Appl. No. 14/726,064, 7 pages.

Acrich COB Zhaga Module, Product Description, Seoul Semiconductor Nov. 2016, 39 pages.

<https://www.zhagastandard.org/books/book18/>, Mar. 2017, 5 pages.

Notice of Allowance dated Mar. 26, 2018 for U.S. Appl. No. 14/184,601, 10 pages.

2006 International Building Code, Section 712 Penetrations, 2006, 4 pages.

BXUV.GuideInfo, Fire Resistance Ratings—ANSI/UL 263, UL Online Certifications Directory, last updated Nov. 3, 2016, 27 pages.

CEYY.GuideInfo, Outlet Boxes and Fittings Certified for Fire Resistance, UL Online Certifications Directory, last updated May 16, 2013, 2 pages.

Canadian Office Acton dated Dec. 23, 2013 from Canadian Application No. 2,778,581, 3 pages.

Canadian Office Action dated Mar. 22. 2016 from Canadian Application No. 2,879,629, 4 pages.

Canadian Office Action dated Dec. 6, 2016 from Canadian Application No. 2,879,629, 3 pages.

Canadian Office Acton dated Mar. 9, 2017 from Canadian Application No. 2,931,588, 5 pages.

Canadian Office Action dated Feb. 1, 2016 from Canadian Application No. 2,879,486, 5 pages.

Canadian Office Action dated Jun. 12, 2017 from Canadian Application No. 2,927,601, 4 pages.

(56) **References Cited**

OTHER PUBLICATIONS

Canadian Office Action dated Aug. 11, 2017 from Canadian Application No. 2,941,051, 4 pages.
DME Series Installation Instructions, Oct. 18, 2011, 2 pages.
DMF, Inc., "dmfLIGHTING: LED Recessed Lighting Solutions," Info sheets, Mar. 19, 2012, 4 pages.
DMF, Inc., "dmfLIGHTING: LED Recessed Downlighting," DRD2 Product Brochure, Oct. 23, 2014, 50 pages.
DMF, Inc., "dmfLIGHTING: LED Recessed Downlighting," Product Catalog, Aug. 2012, 68 pages.
Final Office Action dated Apr. 27, 2016 from U.S. Appl. No. 14/184,601, 19 pages.
Final Office Action dated Jul. 26, 2017 from U.S. Appl. No. 14/184,601, 18 pages.
Final Office Action dated Jan. 29, 2016 from U.S Appl. No. 14/183,424 21 pages.
Final Office Action dated Jun. 23, 2016 from U.S. Appl. No. 13/484,901, 18 pages.
Final Office Action dated Apr. 2, 2010 from U.S Appl. No. 13/484,901, 13 pages.
Halo, Halo LED H4 H7 Collection, SustainabLEDesign, Cooper Lighting, (emphasis on p. 18 "H7 Collection LED Modules—Halo LED H7 Module Features,") Mar. 28, 2012, 52 pages.
Halo, H7 LED Downlight Trims 49x Series, 6-inch LED Trims for Use with MI7x LED Modules, Cooper Lighting, ADV110422, rev. Aug. 12, 2011, 15 pages.
Halo, LED Module ML706x, Cooper Lighting, General Installation for All Modules/p. 1; Tether Installation/pp. 2-3, Installation into HALO H750x Series LED—only (Non-Screw Based), Recessed Fixture, p. 4, Oct. 20, 20019, 4 pages.
"Membrane Penetrations in Fire-Resistance Rated Walls," https://www.ul.com/wp-content/uploads/2014/04/ul_MembranePenetrations.pdf, Issue 1, 2009, 2 pages.
"Metallic Outlet Boxes," UL 514A, Underwriters Laboratories, Inc., Feb. 16, 2004 (Title Page Reprinted Aug. 10, 2007), 106 pages.
"Metallic and Non-metallic Outlet Boxes Used in Fire-rated Assembly," https://iaeimagazine.org/magazine/2000/09/16/metallic-and-non-metallic-outlet-boxes-used-in-fire-rated-assembly/, Sep. 16, 2000, 5 pages.
Non-Final Office Action dated Mar. 15, 2010 from U.S. Appl. No. 12/100,148, 8 pages.
Non-Final Office Acton dated Apr. 30, 2010 from U.S. Appl. No. 12/173,232, 13 pages.
Non-Final Office Action dated Sep. 5, 2014 from U.S. Appl. No. 13/791,087, 8 pages.
Non-Final Office Action dated Jul. 20, 2015 from U.S. Appl. No. 14/184,601, 16 pages.
Non-Final Office Action dated Dec. 15, 2016 from U.S. Appl. No. 14/184,601, 18 pages.
Non-Final Office Action dated Feb. 6, 2018 from U.S. Appl. No. 15/167,682, 9 pages.
Non-Final Office Action dated Sep. 15, 2015 from U.S. Appl. No. 13/484,901, 16 pages.
Non-Final Office dated Oct. 16, 2014 from U.S. Appl. No. 13/484,901, 11 pages.
Non-Final Office Action dated Sep. 6, 2017 from U.S. Appl. No. 14/726,064, 8 pages.
Non-Final Office Acton dated May 17, 2017 from U.S. Appl. No. 14/183,424, 20 pages.
Non-Final Office Action dated Jun. 2, 2015 from U.S. Appl. No. 14/183,424, 20 pages.
Notice of Allowance dated Jan. 30, 2015 from U.S. Appl. No. 13/791,087, 9 pages.
Notice of Allowance dated Jan. 6, 2015 from U.S. Appl. No. 29/467,026, 9 pages.
Notice of Allowance dated Oct. 21, 2016 from U.S. Appl. No. 13/484,901, 7 pages.
Notice of Allowance dated Mar. 24, 2016 from U.S. Appl. No. 14/247,149, 8 pages.
Notice of Allowance dated Aug. 23, 2017 from Canadian Application No. 2,879,629, 1 page.
"Outlet Boxes for Use in Fire Rated Assemblies," https://www.com/wp-content/uploads/2014/04/UI_outletboxes.pdf, 2011, 2 pages.
David's Bridal, Inc. v. *Jenny Yoo Collections, Inc.*, PGR2016-00041 (PTAB 2017), U.S. Pat. No. D. 744,723; Decision Denying Institution of Post-Grant Review Entered Feb. 22, 2017.
Appeal 2016-007893 (2017 PTAB) for U.S. Appl. No. 29/465,550, now U.S. Pat. No. D. 822,505, Board Decision—Examiner Reversed; Decision reversing rejection under 35 USC 112, Oct. 2, 2017.
Skechers USA, Inc., v. *Nike, Inc.*, IPR2016-00871 (PTAB 2016), U.S. Pat. No. D. 725,359; Decision Denying Institution of Inter Partes Review, Sep. 29, 2016.
Skechers v. *Nike.*, No. 2017-00621, Final Written Decision; Jun. 28, 2018.
Skechers v. *Nike*, No. 2017-00620, Final Written Decision; Jun. 28, 2018.
DRD2 LED Recessed Downlighting DMF Light Catalog Oct. 23, 2014.
Dmf DRD2 Recessed LED Downlight General Retrofit Junction Box Dated: Dec. 18, 2015 Downloaded Jul. 28, 2018, from https://www.a Iconlighting.com/specsheets/DMF/DRD2-Junction-Box-Retrofit-Spec-Sheet .pdf.
Dmf DRD2 Recessed LED Downlight General New Construction 4", 5", 6" Aperture Dated: Aug. 31, 2016 Downloaded Jul. 28, 2018, from https://www. cansandfans.com/sites/default/files/DRD2-General-New-Construction-Spec-Sheet_7_0 .pdf.
Mar. 5, 2016—The DMF Lighting DRD2 Recessed LED Downlight General Retrofit Junction Box—Wet Location Rated is the ideal solution for Commercial LED recessed lighting retrofit applications. web cache https://ww w.alconlighting.com/dmf-drd2m.html (downloaded Jul. 28, 2018).
DRD2 Recessed LED Downlight General New Construction 4", 5", 6" Aperture Product Specifications Dated: Jun. 15, 2016.
Non-Final Office Action dated Jul. 24, 2018 for U.S. Appl. No. 29/638,259.
Non-Final Office Action dated Apr. 12, 2018 for U.S. Appl. No. 29/638,259.
The Imtra Marine Lighting 2012 Catalog downloaded from the Internet Archive at: https://web.archive.org/web/20120617141635/http://www.imtra.com:80/COLLATERAL/DOCUMENTS/ENGLISH-US/PRODUCTS/IML_BROCHURE.PDF, downloaded Oct. 9, 2018, 40 pages.
Imtra Portland Bi-Color LED downloaded from the Internet Archive at: https://web.archive.org/web/20130125092712/http://www.imtra.com:80/0ade25fb-3218-4cae-a926-6abe64ffd93a/lighting-light-fixtures-downlights-3-to-4-inches-detail.htm, 2012, downloaded Oct. 9, 2018, 1 page.
CREE LMH2 LED Module downloaded from the Internet Archive at: https://web.archive.org/web/20120909164757/www.mouser.com/new/cree/creelmh2, 1996-2012, downloaded Oct. 9, 2018, 2 pages.
CREE LMH2 LED Module Data Sheet; "LED modules advance in performance, standardization questions persist," downloaded from the Internet Archive at: https://web.archive.org/web/20120111020942/http://www.cree.com/products/pdf/LEDModules_LMH2.pdf, Oct. 29, 2013, downloaded Oct. 9, 2018, 9 pages.
CREE LMH2 LED Design Guide downloaded from the Internet Archives at: http://web.archive.org/web/20131102045753/http:/www.cree.com:80/~/media/Files/Cree/LED%20Components%20and%20Modules/Modules/Design%20Files%20LMH2/LEDmodules_LMH2 DG.pdf, 2011-2013, 20 pages.
Mini LED Puck Light from Elco Lighting, model No. E247W, E247B, E247N, E247BZ downloaded from the Internet Archives at: https://elcolighting.com/printpdf/products/undercabinet-pucks-xyris%E2%84%A2-mini-led-puck-light, 2018, 1 page.
LED Undercabinet Pocket Guide, "Drivers for LED Puck Lights", LED Undercabinet Pocket Guide, downloaded from the Internet Archives at: https://elcolighting.com/sites/default/files/catalog-elpcat1045-undercabinet.pdf, 12 pages.
Versi LED Mini Flush Installation Instructions downloaded from the Internet Archives at: http://sunoptics.acuitybrands.com/products/

(56) **References Cited**

OTHER PUBLICATIONS

detail/174967/lithonia-lighting/led-versi-lite/decorative-indoor-flush-mount/-/media/products/lithonia_lighting/174967/document/u990636-rev-a-_pdf.pdf, 2 pages.
Bortz, J. C. et al., "Optimal design of a nonimaging TIR doublet lens for an illumination system using an LED source", Proc. SPIE 5529, Nonimaging Optics and Efficient Illumination Systems, (Sep. 29, 2004); doi: 10.1117/12.562598; https://doi.org/10.1117/12.562598, 10 pages.
Dross, O. et al., "Review of SMS design methods and real-world applications", Proc. SPIE 5529, Nonimaging Optics and Efficient Illumination Systems, (Sep. 29, 2004); doi: 10.1117/12.561336; https://doi.org/10.1117/12.561336, 14 pages.
Medvedev, V. et al., "Uniform LED illuminator for miniature displays," Proc. SPIE 3428, Illumination and Source Engineering, (Oct. 20, 1998); doi: 10.1117/12.327957;https://doi.org/10.1117/12.327957, 13 pages.
Notice of Allowance dated May 22, 2018 from U.S. Appl. No. 14/183,424, 9 pages.
Parkyn, W. A. et al., "New TIR lens applications for light-emitting diodes", Proc. SPIE 3139, Nonimaging Optics: Maximum Efficiency Light Transfer IV, (Oct. 3, 1997); doi: 10.1117/12.290217, 7 pages.
Schreiber, P. et al., "Microoptics for homogeneous LED-illumination", Proc. SPIE 6196, Photonics in Multimedia, 61960P (Apr. 21, 2006); doi: 10.1117/12.663084; https://doi.org/10.1117/12.663084, 11 pages.
Van Giel, B. V. et al., "Design of axisymmetrical tailored concentrators for LED light source applications", Proc. SPIE 6196, Photonics in Multimedia, 619603 (Apr. 21, 2006); doi: 10.1117/12.660115; https://doi.org/10.1117/12.660115, 11 page.
Zhen, Y. et al., "The optimal design of TIR lens for improving LED illumination uniformity and efficiency", Proc. SPIE 6834, Optical Design and Testing III, 68342K (Nov. 28, 2007); doi: 10.1117/12.756101, 9 pages.
Zou, H. et al., "58.1: Single-Panel LCOS Color Projector with LED Light Sources", SID Symposium, vol. 36, Issue 1, 4 pages (May 2005).
U.S. Appl. No. 15/637,742, filed Jun. 29, 2017, Kopitzke, IV.
U.S. Appl. No. 15/688,266, filed Aug. 28, 2017, Gaskarimahalle.
U.S. Appl. No. 15/853,400, filed Dec. 22, 2017, Kashani.
U.S. Appl. No. 15/901,738, filed Feb. 21, 2018, Danesh.
U.S. Appl. No. 15/947,065, filed Apr. 6, 2018, Danesh.
U.S. Appl. No. 29/638,259, filed Feb. 26, 2018, Danesh.
U.S. Appl. No. 29/541,565, filed Oct. 5, 2015, Peng.
U.S. Appl. No. 29/645,941, filed Apr. 30, 2018, Danesh et al.
U.S. Appl. No. 29/653,142, filed Jun. 11, 2018, Danesh et al.
U.S. Appl. No. 29/663,037, filed Sep. 11, 2018, Danesh et al.

* cited by examiner

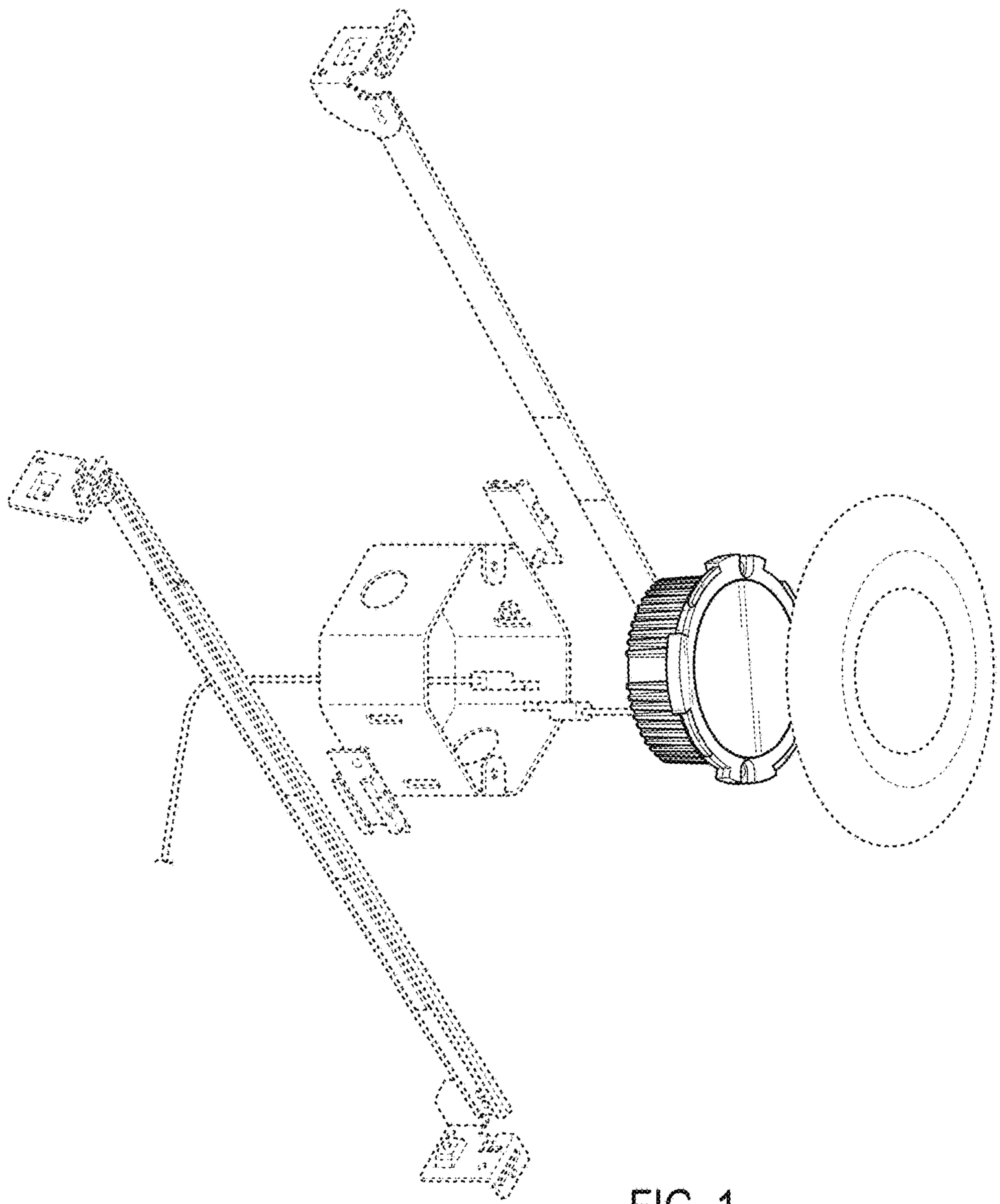

FIG. 1

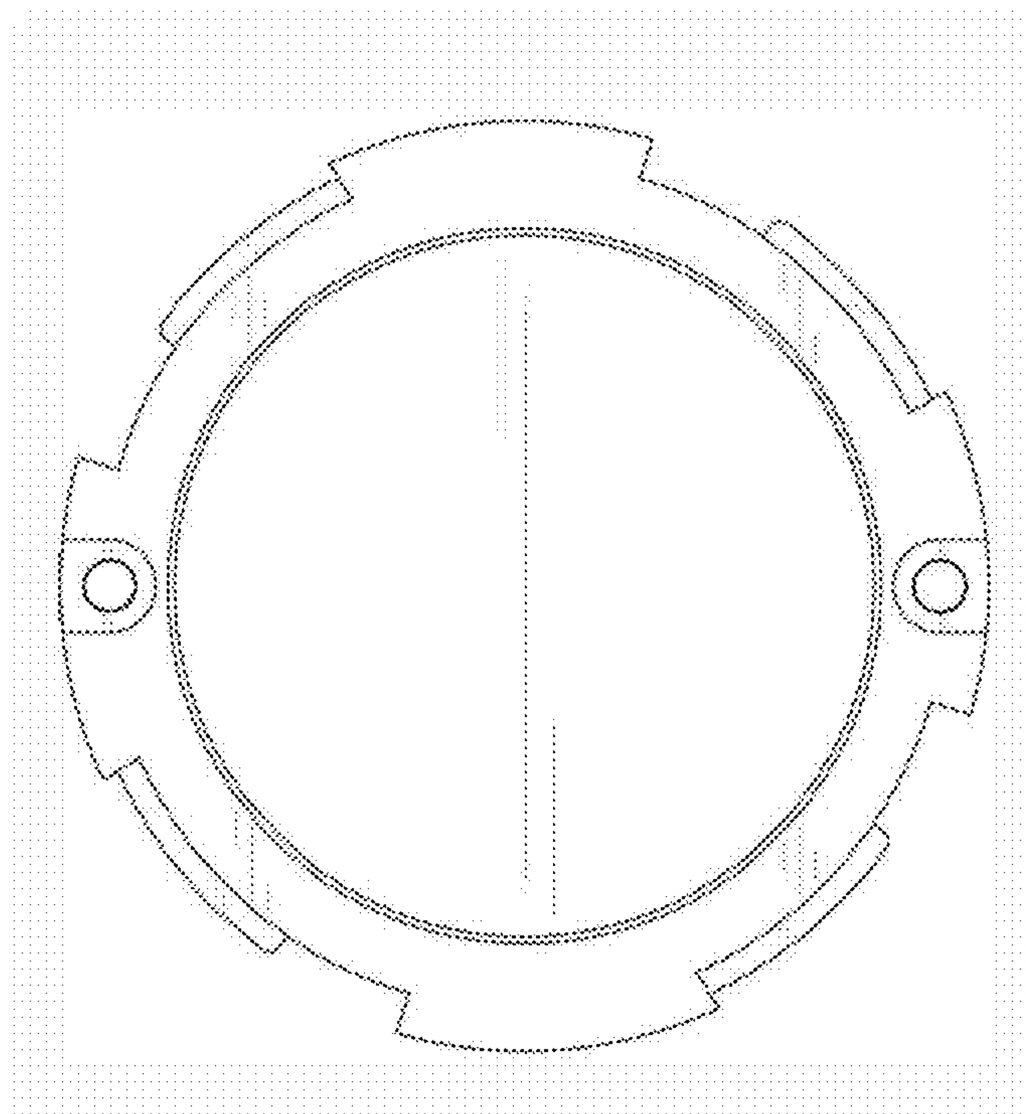

FIG. 2