US00D845102S

(12) United States Design Patent

Hofer

(10) Patent No.: US D845,102 S
(45) Date of Patent: ** Apr. 9, 2019

(54) **SCREWDRIVER**

(71) Applicant: **Hofer Hofer Ltd.**, Kitchener (CA)

(72) Inventor: **Joseph Hofer**, Kitchener (CA)

(73) Assignee: **Hofer Hofer Ltd.**, Kitchener (CA)

(**) Term: **15 Years**

(21) Appl. No.: **29/611,421**

(22) Filed: **Jul. 21, 2017**

(51) **LOC (11) Cl.** **08-04**

(52) **U.S. Cl.**
USPC **D8/85**

(58) **Field of Classification Search**
USPC D8/82, 83, 84, 85, 86, 87, 105, 107, 300
CPC B25G 1/08; B25G 1/085; B25B 15/00; B25B 15/02; B25B 15/04; B25B 15/06
See application file for complete search history.

(56) **References Cited**

U.S. PATENT DOCUMENTS

5,437,212 A * 8/1995 Thompson B25B 13/463 81/63.1
D421,888 S * 3/2000 Thompson D8/83
D442,050 S * 5/2001 Hung D8/107
6,543,315 B2 * 4/2003 Huang B25B 13/463 192/43.2
7,051,626 B1 * 5/2006 Chen B25G 1/085 403/290
7,182,002 B2 * 2/2007 Hu B25G 1/08 7/165
7,281,455 B2 * 10/2007 Hu B25G 1/085 81/177.4
D573,862 S * 7/2008 Kao D8/83
D622,206 S * 8/2010 Gall D12/345
7,950,311 B2 * 5/2011 Chen B25G 1/085 81/177.4
D672,953 S * 12/2012 Lin D3/274
8,833,214 B2 * 9/2014 Wang B25G 1/085 81/177.4
9,174,334 B2 * 11/2015 Chen B25B 15/02
D797,539 S * 9/2017 Lipscomb D8/99
D819,417 S * 6/2018 Graykowski D8/47

* cited by examiner

Primary Examiner — Philip S Hyder
(74) *Attorney, Agent, or Firm* — Own Innovation; James W. Hinton

(57) **CLAIM**

The ornamental design for a screwdriver, as shown and described.

DESCRIPTION

FIG. **1** is a perspective view of a screwdriver made in accordance with the subject design;
FIG. **2** is a front perspective view thereof
FIG. **3** is a rear perspective view thereof;
FIG. **4** is a front elevation view thereof;
FIG. **5** is a left side elevation view thereof;
FIG. **6** is a rear elevation view thereof;
FIG. **7** is a top view thereof;
FIG. **8** is a bottom view thereof;
FIG. **9** is a front perspective view thereof with an end cap removed;
FIG. **10** is a rear perspective view thereof with the end cap removed; and,
FIG. **11** is a rear perspective view with an end cap removed in a variant thereof.
The broken lines showing the remainder of the screwdriver are included for environmental purposes only and form no part of the claimed design.

1 Claim, 4 Drawing Sheets

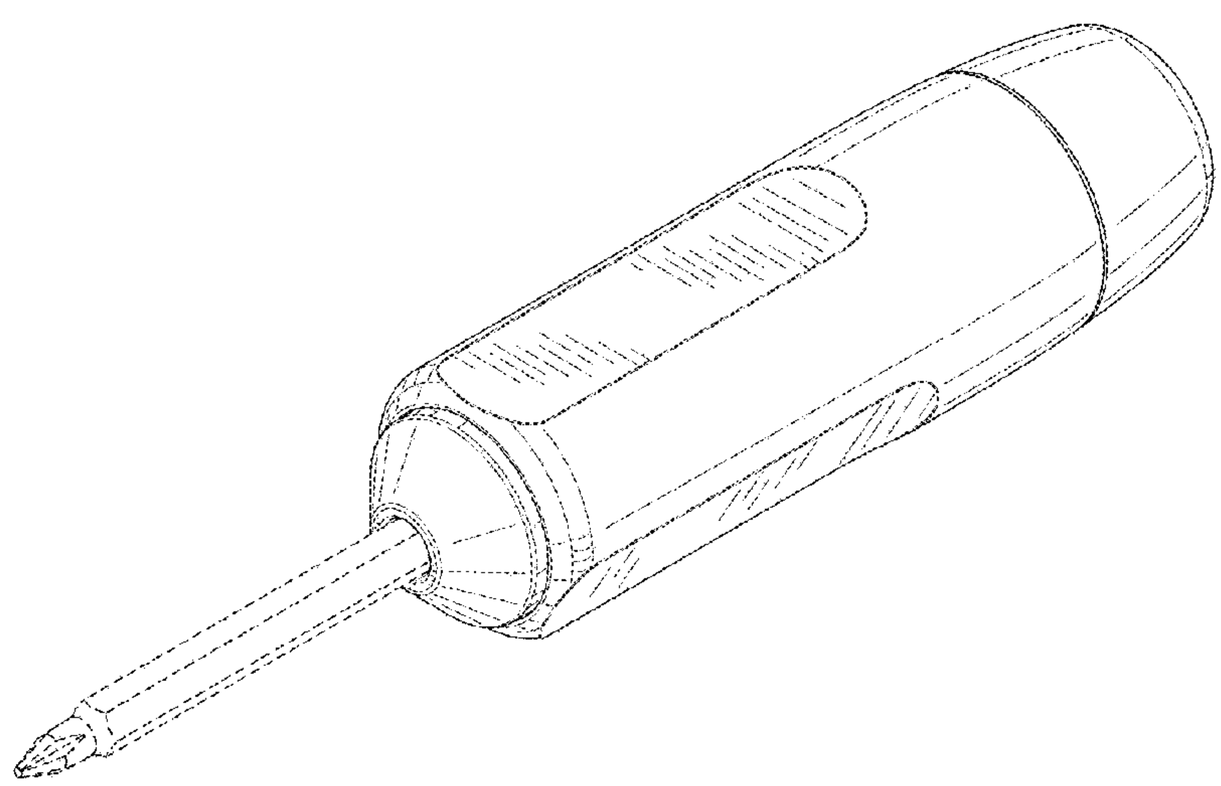

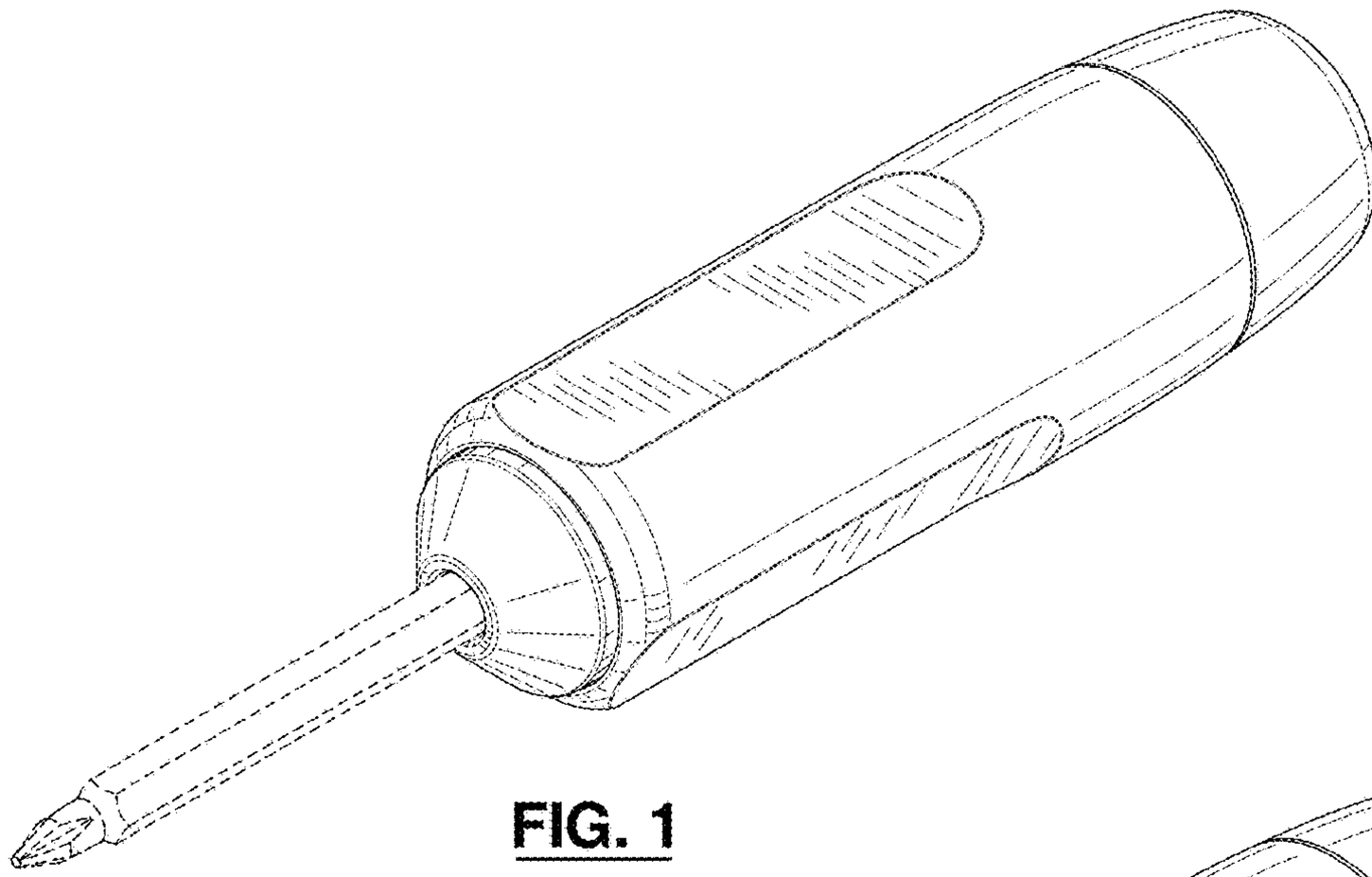

FIG. 1

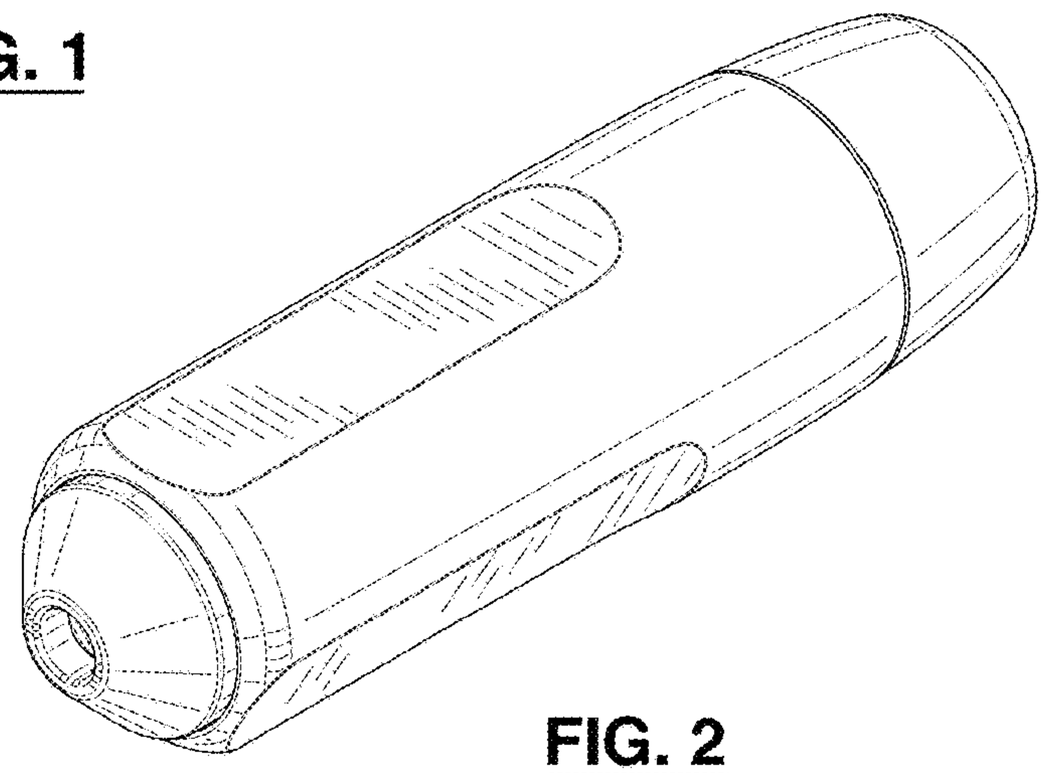

FIG. 2

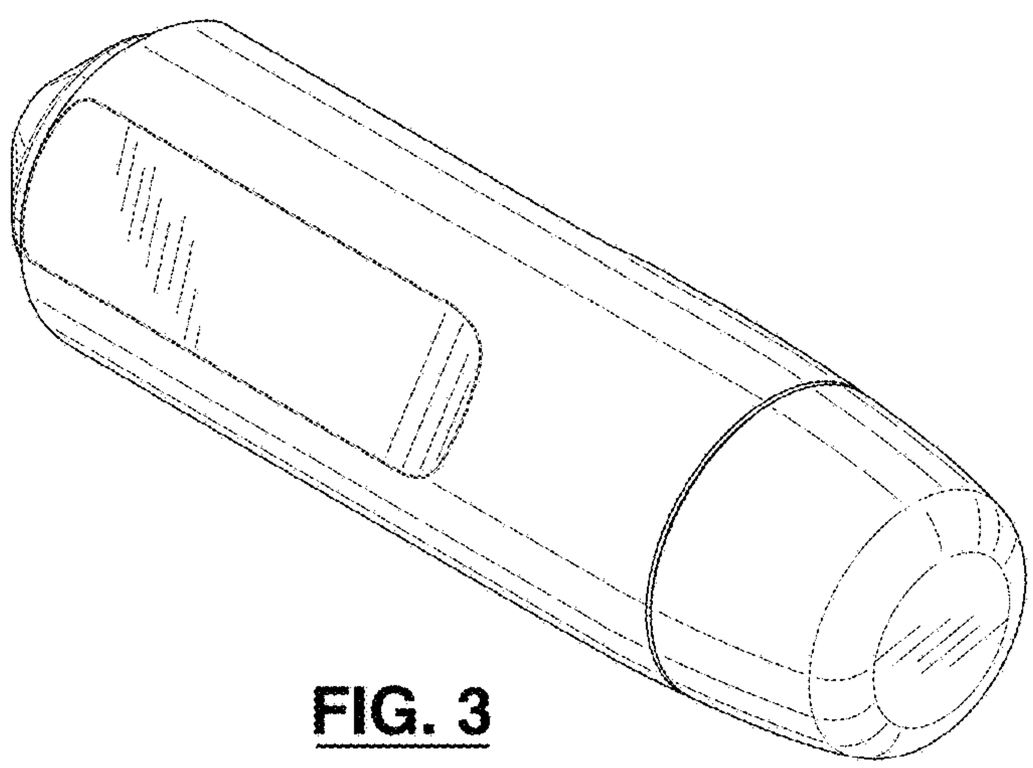

FIG. 3

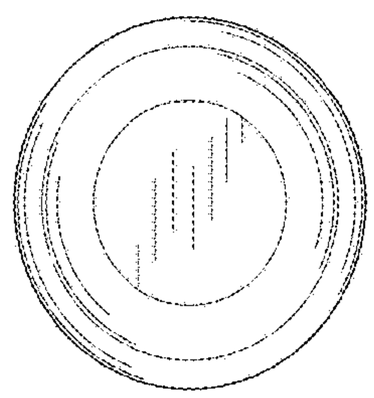

FIG. 6

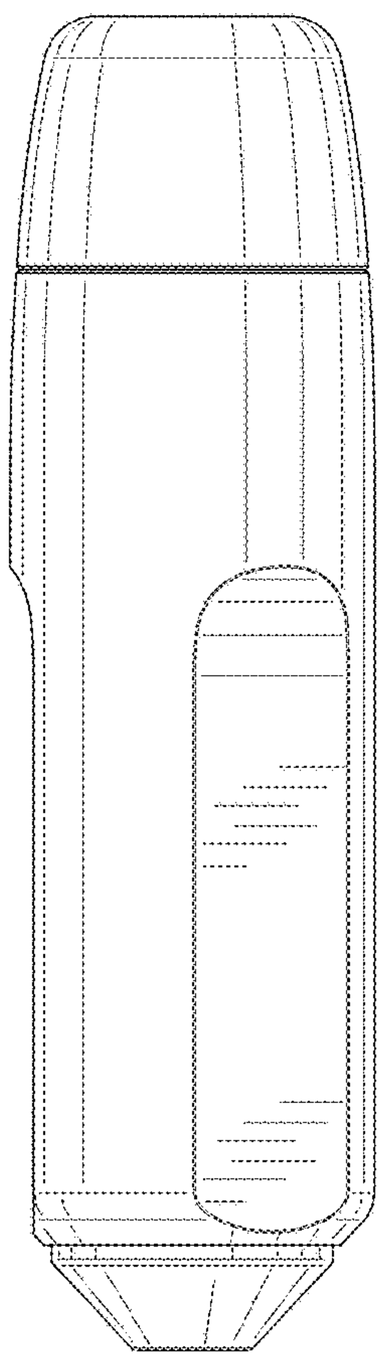

FIG. 5

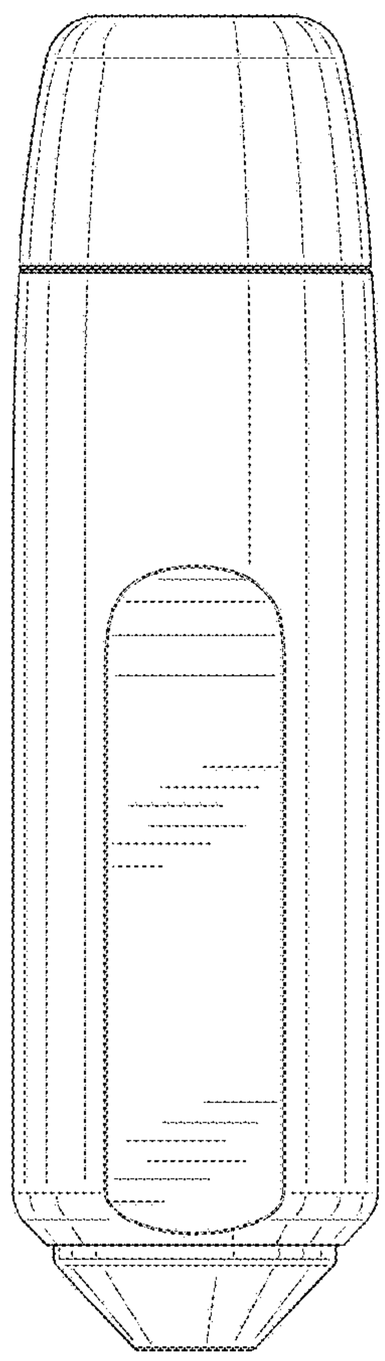

FIG. 7

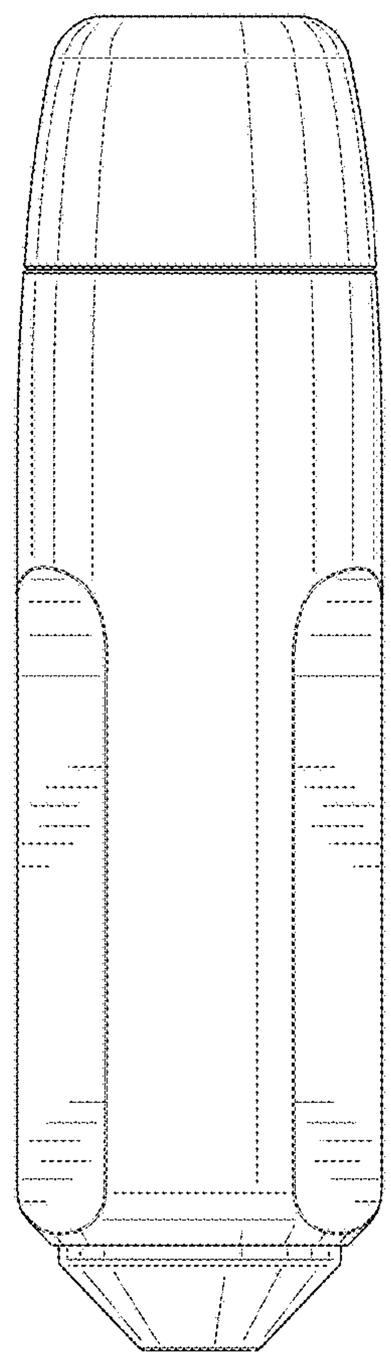

FIG. 8

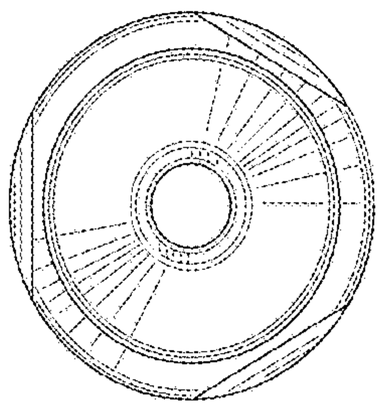

FIG. 4

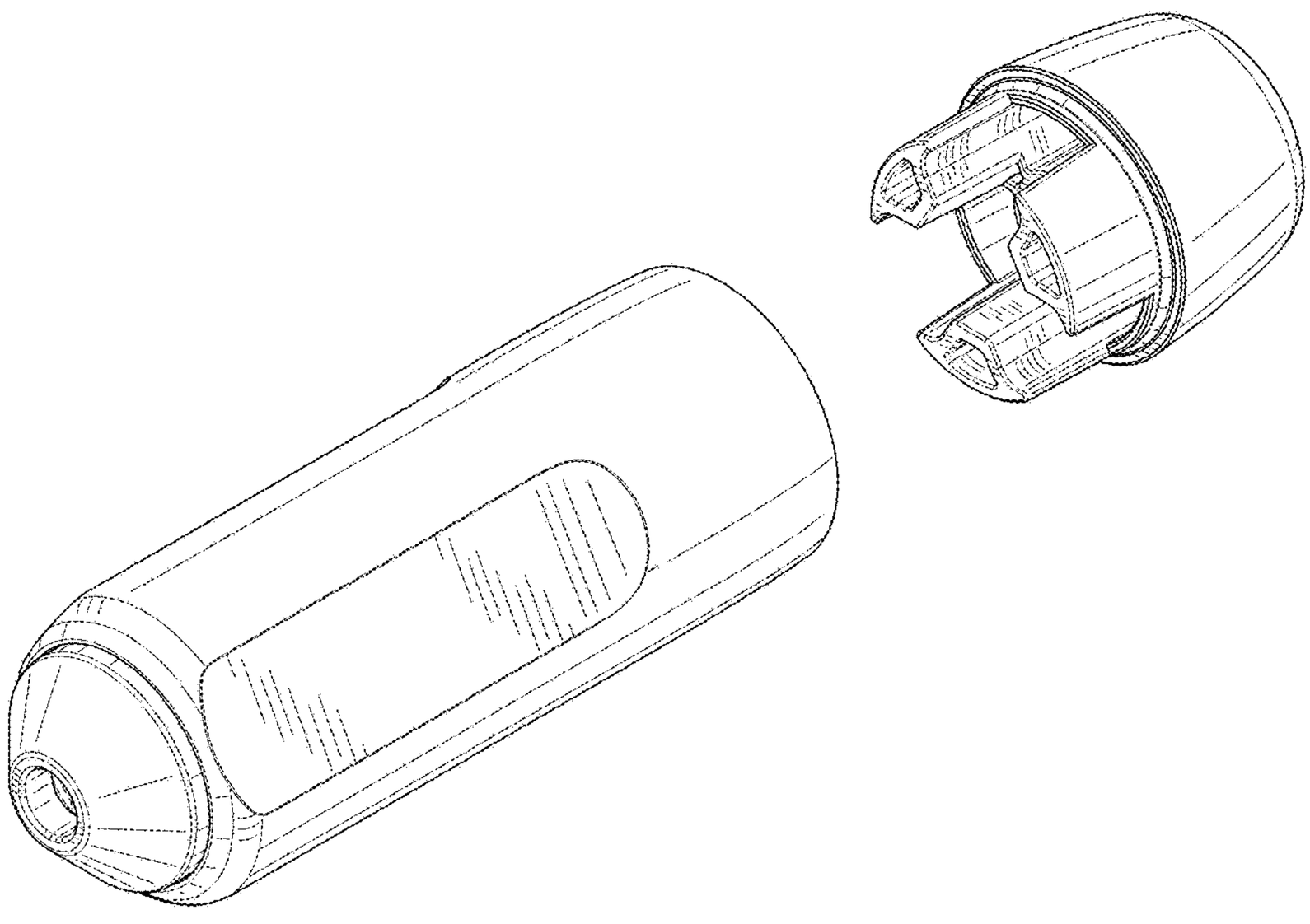

FIG. 9

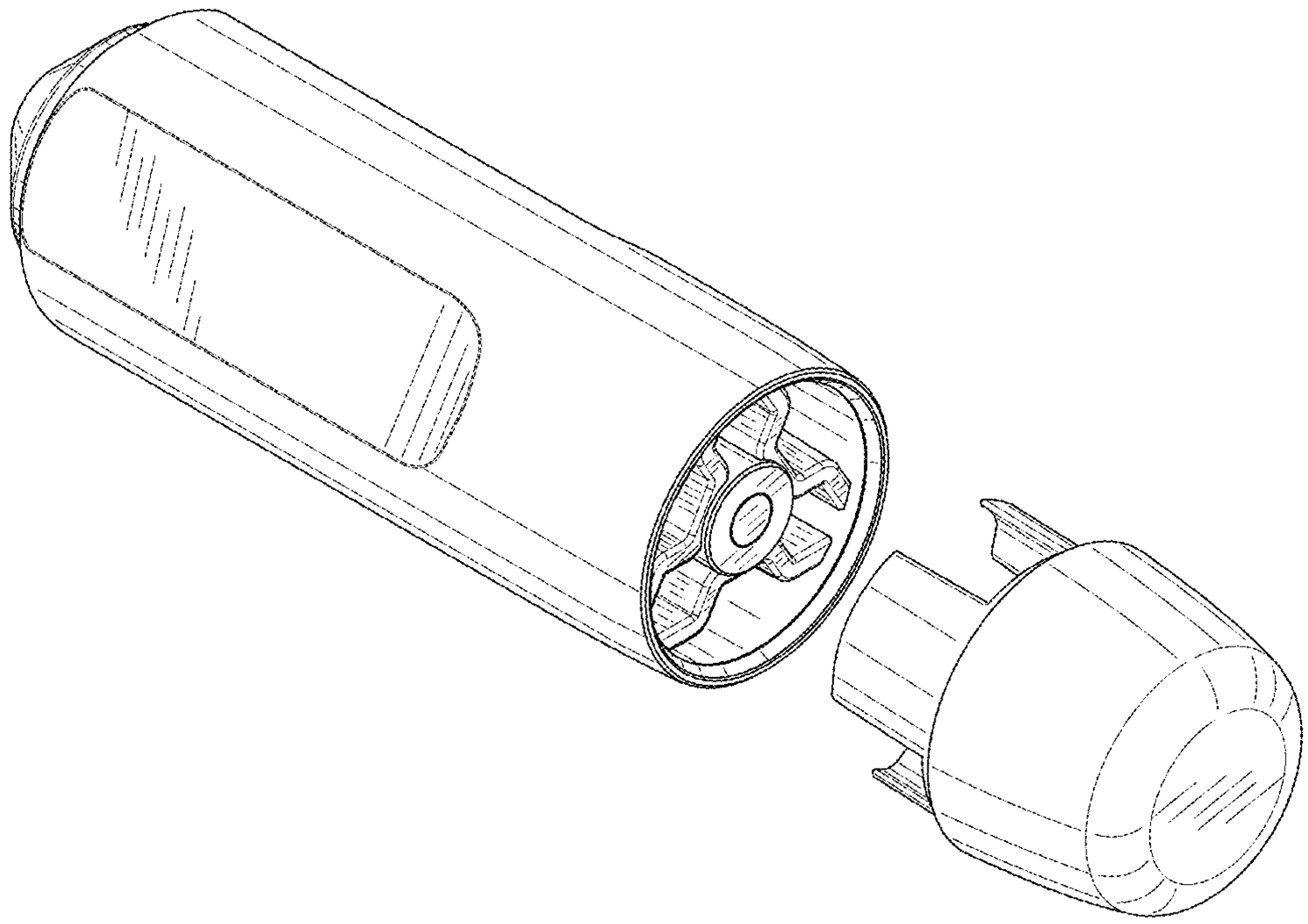

FIG. 10

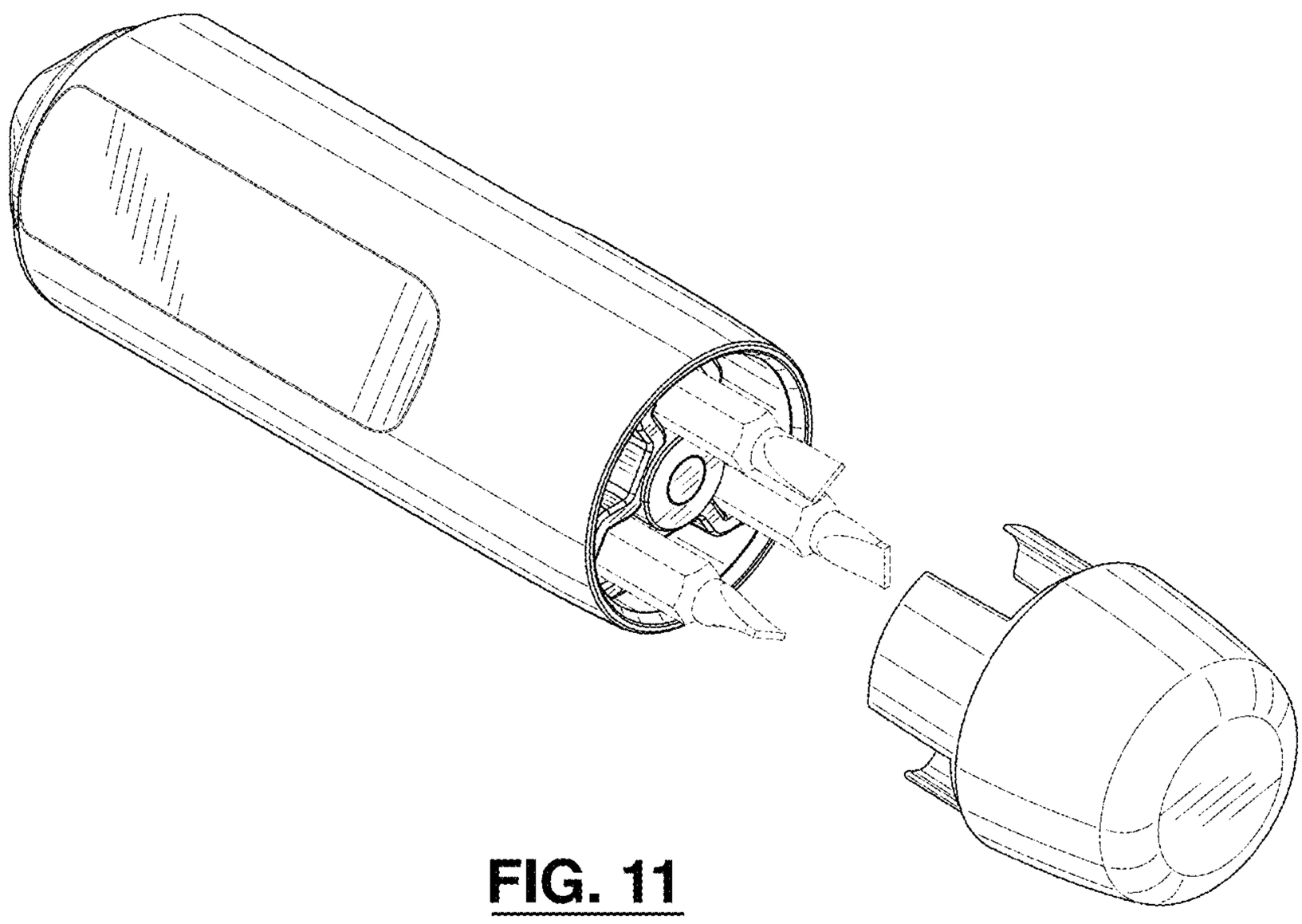

FIG. 11