US00D845099S

(12) United States Design Patent

Nelson

(10) Patent No.: US D845,099 S
(45) Date of Patent: ** Apr. 9, 2019

(54) **SPROCKET NOSE**

(71) Applicant: **Blount, Inc.**, Portland, OR (US)

(72) Inventor: **Aaron Nelson**, Portland, OR (US)

(73) Assignee: **Blount, Inc.**, Portland, OR (US)

(**) Term: **15 Years**

(21) Appl. No.: **29/617,078**

(22) Filed: **Sep. 11, 2017**

(51) **LOC (11) Cl.** **08-03**

(52) **U.S. Cl.**
USPC **D8/65**; D8/354

(58) **Field of Classification Search**
USPC D8/16, 19, 20, 64, 65, 70, 71, 354; D15/138, 133
CPC B27B 17/025; B27B 17/00; B27B 17/02; B27B 17/04; Y10T 83/8878
See application file for complete search history.

(56) **References Cited**

U.S. PATENT DOCUMENTS

2,693,206 A * 11/1954 Anttonen B27B 17/04 30/123.4
4,561,181 A * 12/1985 Weisgerber B27B 17/025 30/387
4,722,141 A * 2/1988 Lim B27B 17/025 30/381
D296,886 S * 7/1988 Young, Jr. D12/162
5,471,751 A * 12/1995 Ball B27B 17/025 30/383
5,842,279 A * 12/1998 Andress B27B 17/025 30/387
6,427,342 B1 * 8/2002 Breitbarth B27B 17/025 30/383
6,588,110 B2 * 7/2003 Galster B27B 17/02 30/382
D754,508 S * 4/2016 Yanoo D8/65
D758,812 S * 6/2016 Green D8/20
D785,426 S * 5/2017 Yanoo D8/65
2004/0111897 A1 * 6/2004 Graves B27B 17/025 30/387
2011/0192039 A1 * 8/2011 Fuchs B27B 17/025 30/383
2018/0036901 A1 * 2/2018 Tsumura B23D 57/02

* cited by examiner

Primary Examiner — Sandra S Snapp
Assistant Examiner — Ieisha N Price
(74) *Attorney, Agent, or Firm* — Schwabe Williamson & Wyatt, P.C.

(57) **CLAIM**

I claim the ornamental design for a sprocket nose, as shown and described.

DESCRIPTION

FIG. **1** is a perspective view of a sprocket nose showing my new design in a position of use on a chainsaw guide bar;
FIG. **2** is a top view thereof;
FIG. **3** is a bottom view thereof;
FIG. **4** is a front view thereof;
FIG. **5** is a back view thereof;
FIG. **6** is a right side view thereof;
FIG. **7** is a left side view thereof;
FIG. **8** is a perspective view of the sprocket nose wherein a portion of the environmental subject matter has been removed for ease of illustration; and,
FIG. **9** is another perspective view of the sprocket nose wherein a portion of the environmental subject matter has been removed for ease of illustration.
The dash-dot-dash broken line immediately adjacent to the shaded area defines the bounds of the claimed design and forms no part thereof. The remainder of the broken lines are provided for environmental purposes only and form no part of the claimed design.

1 Claim, 6 Drawing Sheets

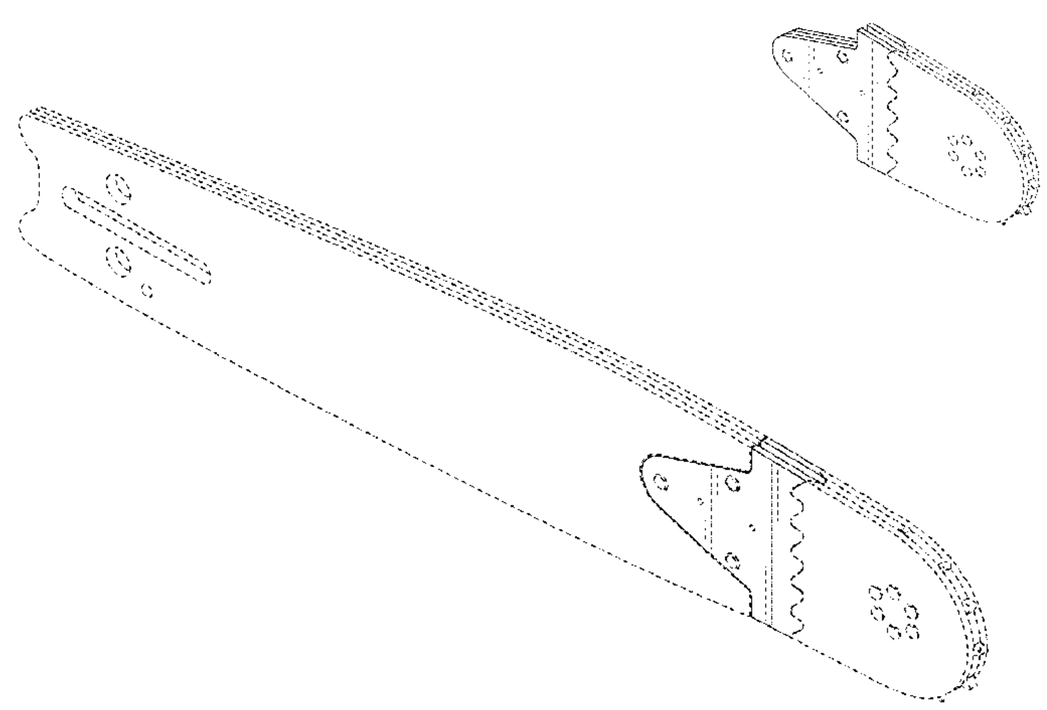

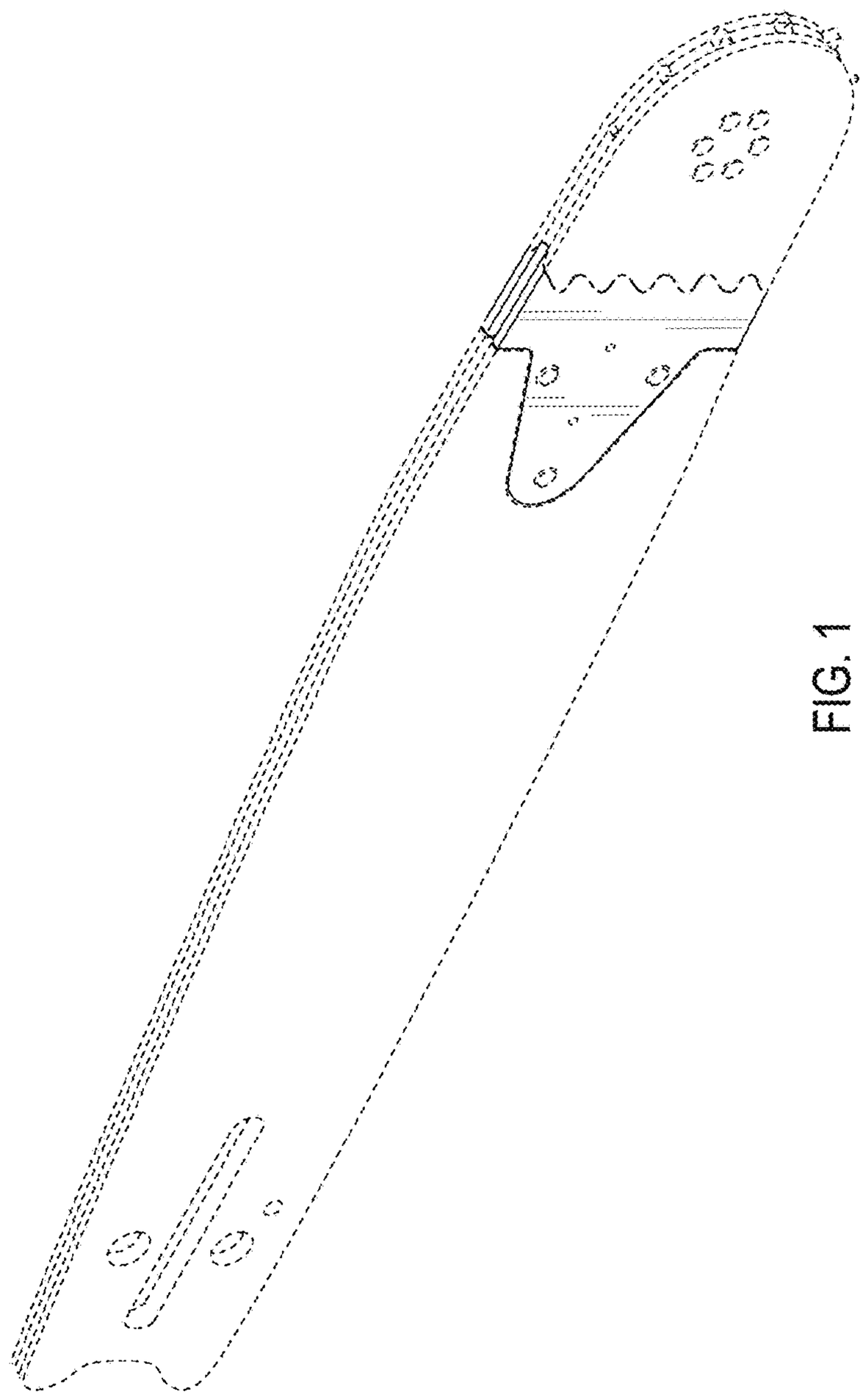

FIG. 1

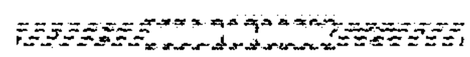

FIG. 3

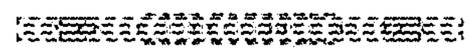

FIG. 2

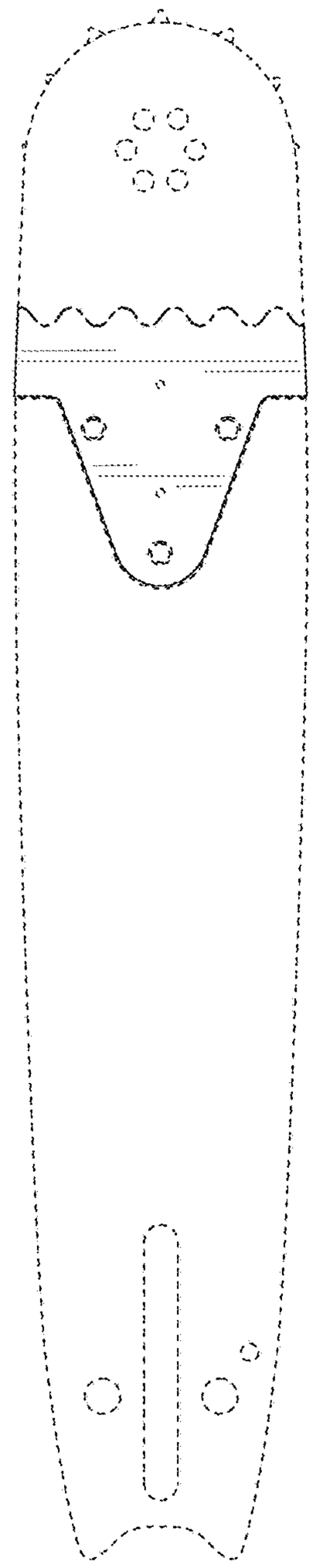

FIG. 4

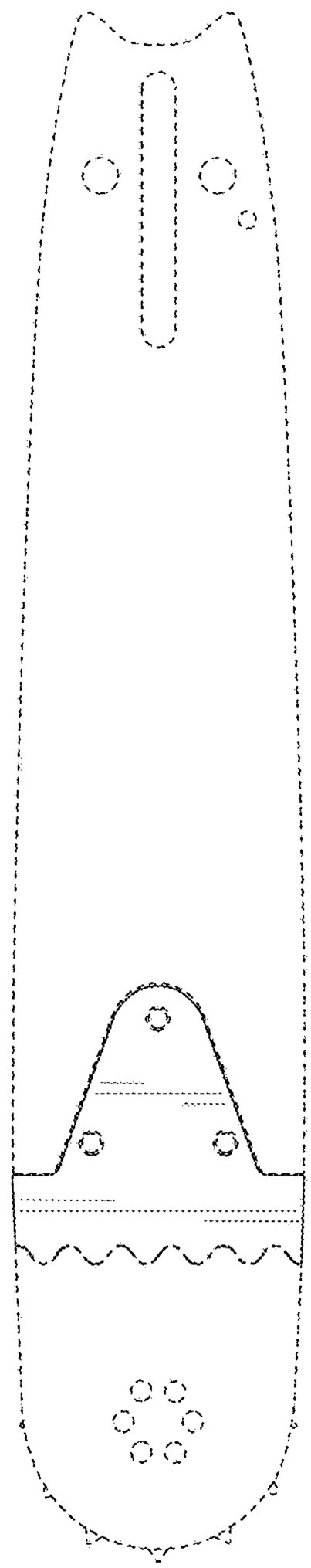

FIG. 5

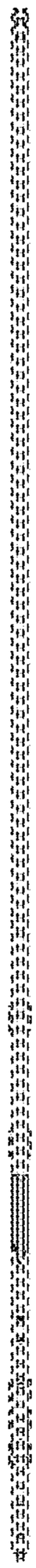

FIG. 6

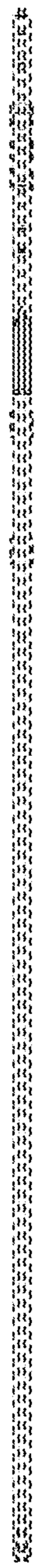

FIG. 7

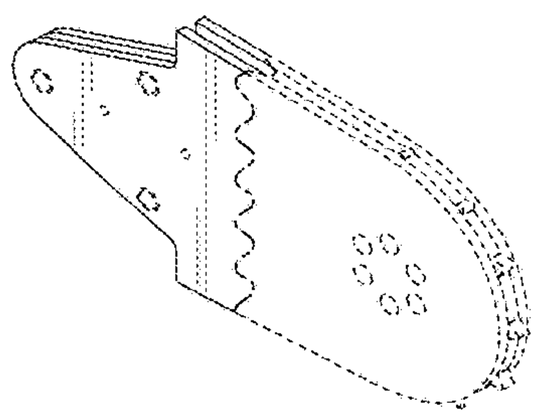

FIG. 8

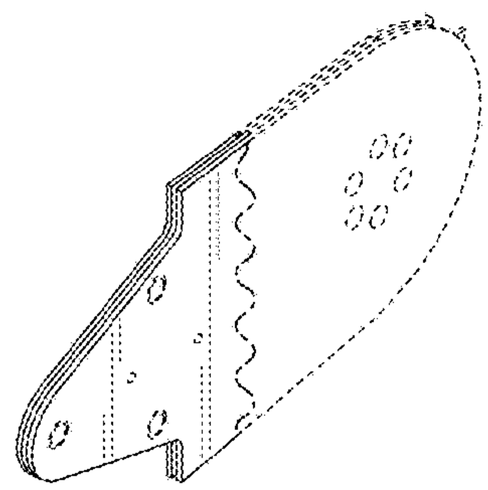

FIG. 9