US00D844832S

(12) United States Design Patent

Gill et al.

(10) Patent No.: US D844,832 S

(45) Date of Patent: ** *Apr. 2, 2019

(54) **MODULAR BUILDING**

(71) Applicant: **KwikSpace Guam**, Hagatna, GU (US)

(72) Inventors: **Peter E. Gill**, Tamuning, GU (US); **Peter E. Gill, III**, Tamuning, GU (US)

(73) Assignee: **KWIKSPACE GUAM**, Hagatna, GU (US)

(*) Notice: This patent is subject to a terminal disclaimer.

(**) Term: **15 Years**

(21) Appl. No.: **29/608,394**

(22) Filed: **Jun. 21, 2017**

Related U.S. Application Data

(63) Continuation-in-part of application No. 29/580,825, filed on Oct. 13, 2016, now Pat. No. Des. 814,658.

(51) **LOC (11) Cl.** **25-03**

(52) **U.S. Cl.**
USPC **D25/33**

(58) **Field of Classification Search**
USPC D25/1, 3, 4, 12, 15–34, 56, 61; D21/837; 135/122, 906, 115
CPC E04H 6/44; E04H 6/025; E04H 1/1205; E04H 15/36; E04H 15/322; E04H 15/44; E04H 2001/1283; E04H 1/04; E04H 1/02; E04H 9/14; E04B 1/342; E04B 1/3205; E04B 1/34305; E04B 7/166; E04B 1/38415
See application file for complete search history.

(56) **References Cited**

U.S. PATENT DOCUMENTS

5,706,614 A 1/1998 Wiley, Jr. et al.
D390,970 S * 2/1998 Abrams D25/1
7,712,265 B2 * 5/2010 Overmyer, Jr. E04H 1/02 52/143
8,001,730 B2 8/2011 Wallance
D683,047 S * 5/2013 Gill D25/22
8,640,396 B1 * 2/2014 Gill E04H 1/12 52/79.7
D727,531 S * 4/2015 Gill D25/22
D781,439 S * 3/2017 Gill D25/1
D781,440 S * 3/2017 Gill D25/1
D781,441 S * 3/2017 Gill D25/1
D781,442 S * 3/2017 Gill D25/32
D781,443 S * 3/2017 Gill D25/32
D781,444 S * 3/2017 Gill D25/32
D783,179 S * 4/2017 Gill D25/32
D783,857 S * 4/2017 Gill D25/1
D814,658 S * 4/2018 Gill D25/33
2003/0009954 A1 * 1/2003 Bradley E04H 1/1205 52/79.1
2005/0066589 A1 * 3/2005 Bedell E04B 1/34815 52/79.1

(Continued)

Primary Examiner — Brett Miller
(74) *Attorney, Agent, or Firm* — Donald J. Ersler

(57) **CLAIM**

The ornamental design for a modular building, as shown and described.

DESCRIPTION

FIG. **1** is a top perspective view of a modular building incorporating our new design;
FIG. **2** is a bottom perspective view thereof;
FIG. **3** is a left side view thereof;
FIG. **4** is a right side view thereof;
FIG. **5** is a front view thereof;
FIG. **6** is a rear view thereof;
FIG. **7** is a top plan view thereof; and,
FIG. **8** is a bottom plan view thereof.
The broken lines shown in the drawings illustrate portions of the modular building that form no part of the claimed invention.

1 Claim, 6 Drawing Sheets

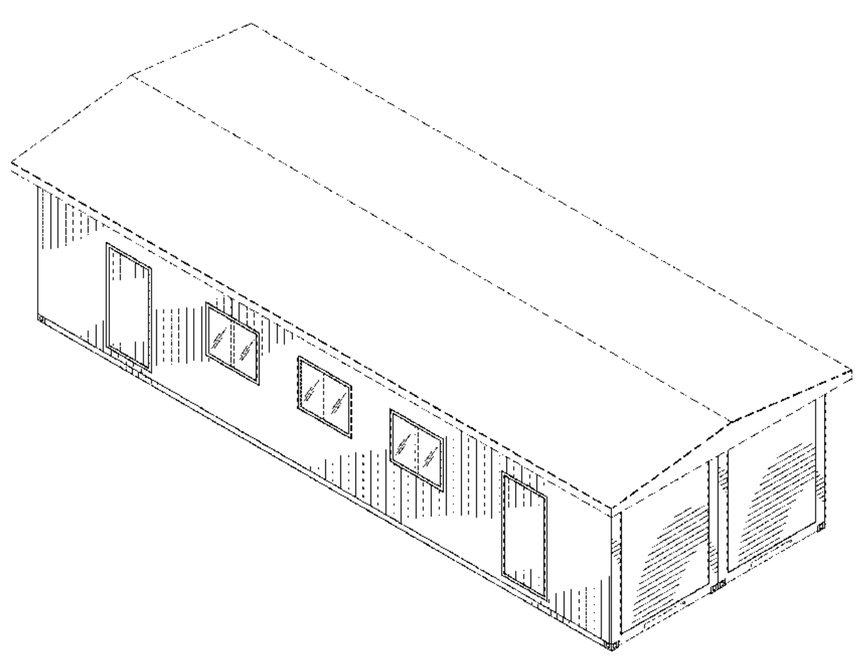

(56) **References Cited**

U.S. PATENT DOCUMENTS

2005/0262778 A1* 12/2005 Allen E04B 1/34815 52/79.1
2010/0043308 A1* 2/2010 Keeble E04B 1/34321 52/79.1
2017/0260737 A1* 9/2017 Ota E04H 1/02

* cited by examiner

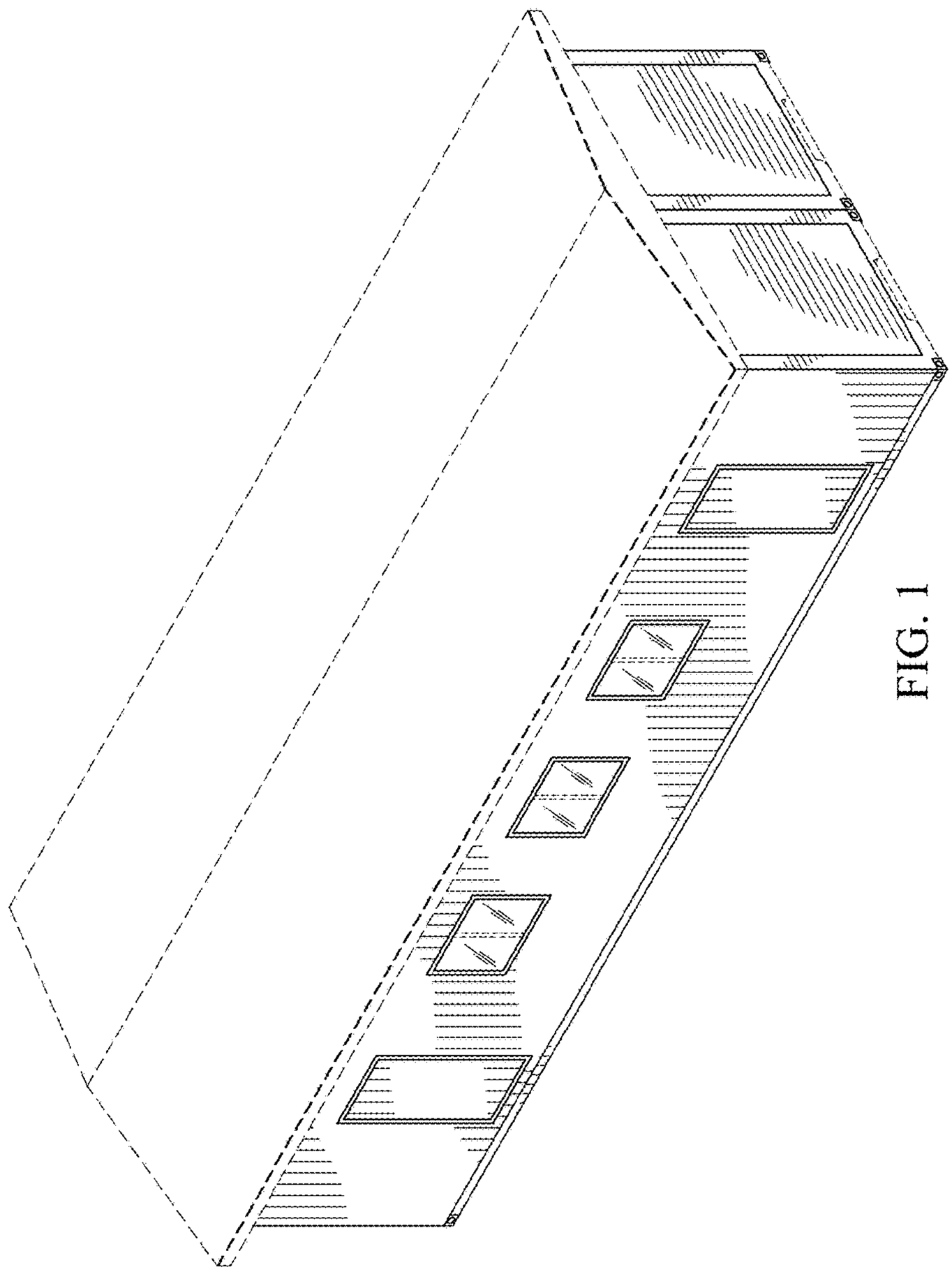

FIG. 1

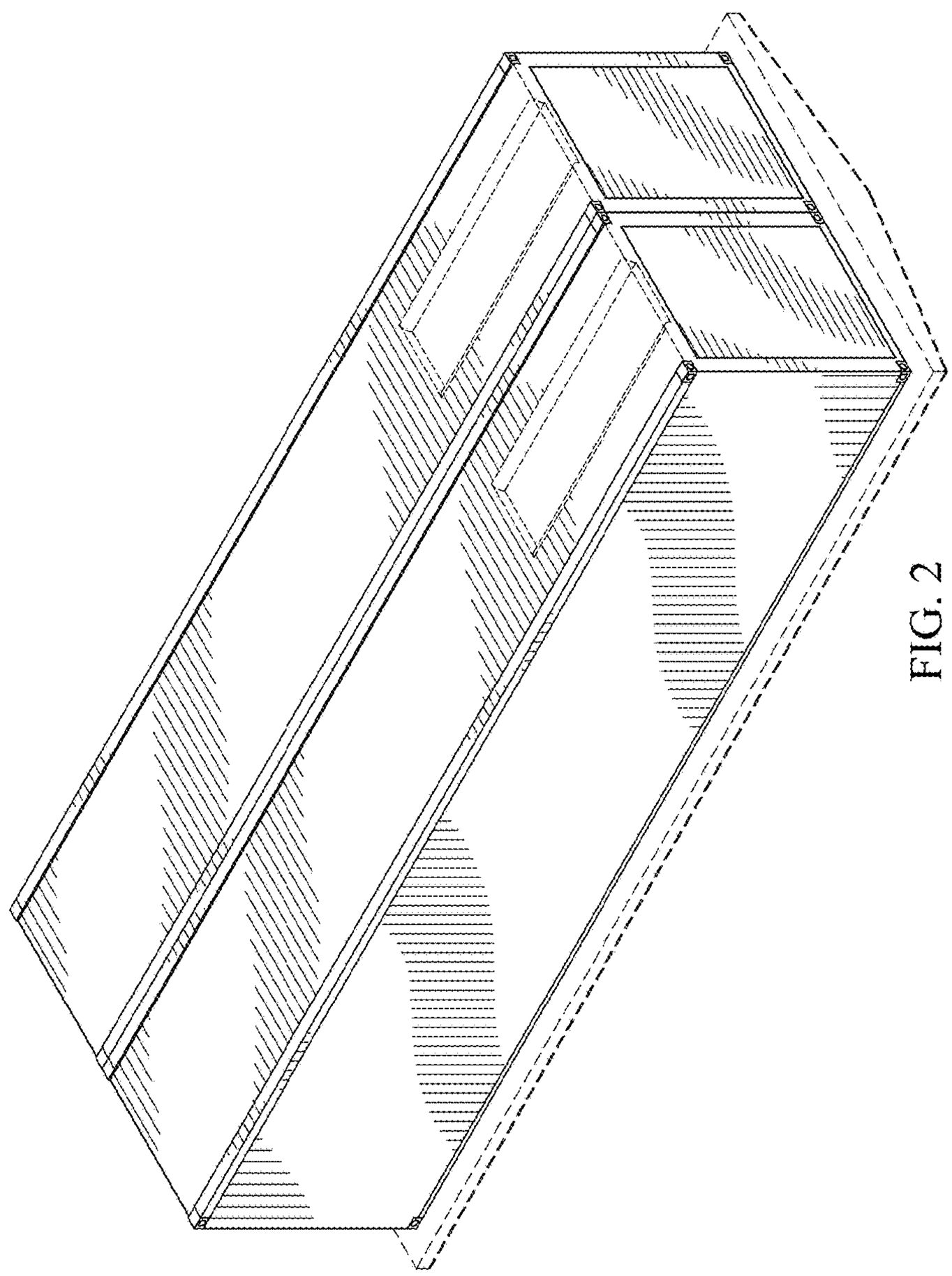

FIG. 2

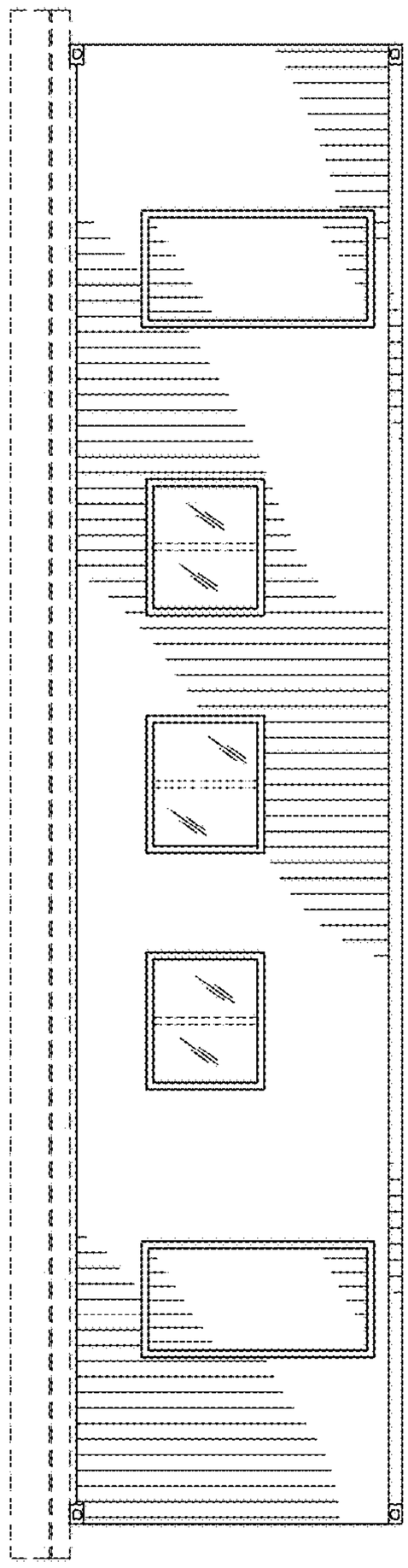

FIG. 3

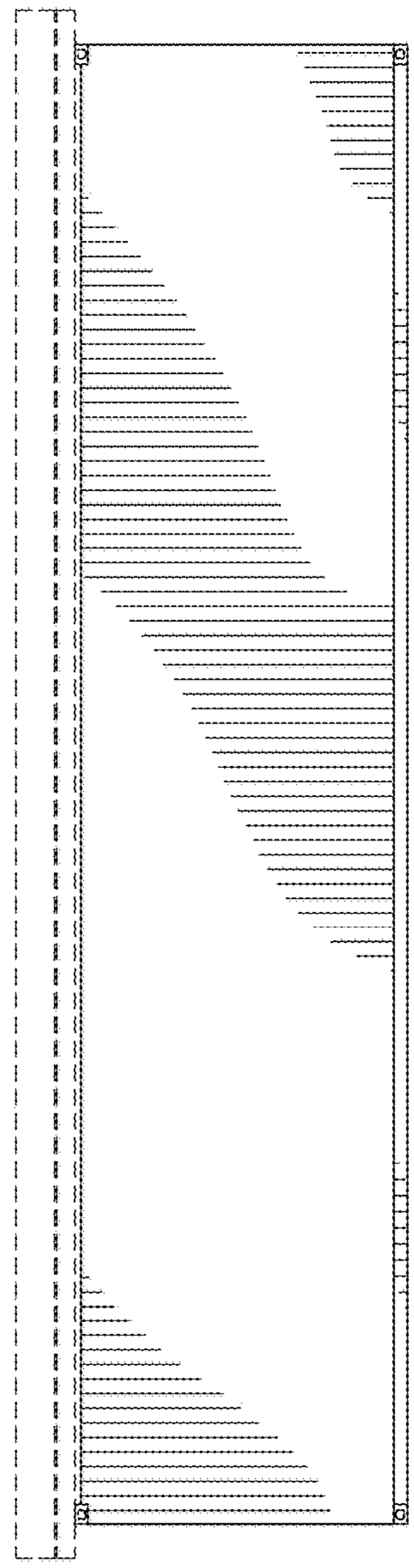

FIG. 4

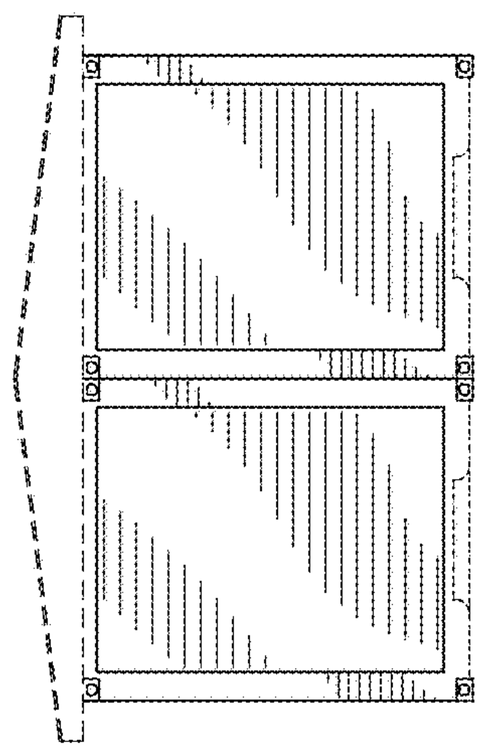

FIG. 5

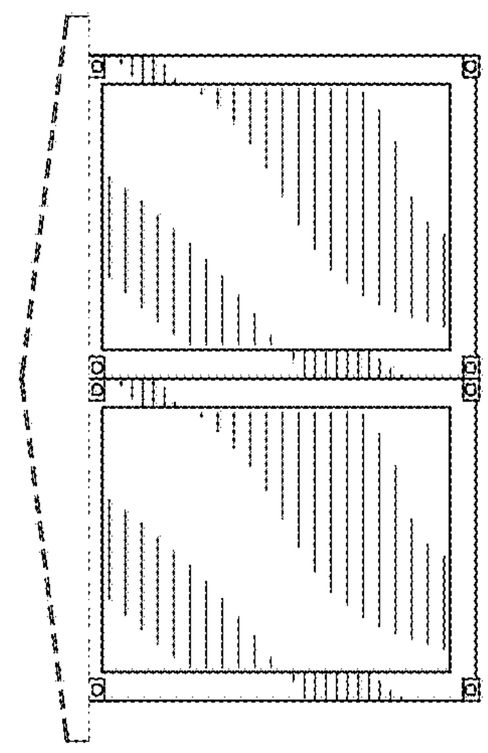

FIG. 6

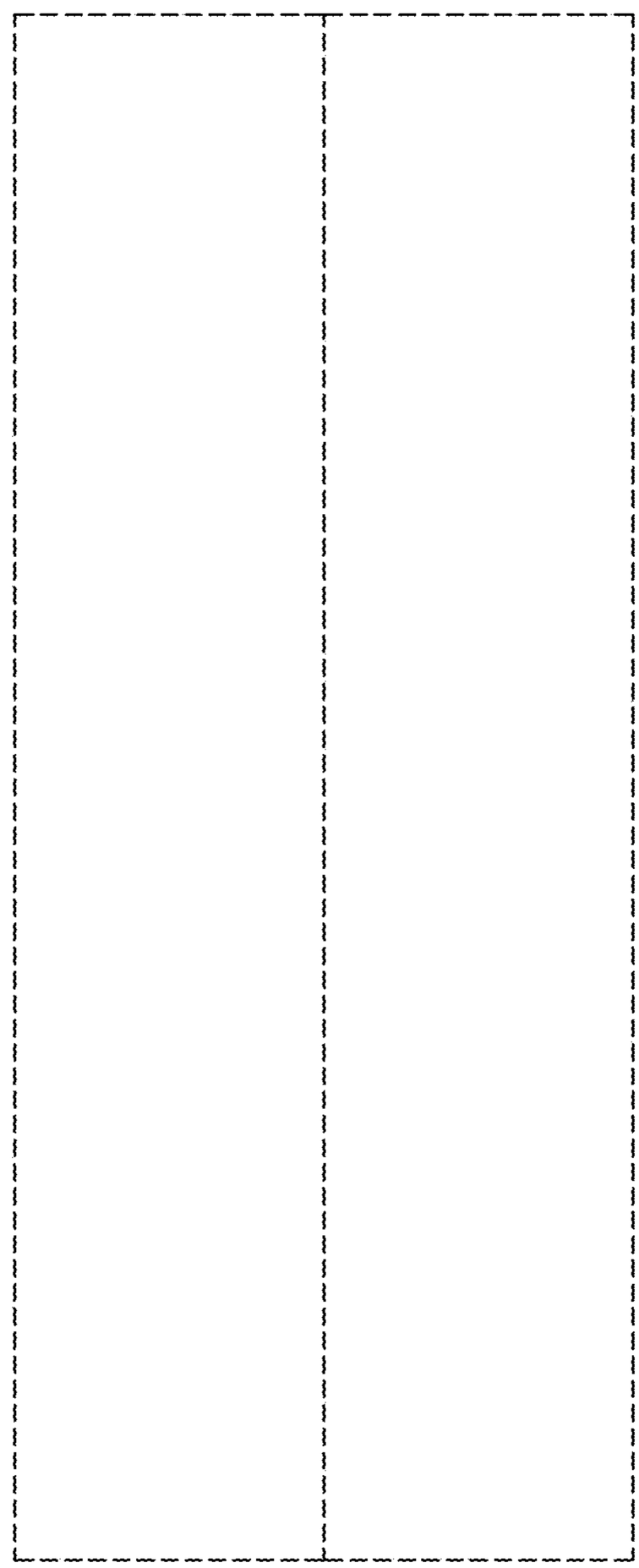

FIG. 7

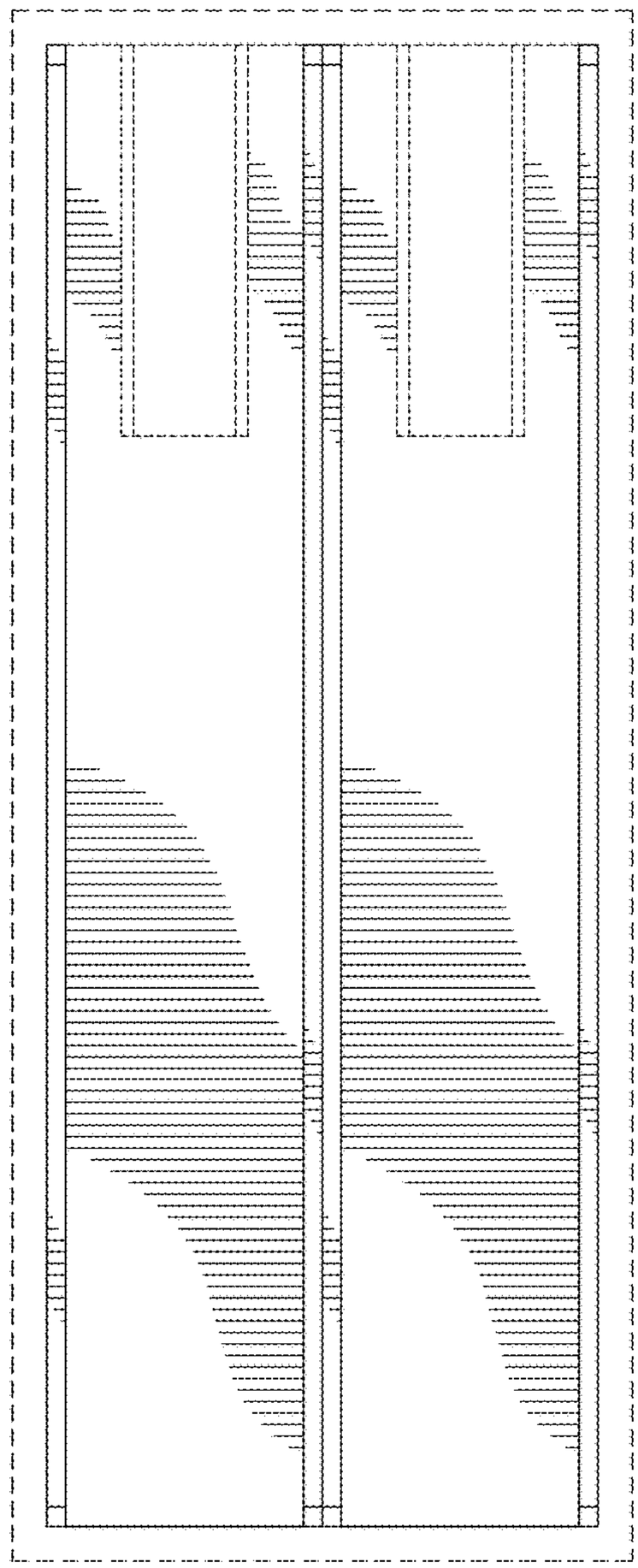

FIG. 8