US00D843610S

(12) United States Design Patent

Lai et al.

(10) Patent No.: US D843,610 S
(45) Date of Patent: ** Mar. 19, 2019

(54) **LIGHT-EMITTING DEVICE**

(71) Applicant: **EPISTAR CORPORATION**, Hsinchu (TW)

(72) Inventors: **Lung-Kuan Lai**, Hsinchu (TW); **Ching-Tai Cheng**, Hsinchu (TW)

(73) Assignee: **Epistar Corporation**, Hsinchu (TW)

(**) Term: **15 Years**

(21) Appl. No.: **29/607,099**

(22) Filed: **Jun. 9, 2017**

(30) **Foreign Application Priority Data**

Dec. 9, 2016 (TW) 105307487

(51) **LOC (11) Cl.** **26-04**

(52) **U.S. Cl.**
USPC **D26/1**; D13/180

(58) **Field of Classification Search**
USPC D26/1; D13/180
CPC H01L 25/167; H01L 31/02; H01L 33/00; H01L 33/04; H01L 33/08; H01L 33/10; H01L 33/20; H01L 33/38; H01L 33/42; H01L 33/48; H01L 33/62; H01L 33/483; H01L 33/486; F21K 9/00; F21K 9/30; F21K 9/54; H01R 5/00; H01R 13/46; H01R 13/514; H01R 31/048; H01R 31/02; H01J 5/00; H01J 5/16; H01J 15/00; H01J 5/48; H01J 5/50; H01J 19/54
See application file for complete search history.

(56) **References Cited**

U.S. PATENT DOCUMENTS

D508,573 S * 8/2005 Matsui D26/1
D636,900 S * 4/2011 Chou D26/1

* cited by examiner

Primary Examiner — Marcus A Jackson
(74) *Attorney, Agent, or Firm* — Muncy, Geissler, Olds & Lowe, P.C.

(57) **CLAIM**

The ornamental design for a light-emitting device, as shown and described.

DESCRIPTION

FIG. **1** is a front, left, top perspective view of a light-emitting device showing our new design;
FIG. **2** is a front, right, top perspective view thereof;
FIG. **3** is a front elevational view thereof;
FIG. **4** is a rear elevational view thereof;
FIG. **5** is a left side view thereof;
FIG. **6** is a right side view thereof;
FIG. **7** is a top plan view thereof; and,
FIG. **8** is a bottom plan view thereof.

1 Claim, 5 Drawing Sheets

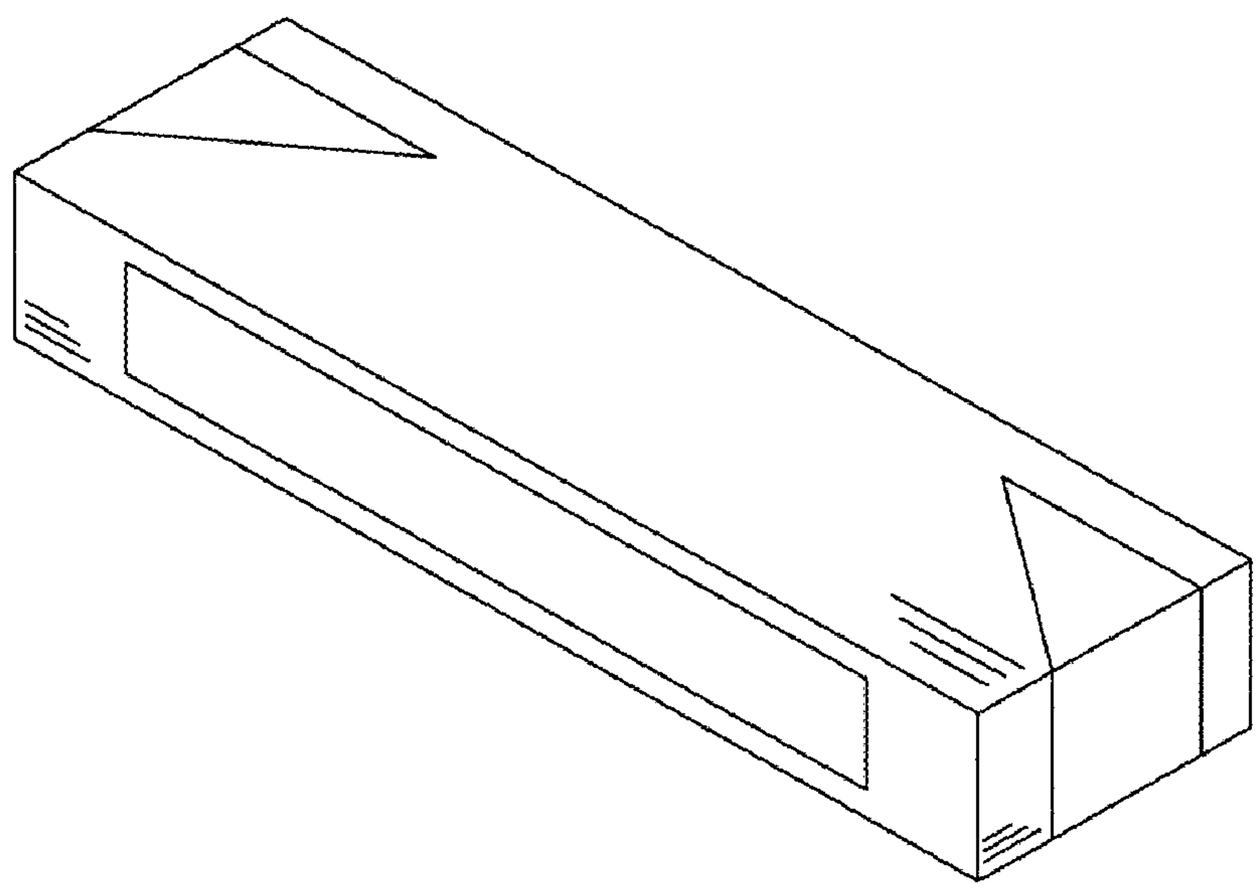

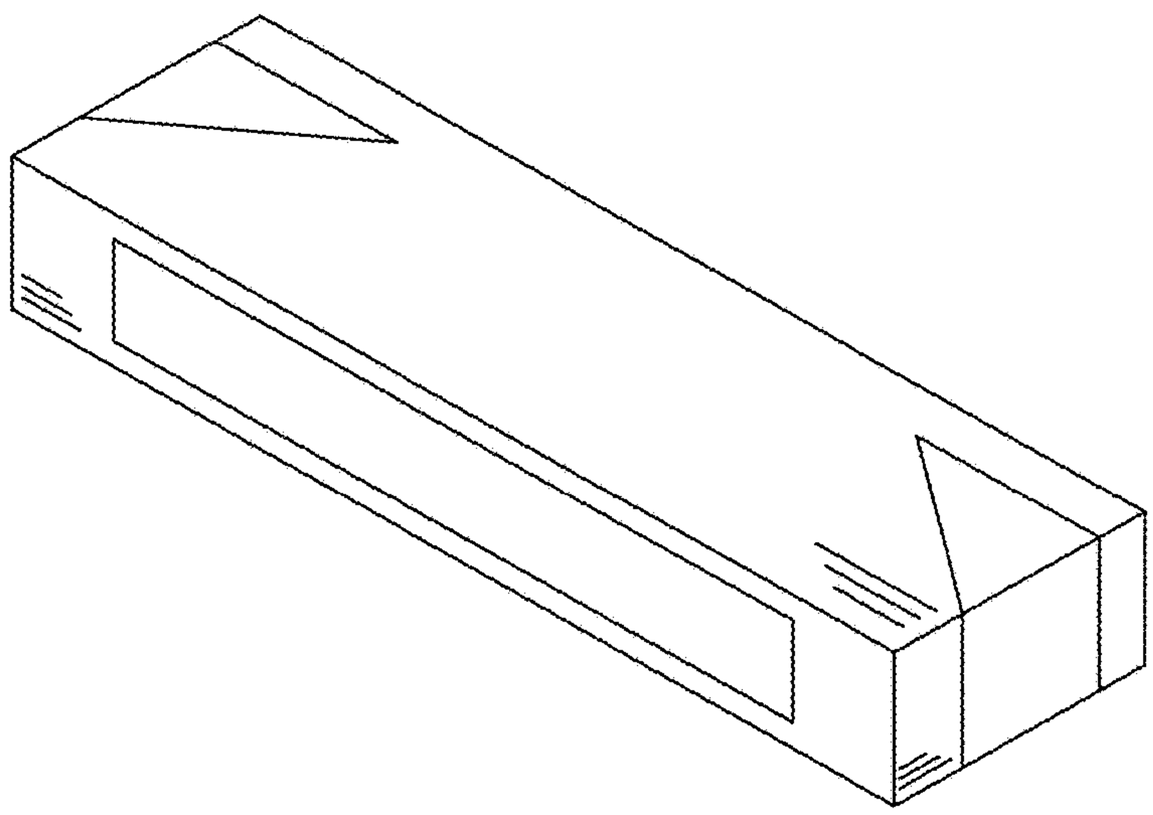

FIG. 1

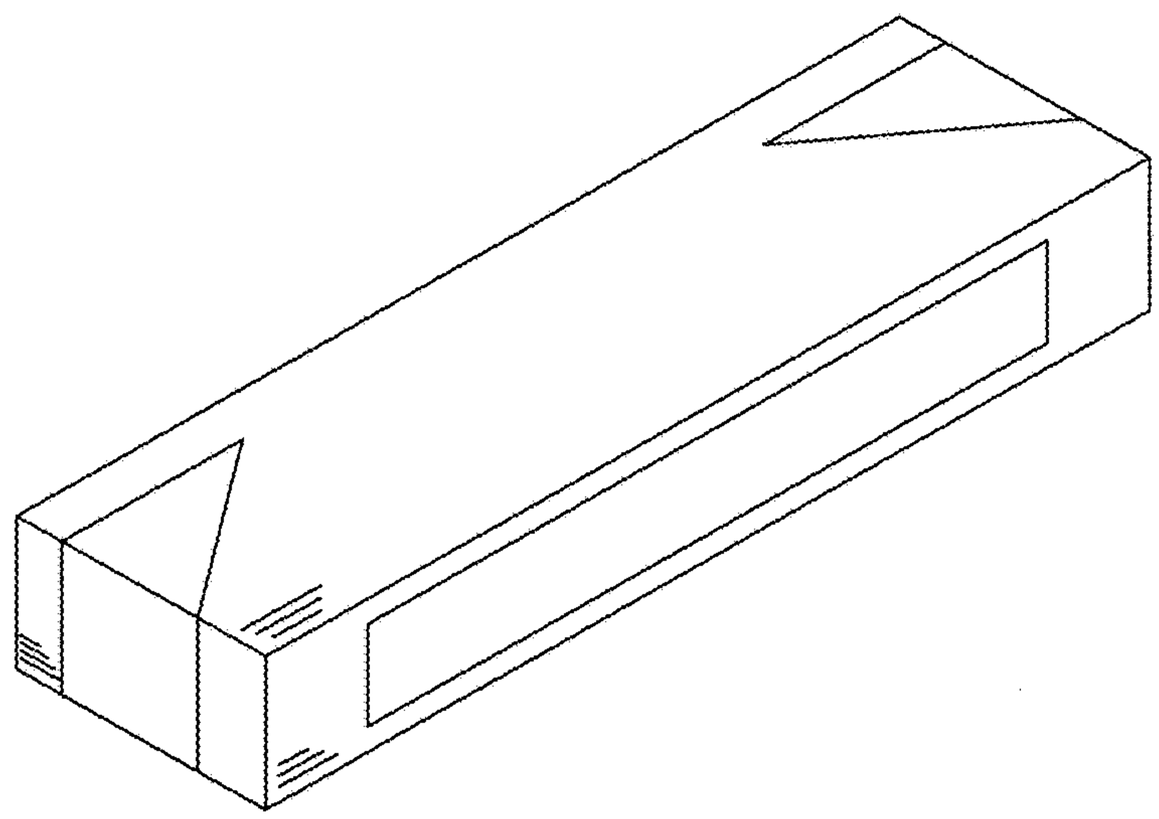

FIG. 2

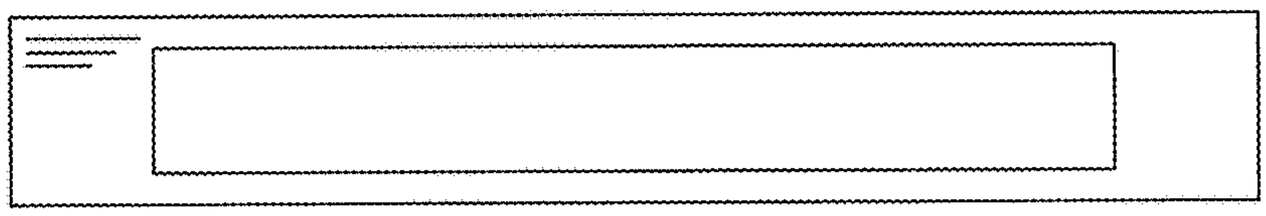

FIG. 3

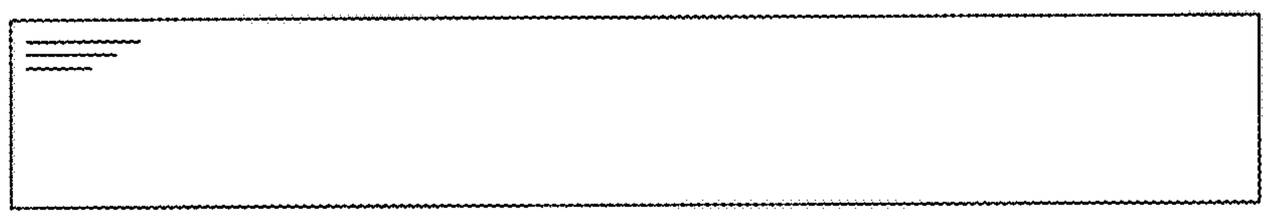

FIG. 4

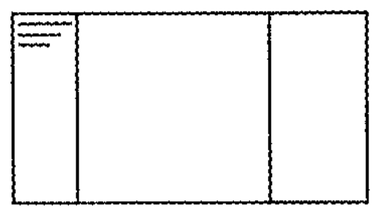

FIG. 5

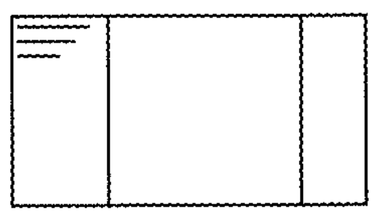

FIG. 6

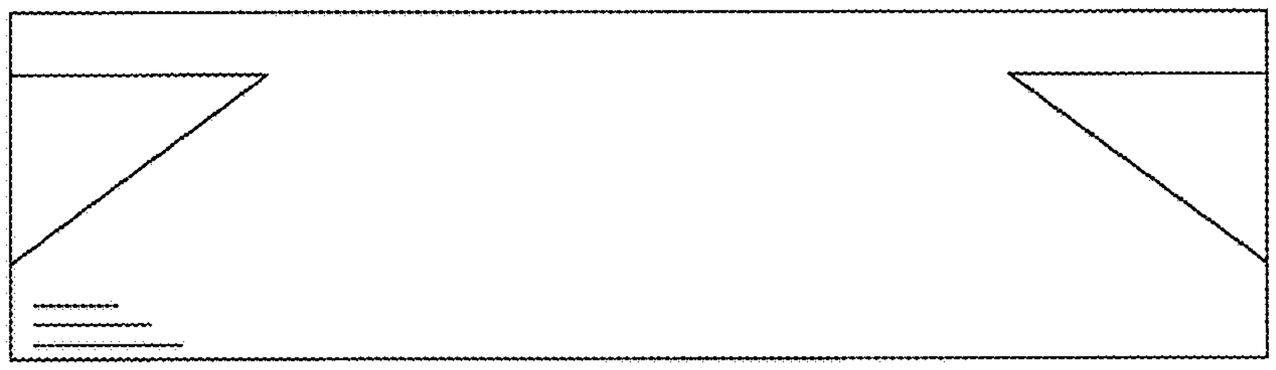

FIG. 7

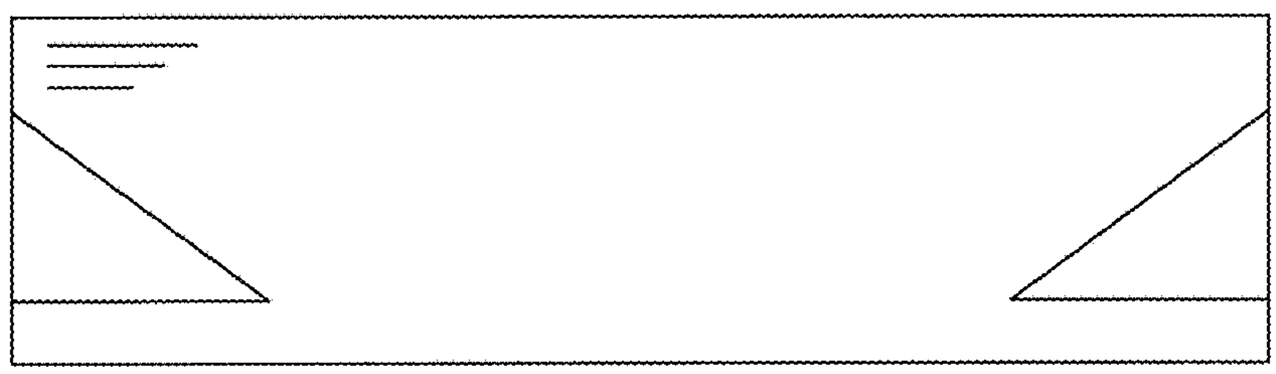

FIG. 8