US00D842952S

(12) United States Design Patent

Schweigert et al.

(10) Patent No.: US D842,952 S
(45) Date of Patent: ** Mar. 12, 2019

(54) **GOLF CLUB HEAD**

(71) Applicant: **PARSONS XTREME GOLF, LLC**, Scottsdale, AZ (US)

(72) Inventors: **Bradley D. Schweigert**, Anthem, AZ (US); **Caleb S. Kroloff**, Phoenix, AZ (US)

(73) Assignee: **PARSONS XTREME GOLF, LLC**, Scottsdale, AZ (US)

(**) Term: **15 Years**

(21) Appl. No.: **29/611,170**

(22) Filed: **Jul. 19, 2017**

Related U.S. Application Data

(63) Continuation-in-part of application No. 29/608,191, filed on Jun. 20, 2017, now abandoned.

(51) **LOC (11) Cl.** **21-02**

(52) **U.S. Cl.**
USPC **D21/743**

(58) **Field of Classification Search**
USPC D21/736–746, 759
See application file for complete search history.

(56) **References Cited**

U.S. PATENT DOCUMENTS

922,444	A		5/1909	Youds
RE19,178	E		5/1934	Spiker
4,043,562	A		6/1977	Shillington
4,754,977	A		7/1988	Sahm
4,869,507	A		9/1989	Sahm
D335,317	S		5/1993	Shearer
D335,692	S		5/1993	Antonious
D336,757	S		6/1993	Antonious
D350,582	S		9/1994	Miansian et al.
5,429,366	A		7/1995	McCabe
D363,101	S		10/1995	Sturm
D365,864	S		1/1996	Sturm
5,489,097	A		2/1996	Simmons
D368,751	S		4/1996	Rife
D369,393	S		4/1996	Takahashi et al.
5,571,053	A		11/1996	Lane
D378,688	S		4/1997	Cameron
D385,609	S		10/1997	Cameron
5,683,307	A		11/1997	Rife
5,685,784	A	*	11/1997	Butler A63B 53/0487 473/255
D388,143	S		12/1997	Huan-Chiang
D389,207	S		1/1998	Cameron
D396,685	S		9/1998	Masuda
D399,290	S		10/1998	Sizemore, Jr.
D399,911	S		10/1998	Nicolette et al.
5,839,974	A		11/1998	McAllister
D405,836	S		2/1999	Nicolette et al.
D409,701	S		5/1999	Ashcraft et al.
5,924,938	A		7/1999	Hines
D422,655	S		4/2000	Hicks
D426,276	S		6/2000	Besnard et al.
D431,854	S		10/2000	Cameron
D432,192	S		10/2000	Hicks
D436,151	S		1/2001	Nicolette et al.
D437,374	S		2/2001	Cameron
D441,820	S		5/2001	Nicolette et al.
D443,668	S		6/2001	Nicolette et al.
D443,905	S		6/2001	Nicolette et al.
D444,833	S		7/2001	Wells et al.
6,264,571	B1		7/2001	Lekavich
D449,664	S		10/2001	Beebe et al.
D449,865	S		10/2001	Fife, Jr. et al.
D450,799	S		11/2001	Nicolette et al.
D451,973	S		12/2001	Wells et al.
6,348,014	B1		2/2002	Chiu
6,354,959	B1		3/2002	Nicolette et al.
6,394,910	B1		5/2002	McCarthy
D472,949	S		4/2003	Serrano
D474,821	S		5/2003	Wells et al.
D474,949	S		5/2003	Schaffeld et al.
D483,086	S		12/2003	Schweigert et al.
D486,872	S		2/2004	Schweigert et al.
D488,200	S		4/2004	Olsavsky
D498,276	S		11/2004	Schweigert et al.
6,902,496	B2		6/2005	Solheim et al.
D508,273	S	*	8/2005	Garner D21/743
D510,394	S	*	10/2005	Tang D21/742
D512,116	S		11/2005	Miraflor et al.
6,988,956	B2		1/2006	Cover et al.
D520,088	S		5/2006	Parr
D531,242	S		10/2006	Adams
D532,067	S		11/2006	Soracco et al.
D533,609	S	*	12/2006	Moore D21/742
7,153,220	B2		12/2006	Lo
D534,595	S		1/2007	Hasebe
7,156,752	B1		1/2007	Bennett
D536,401	S		2/2007	Kawami

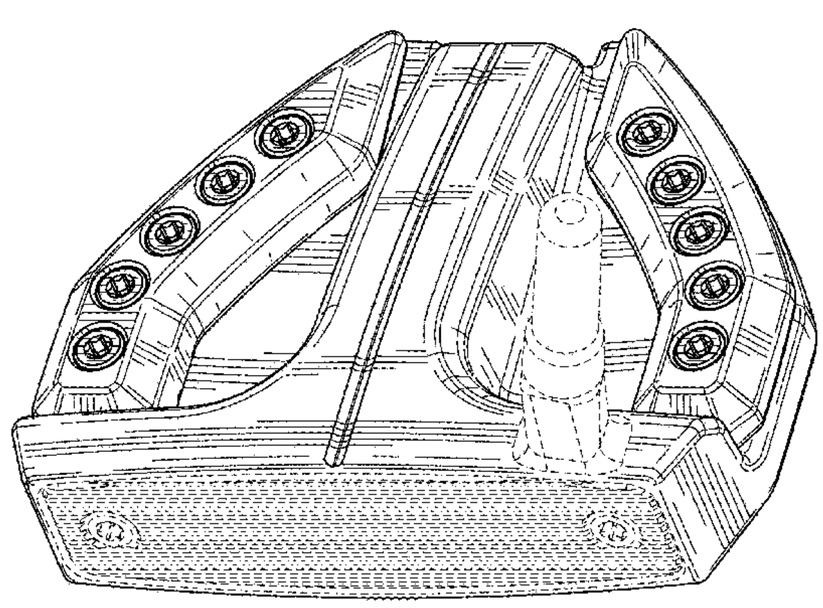

D536,403 S 2/2007 Kawami
D538,371 S 3/2007 Kawami
7,204,765 B2 4/2007 Cover et al.
D542,869 S 5/2007 Adams
D543,598 S 5/2007 Kuan et al.
D543,601 S 5/2007 Kawami
D555,219 S 11/2007 Lin
D556,277 S 11/2007 Broom
D557,361 S * 12/2007 Rollinson D21/743
D561,854 S 2/2008 Morris
7,331,876 B2 * 2/2008 Klein A63B 53/007 473/251
7,351,162 B2 4/2008 Soracco et al.
D569,461 S 5/2008 Morris
D569,930 S 5/2008 Nehrbas
7,396,289 B2 7/2008 Soracco et al.
D575,366 S * 8/2008 Rollinson D21/744
D577,085 S 9/2008 Nicolette et al.
D577,086 S 9/2008 Nicolette et al.
D579,506 S 10/2008 Nicolette et al.
D579,995 S 11/2008 Nicolette et al.
D582,497 S 12/2008 Rollinson
7,473,189 B2 1/2009 Schweigert et al.
7,491,131 B2 2/2009 Vinton
D595,793 S * 7/2009 Rollinson D21/736
D599,425 S 9/2009 Laub
D600,760 S * 9/2009 Serrano D21/736
D600,763 S 9/2009 Cameron
7,744,485 B2 6/2010 Jones et al.
D620,993 S 8/2010 Laub
D621,460 S * 8/2010 Serrano D21/742
D621,461 S * 8/2010 Serrano D21/742
D621,891 S * 8/2010 Serrano D21/742
D623,709 S 9/2010 Serrano et al.
D631,925 S 2/2011 Broom
7,887,432 B2 2/2011 Jones et al.
7,909,707 B2 3/2011 Klein
7,918,745 B2 4/2011 Morris et al.
D636,891 S 5/2011 Nicolette et al.
D642,643 S 8/2011 Nicolette et al.
D643,485 S * 8/2011 Nicolette D21/736
D645,104 S 9/2011 Nicolette et al.
8,096,039 B2 1/2012 Soracco et al.
D653,718 S * 2/2012 Stokke D21/743
D661,753 S 6/2012 Cameron et al.
D666,260 S 8/2012 Cynn
8,376,878 B2 2/2013 Bennett et al.
D688,341 S 6/2013 Rollinson
D688,339 S 8/2013 Hilton et al.
D691,226 S 10/2013 Hilton et al.
D699,308 S 2/2014 Rollinson
D704,782 S 5/2014 Rollinson
8,721,472 B2 5/2014 Kuan et al.
8,790,193 B2 7/2014 Serrano et al.
D711,483 S 8/2014 Wong
D715,388 S * 10/2014 Serrano D21/743
D722,350 S 2/2015 Schweigert
D722,351 S * 2/2015 Parsons D21/736
D722,352 S 2/2015 Nicolette et al.
D723,120 S 2/2015 Nicolette
D724,164 S 3/2015 Schweigert et al.
D725,208 S * 3/2015 Schweigert D21/743
D726,265 S 4/2015 Nicolette
D726,846 S * 4/2015 Schweigert D21/743
D730,462 S 5/2015 Becktor
D732,122 S 6/2015 Becktor
D732,618 S 6/2015 Becktor
D733,234 S 6/2015 Nicolette
D738,447 S 9/2015 Schweigert
D738,449 S * 9/2015 Schweigert D21/759
D739,487 S 9/2015 Schweigert
D741,426 S 10/2015 Schweigert
D748,213 S * 1/2016 Parsons D21/742
D748,215 S * 1/2016 Parsons D21/759
9,233,283 B2 1/2016 Schweigert
D750,186 S * 2/2016 Schweigert D21/746
D753,252 S * 4/2016 Schweigert D21/759
9,440,124 B2 9/2016 Parsons et al.
D774,610 S * 12/2016 Serrano D21/744
D783,101 S * 4/2017 Schweigert D21/736
D793,502 S * 8/2017 Cardani D21/743
D796,602 S * 9/2017 Serrano D21/743
D796,604 S * 9/2017 Serrano D21/744
D796,605 S * 9/2017 Serrano D21/744
D801,458 S * 10/2017 Rollinson D21/742
D815,703 S * 4/2018 Schweigert D21/736
D823,410 S * 7/2018 Parsons D21/759
D827,064 S * 8/2018 Wypych D21/743
D831,766 S * 10/2018 Schweigert D21/743
2007/0142122 A1 6/2007 Bonneau
2007/0207875 A1 * 9/2007 Kuan A63B 53/0487 473/324
2007/0238548 A1 10/2007 Johnson
2008/0139333 A1 6/2008 Klein
2008/0146372 A1 6/2008 John
2008/0176672 A1 7/2008 Roach et al.
2009/0029800 A1 * 1/2009 Jones A63B 53/04 473/346
2009/0105008 A1 * 4/2009 Kuan A63B 53/0487 473/340
2011/0165959 A1 7/2011 Klein
2013/0165256 A1 6/2013 Stevenson
2013/0210537 A1 8/2013 Ainscough et al.

FOREIGN PATENT DOCUMENTS

JP 2005/160691 A 6/2005

OTHER PUBLICATIONS

U.S. Appl. No. 29/523,587, Schweigert, "Golf Club Head," filed Apr. 10, 2015.
TourSpecGolf (Gold's Factory Multi Weighted Custom Putter) [online]. Nov. 20, 2010. [retrieved Apr. 21, 2016]. Retrieved from the internet: <URL: http://www.tourspecgolf.com/blog/golds-factory-multi-weighted-custom-putter/>.

* cited by examiner

Primary Examiner — Mitchell I. Siegel

(57) **CLAIM**

The ornamental design for a golf club head, as shown and described.

DESCRIPTION

FIG. **1** is a top perspective view of a golf club head;
FIG. **2** is a bottom perspective view of the golf club head of FIG. **1**;
FIG. **3** is a front elevational view of the golf club head of FIG. **1**;
FIG. **4** is a rear elevational view of the golf club head of FIG. **1**;
FIG. **5** is a top view of the golf club head of FIG. **1**;
FIG. **6** is a bottom view of the golf club head of FIG. **1**;
FIG. **7** is a left side view of the golf club head of FIG. **1**;
FIG. **8** is a right side view of the golf club head of FIG. **1**;
FIG. **9** is a top perspective view of a second embodiment of a golf club head;
FIG. **10** is a bottom perspective view of the golf club head of FIG. **9**;
FIG. **11** is a front elevational view of the golf club head of FIG. **9**;
FIG. **12** is a rear elevational view of the golf club head of FIG. **9**;
FIG. **13** is a top view of the golf club head of FIG. **9**;
FIG. **14** is a bottom view of the golf club head of FIG. **9**;
FIG. **15** is a left side view of the golf club head of FIG. **9**;

FIG. **16** is a right side view of the golf club head of FIG. **9**;
FIG. **17** is a top perspective view of a third embodiment of a golf club head;
FIG. **18** is a bottom perspective view of the golf club head of FIG. **17**;
FIG. **19** is a front elevational view of the golf club head of FIG. **17**;
FIG. **20** is a rear elevational view of the golf club head of FIG. **17**;
FIG. **21** is a top view of the golf club head of FIG. **17**;
FIG. **22** is a bottom view of the golf club head of FIG. **17**;
FIG. **23** is a left side view of the golf club head of FIG. **17**; and,
FIG. **24** is a right side view of the golf club head of FIG. **17**.
The broken lines disclosed on the drawing views are included for the purpose of illustrating unclaimed subject matter and forms no part of the claimed design.

1 Claim, 24 Drawing Sheets

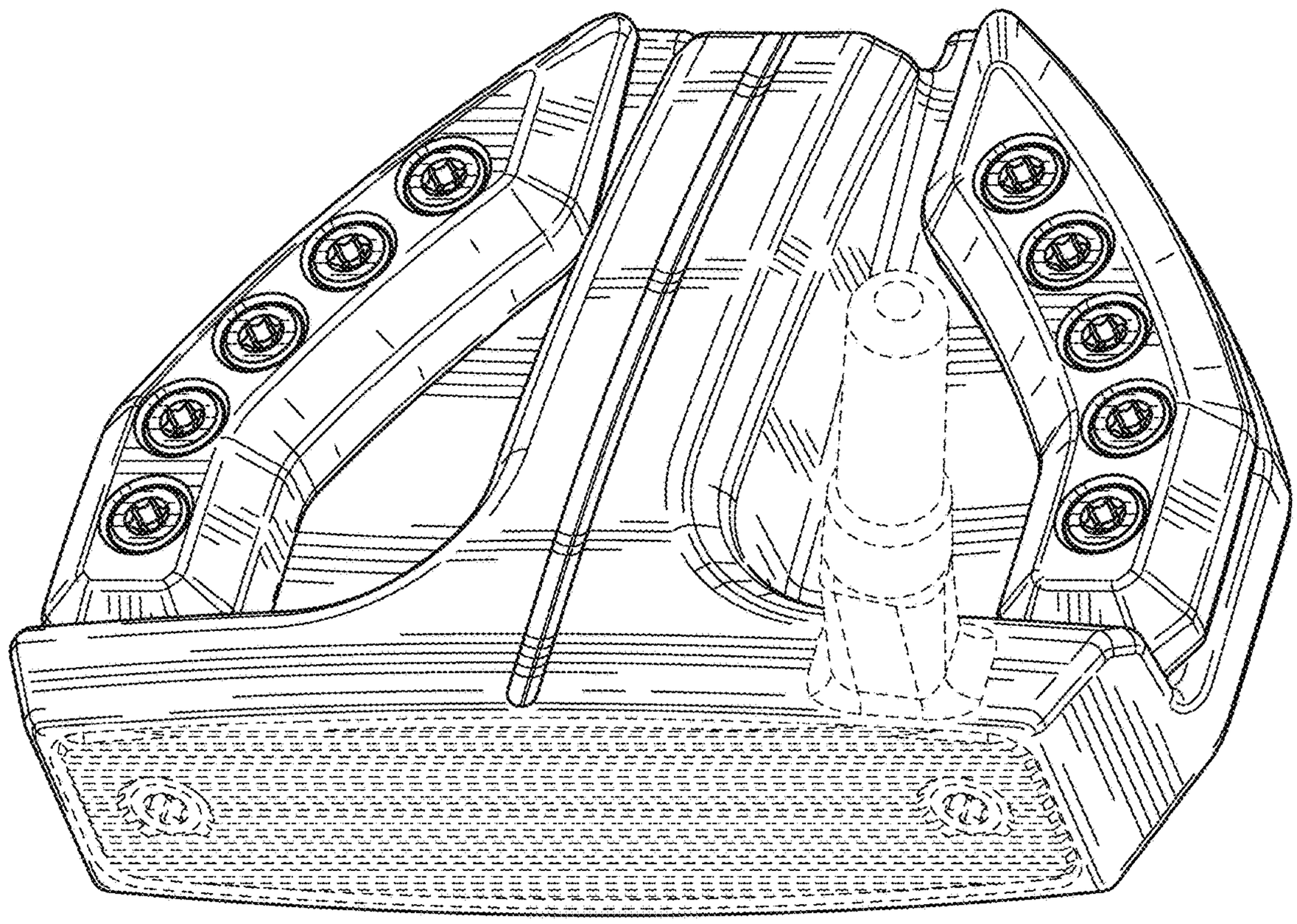

FIG. 1

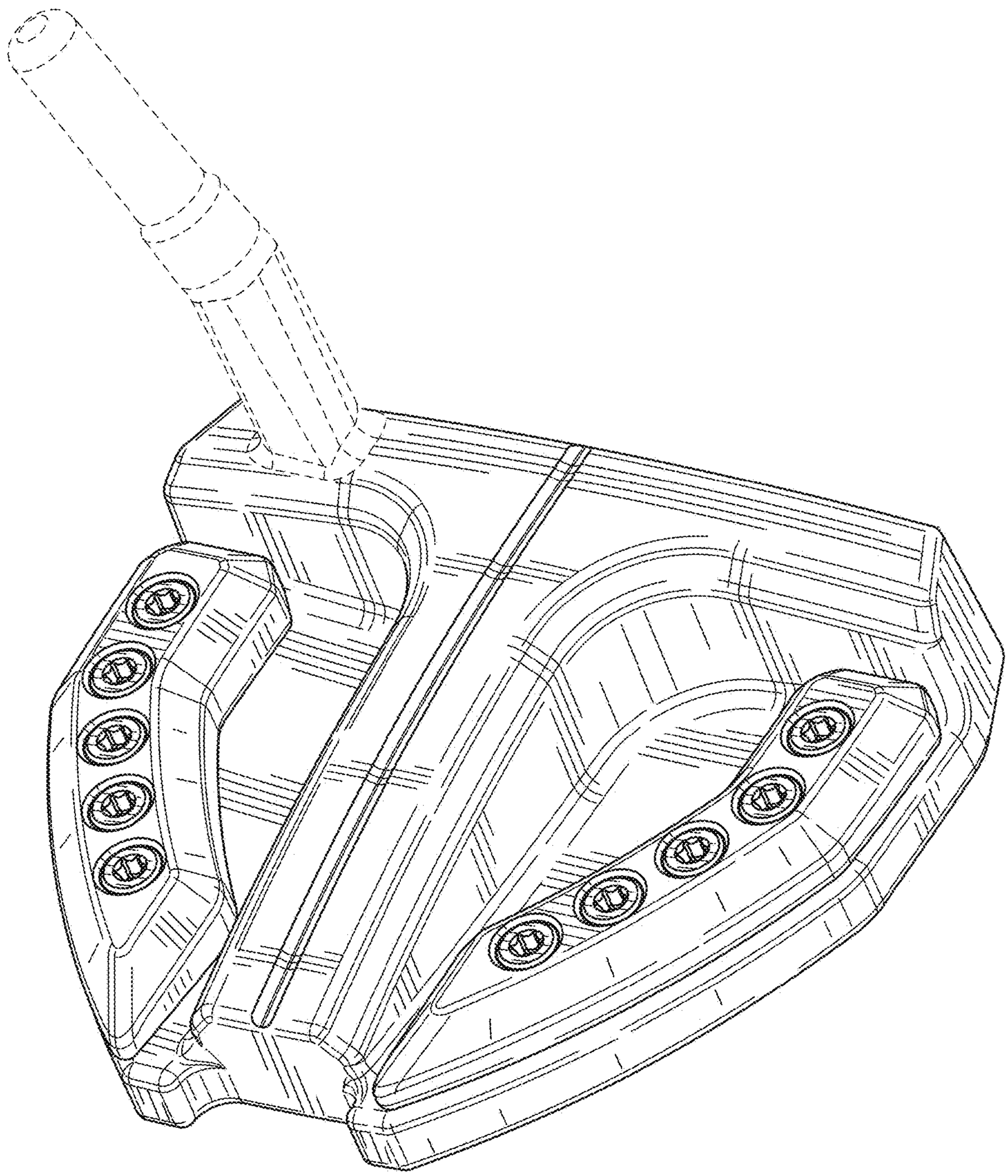

FIG. 2

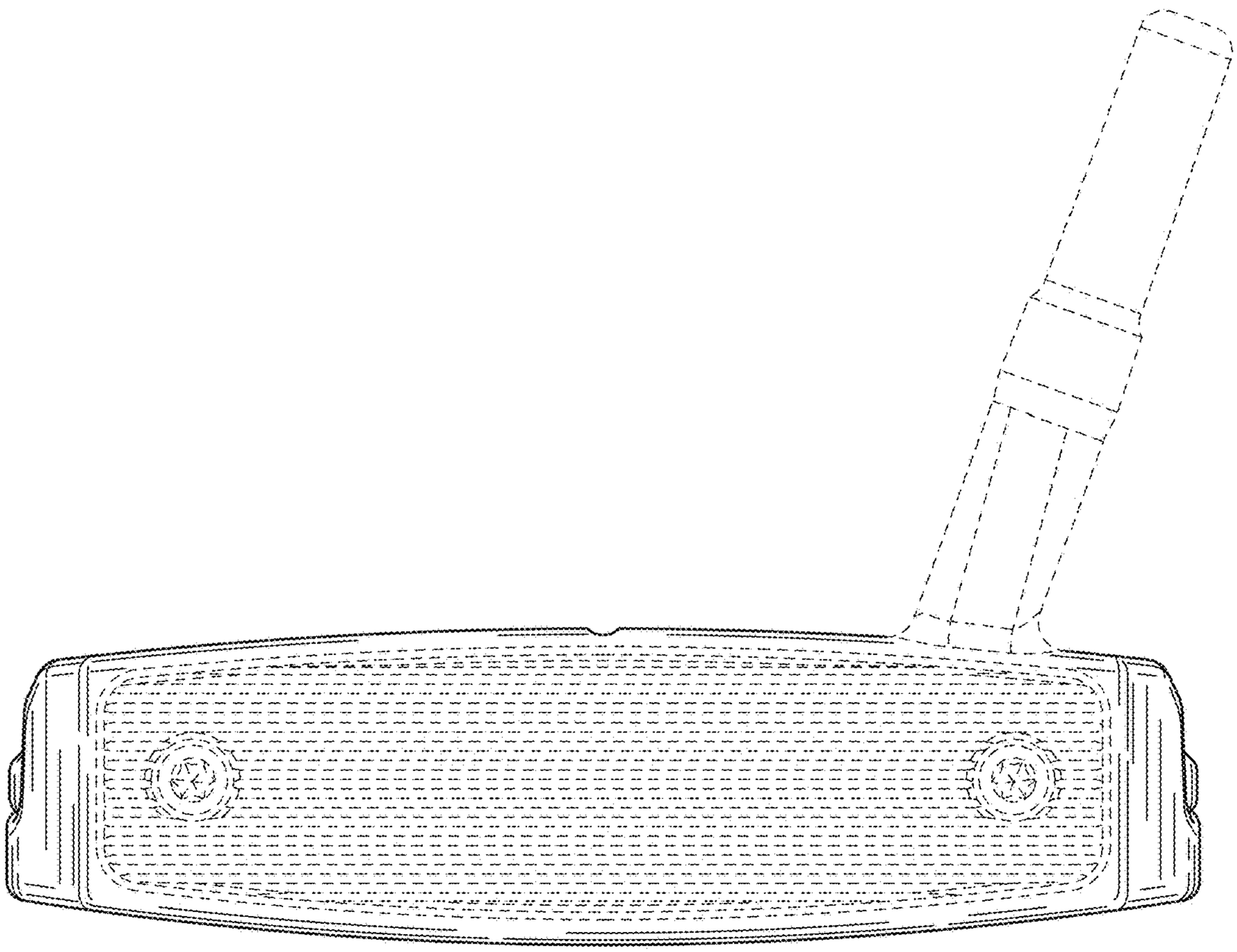

FIG. 3

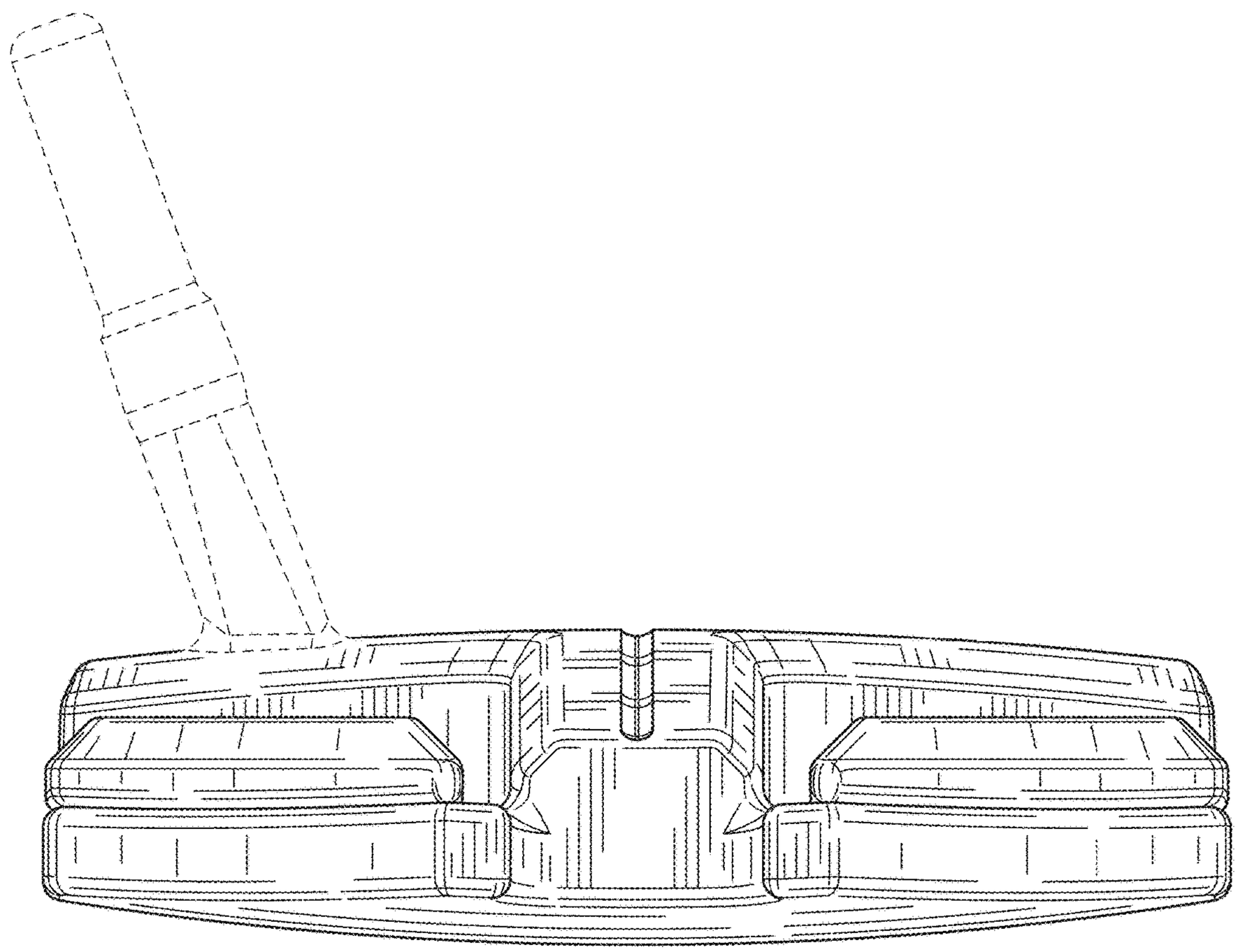

FIG. 4

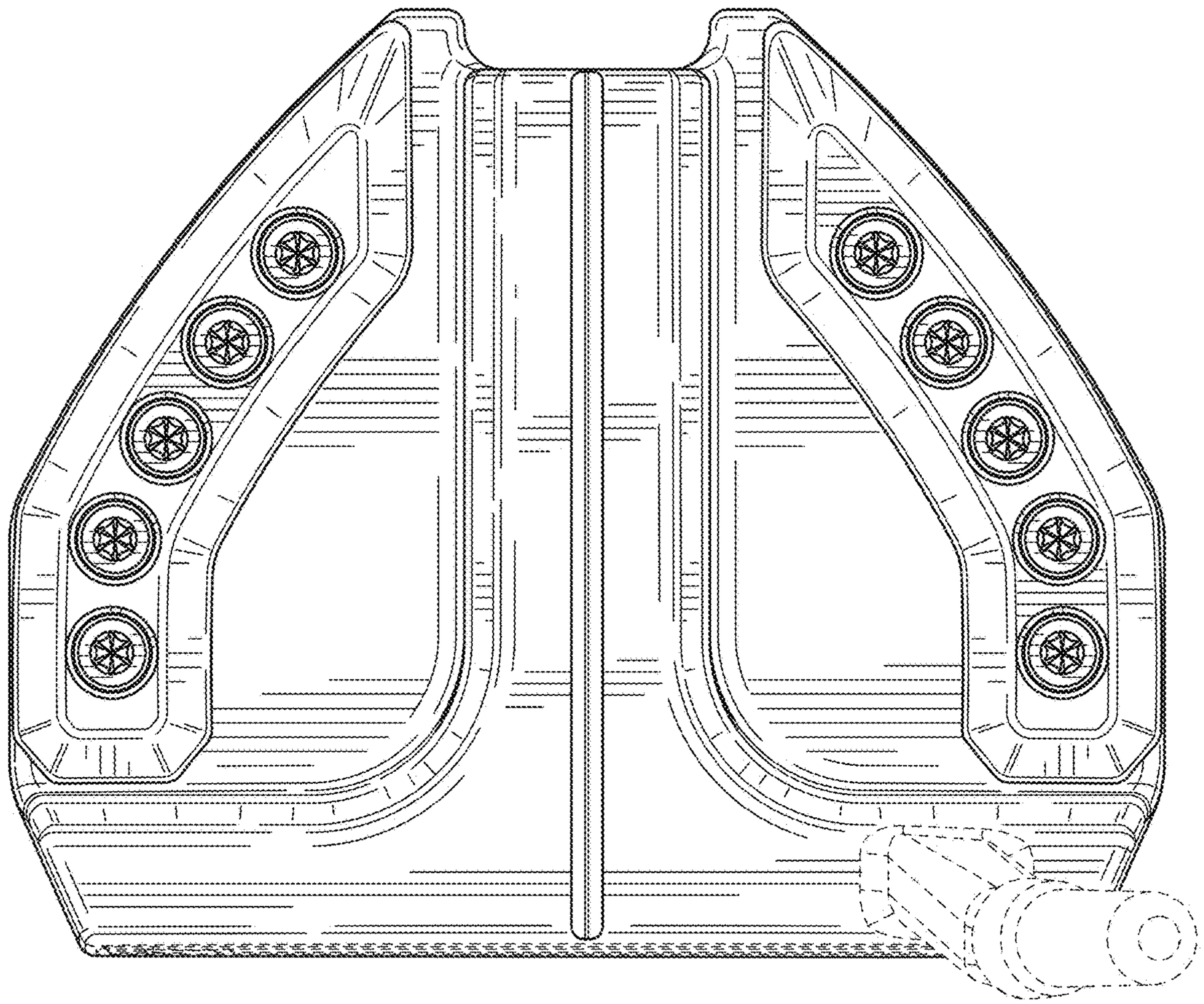

FIG. 5

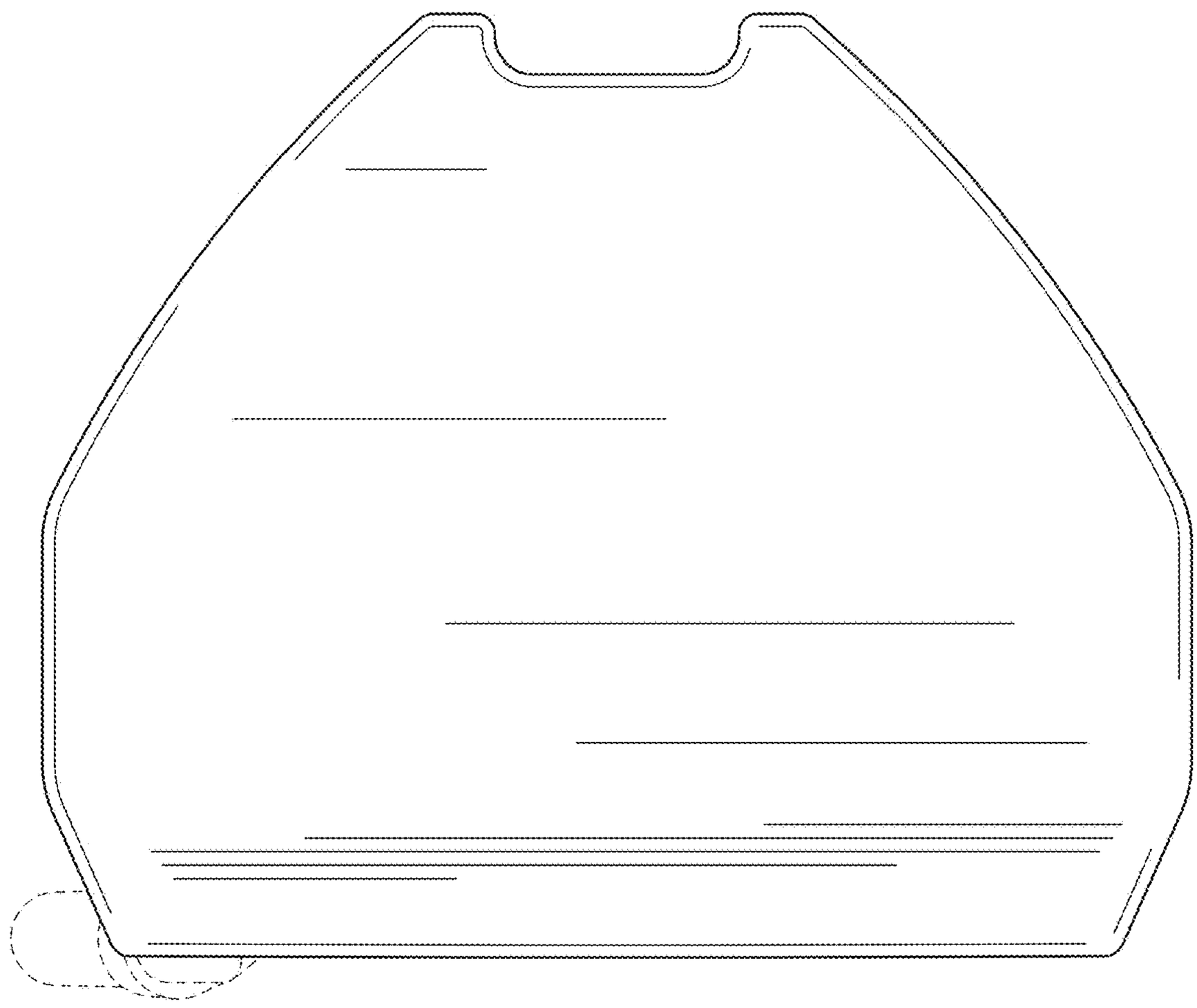

FIG. 6

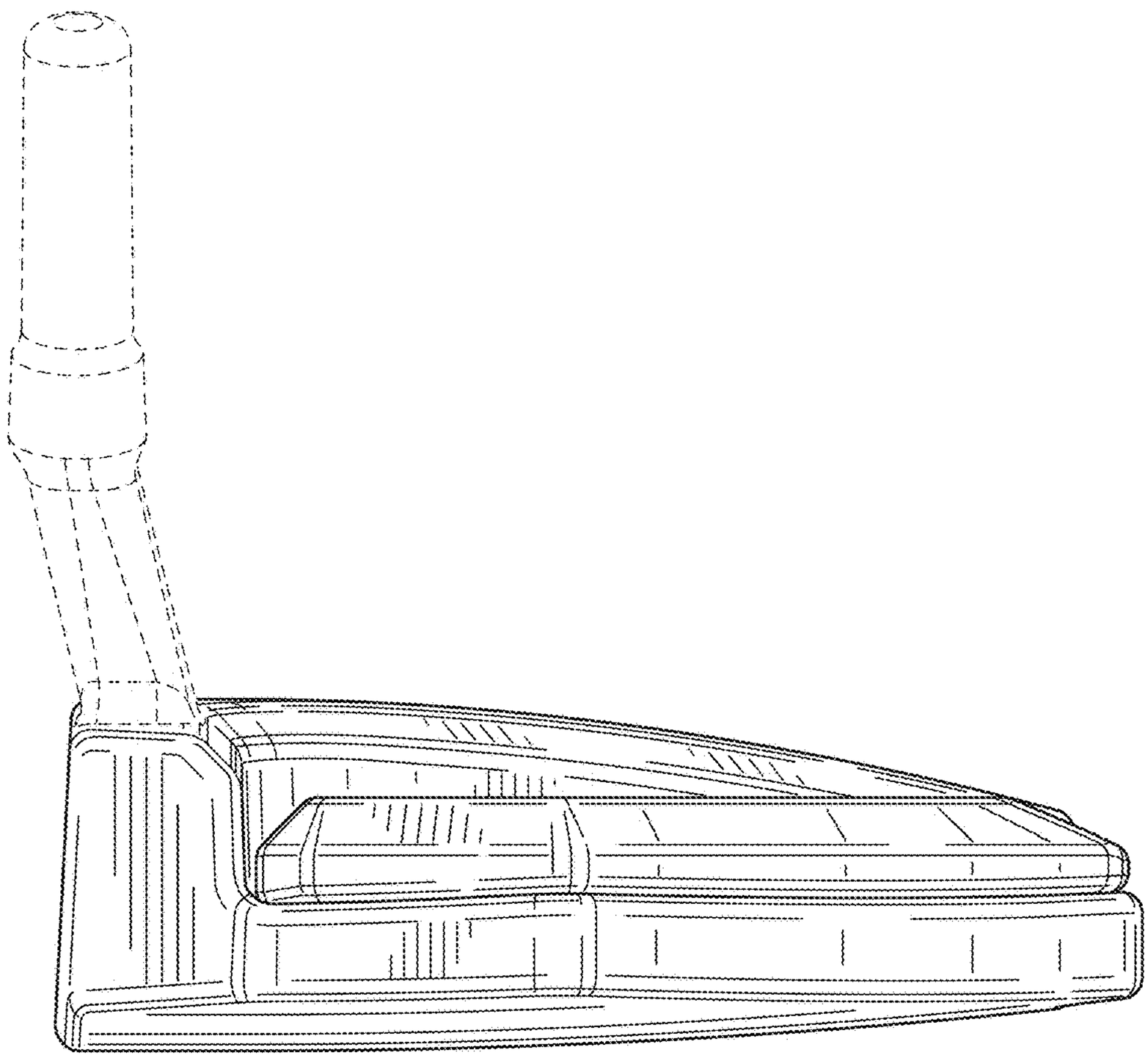

FIG. 7

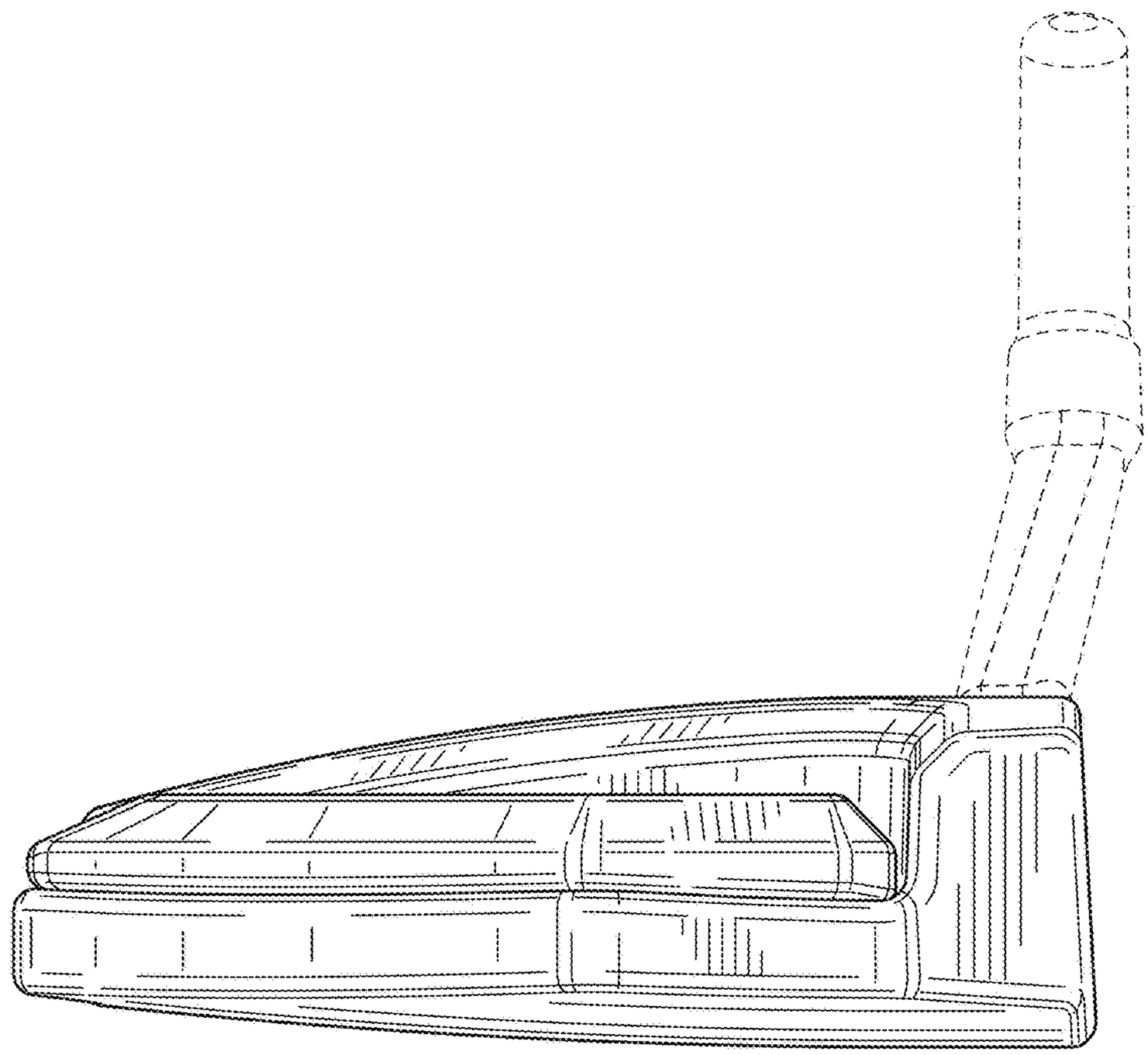

FIG. 8

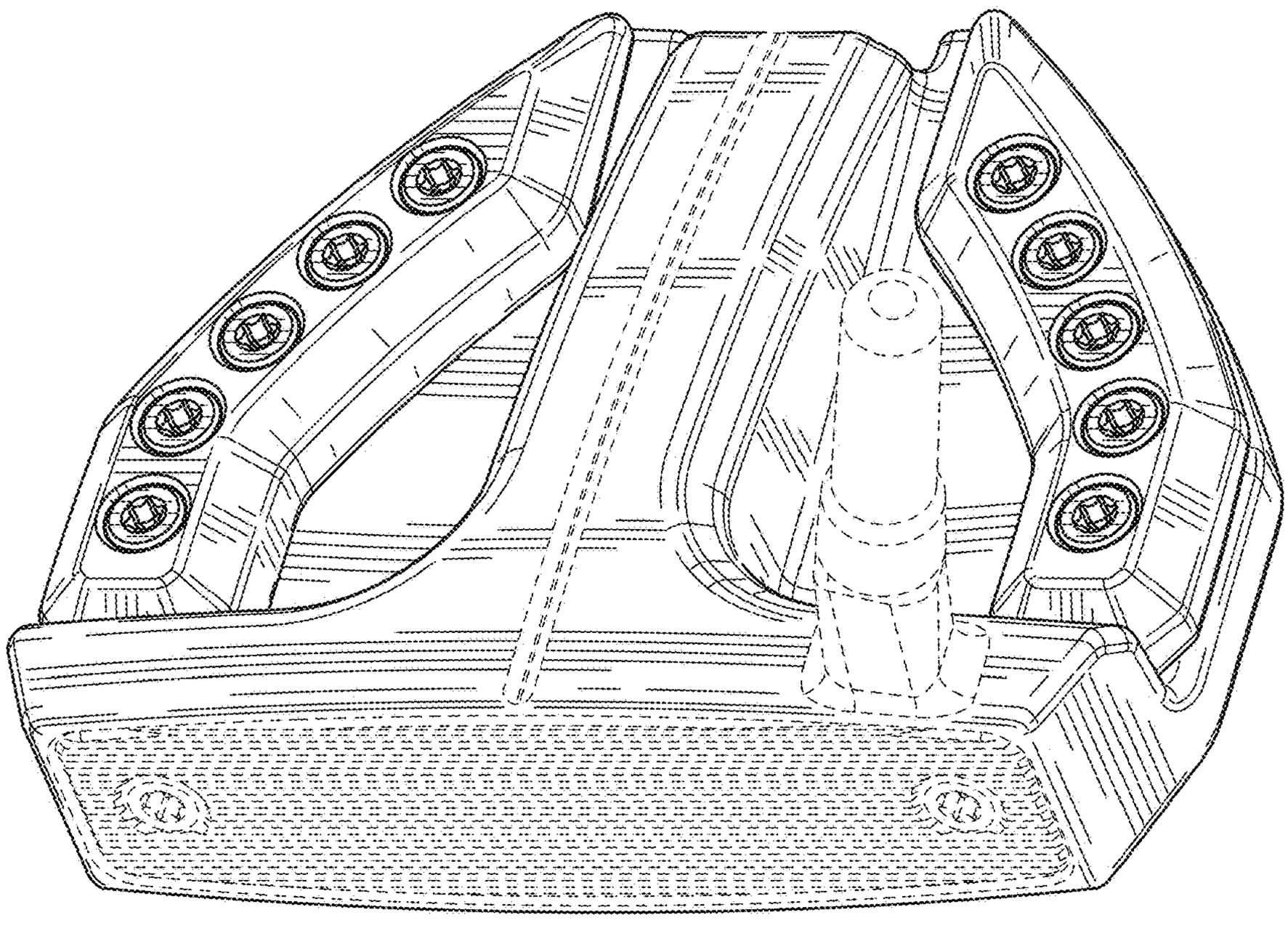

FIG. 9

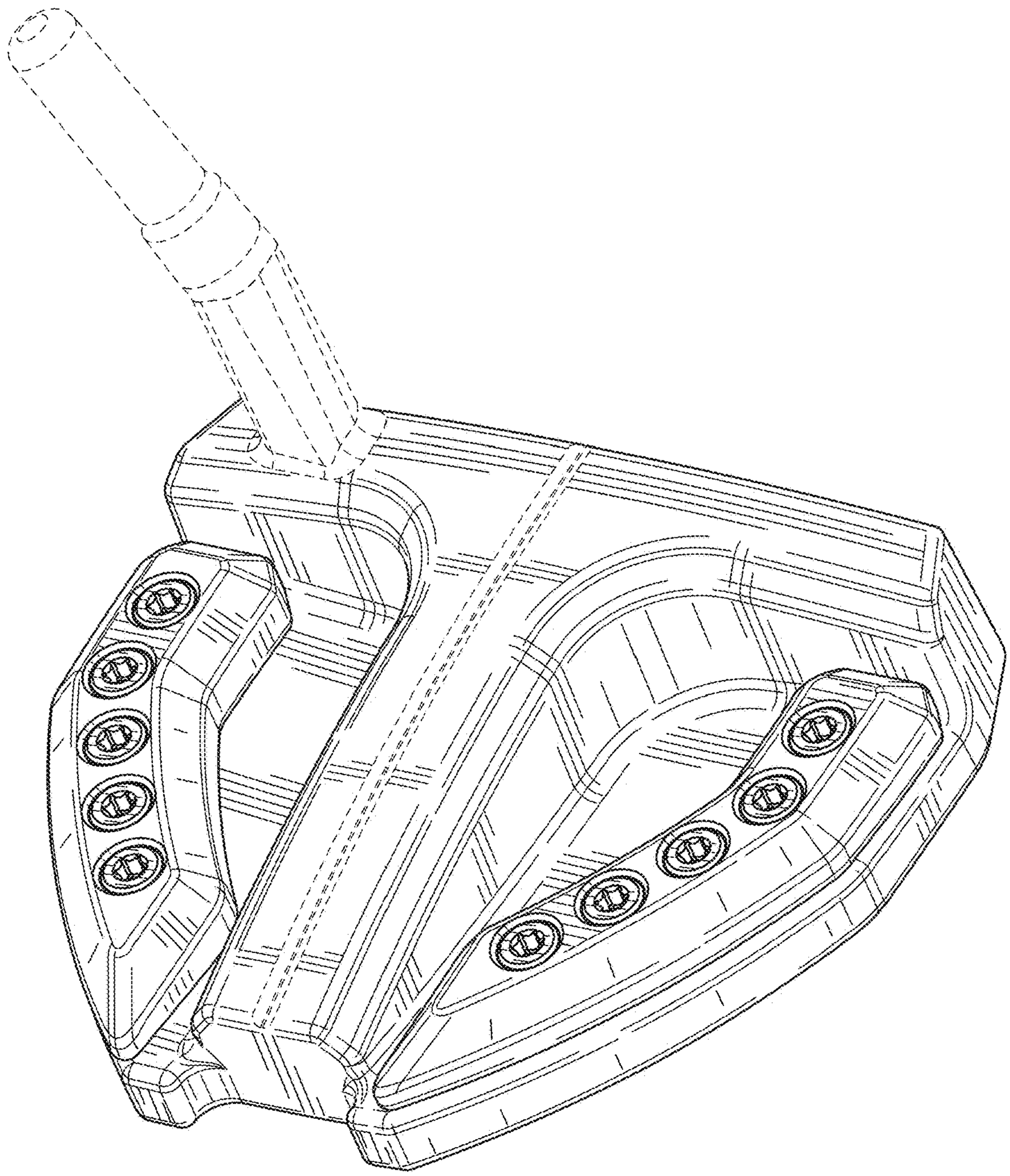

FIG. 10

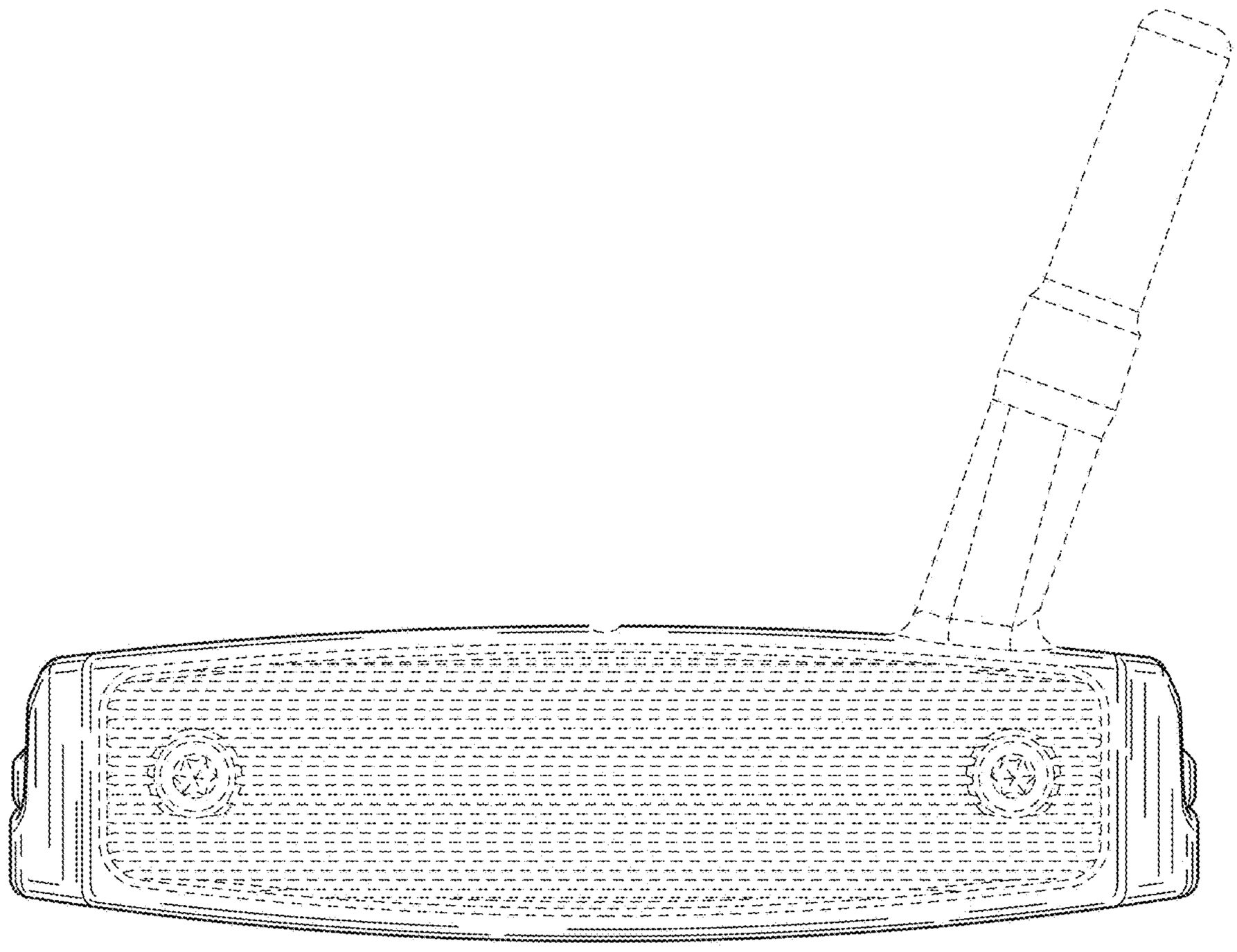

FIG. 11

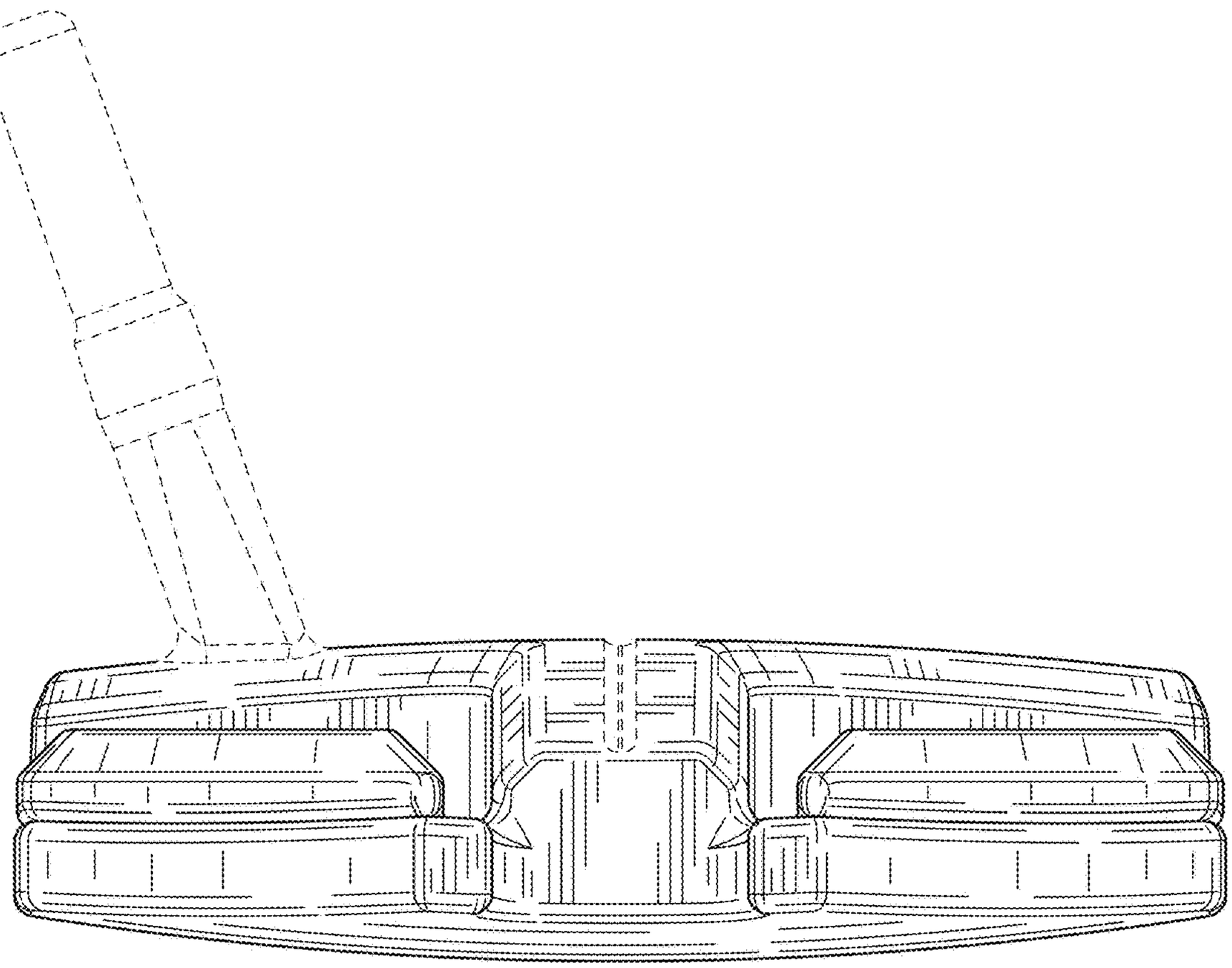

FIG. 12

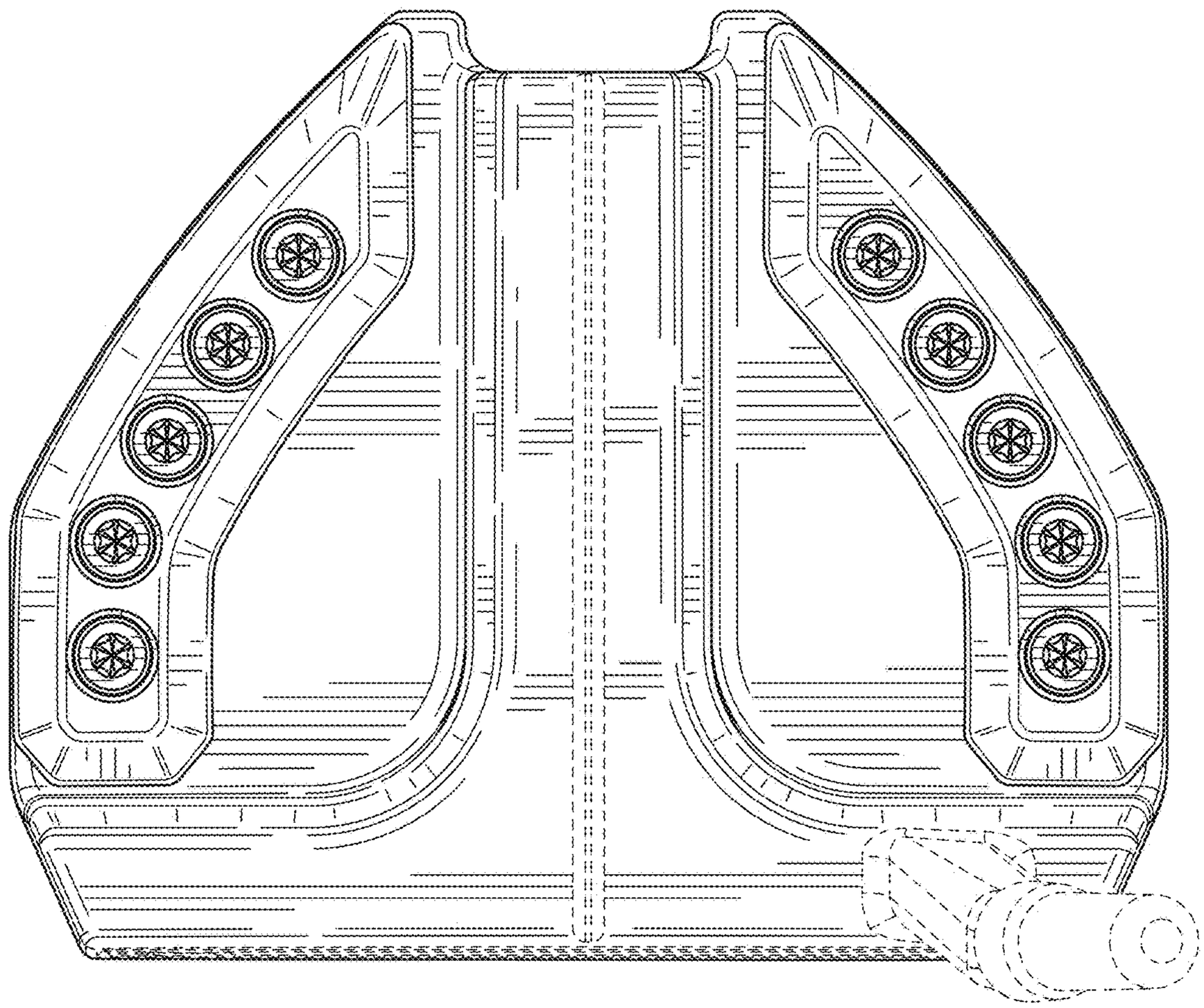

FIG. 13

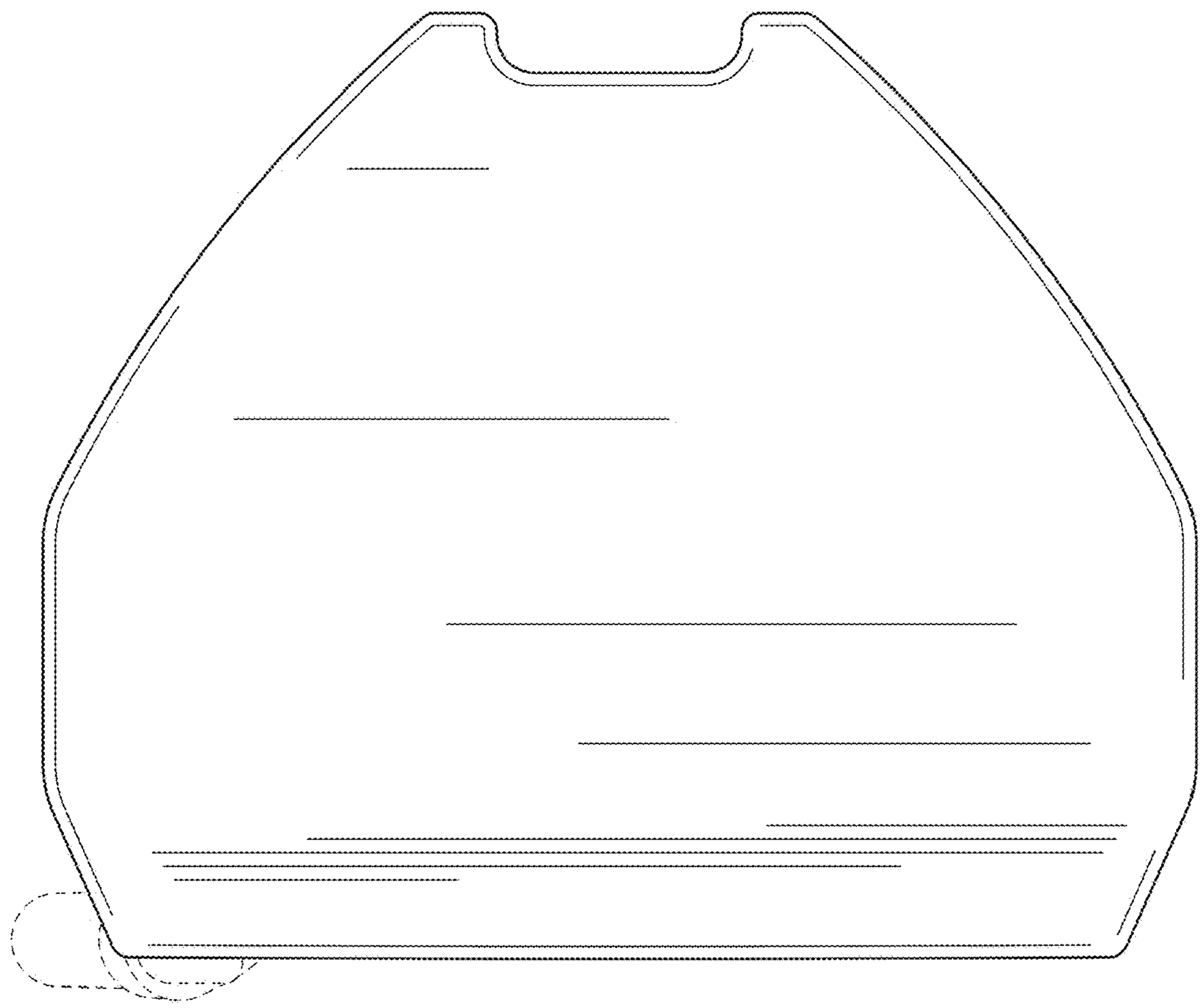

FIG. 14

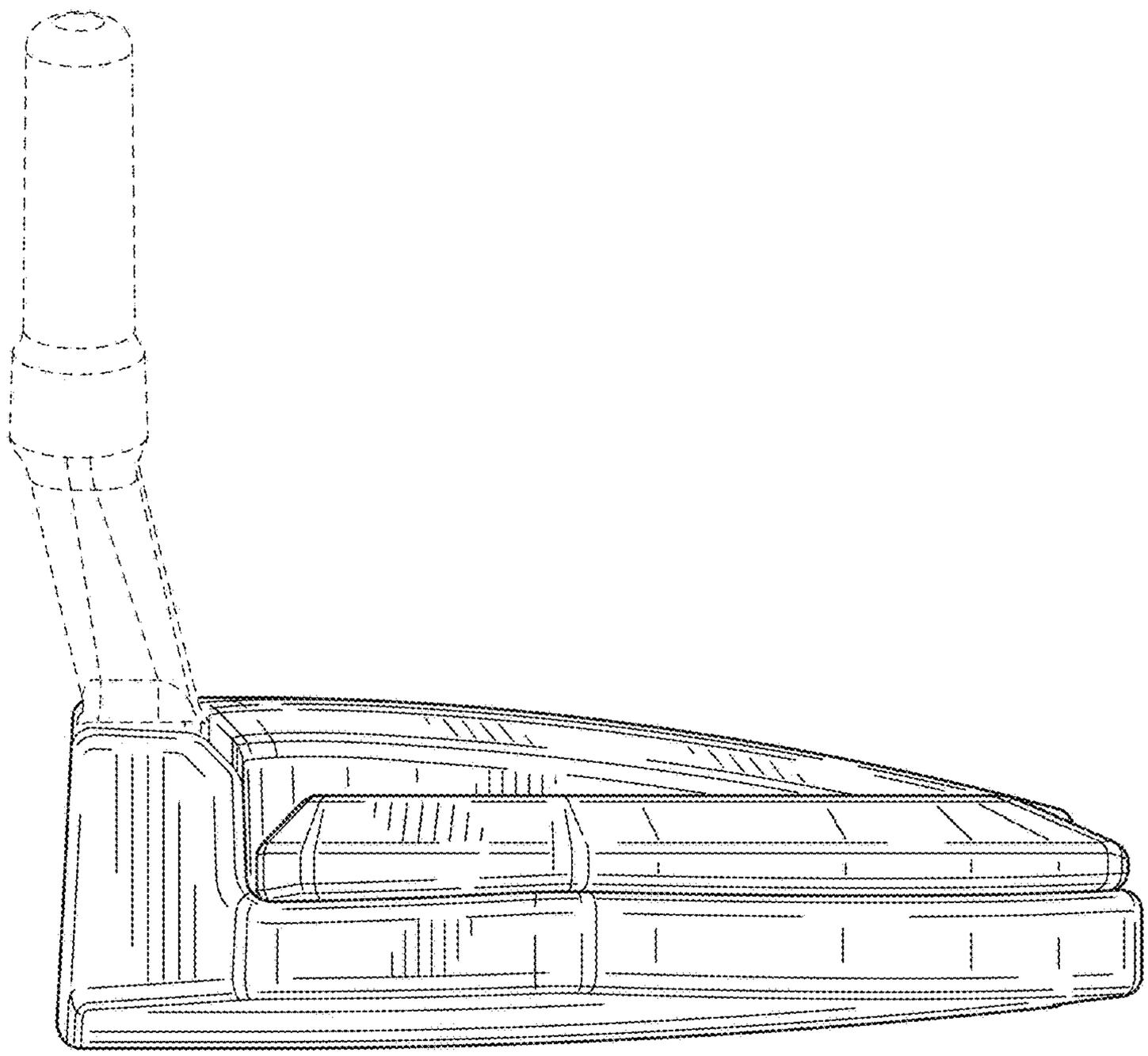

FIG. 15

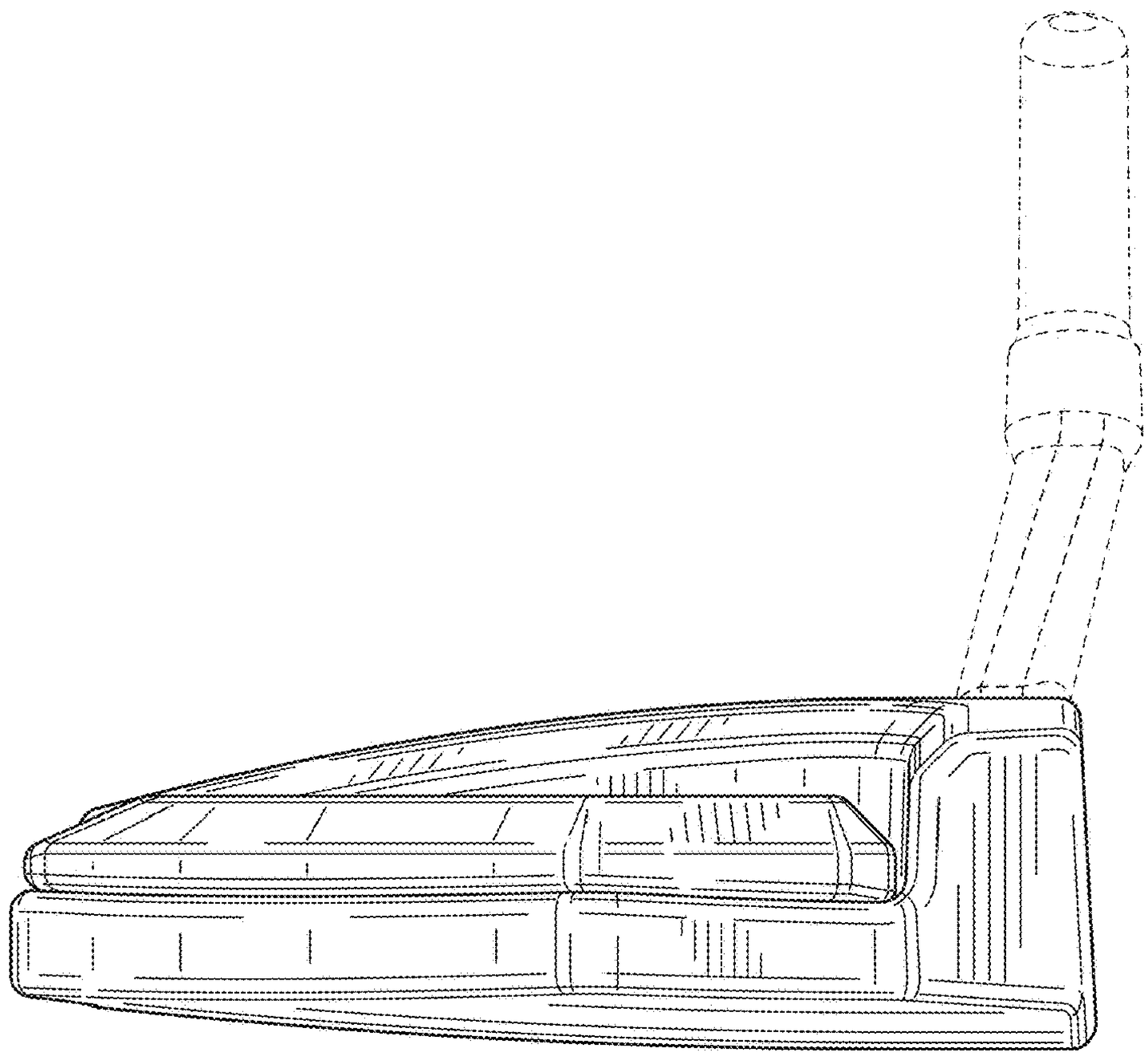

FIG. 16

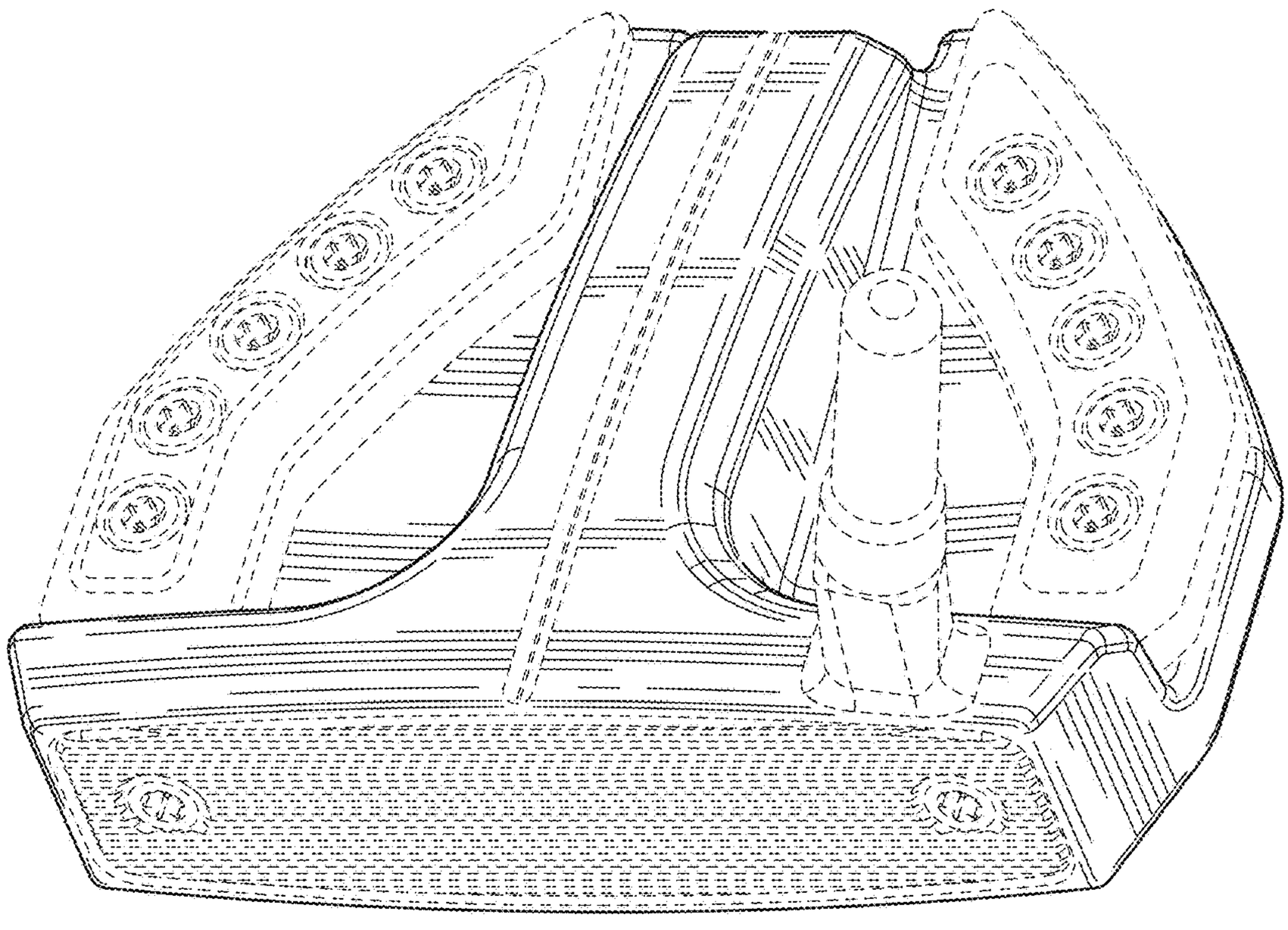

FIG. 17

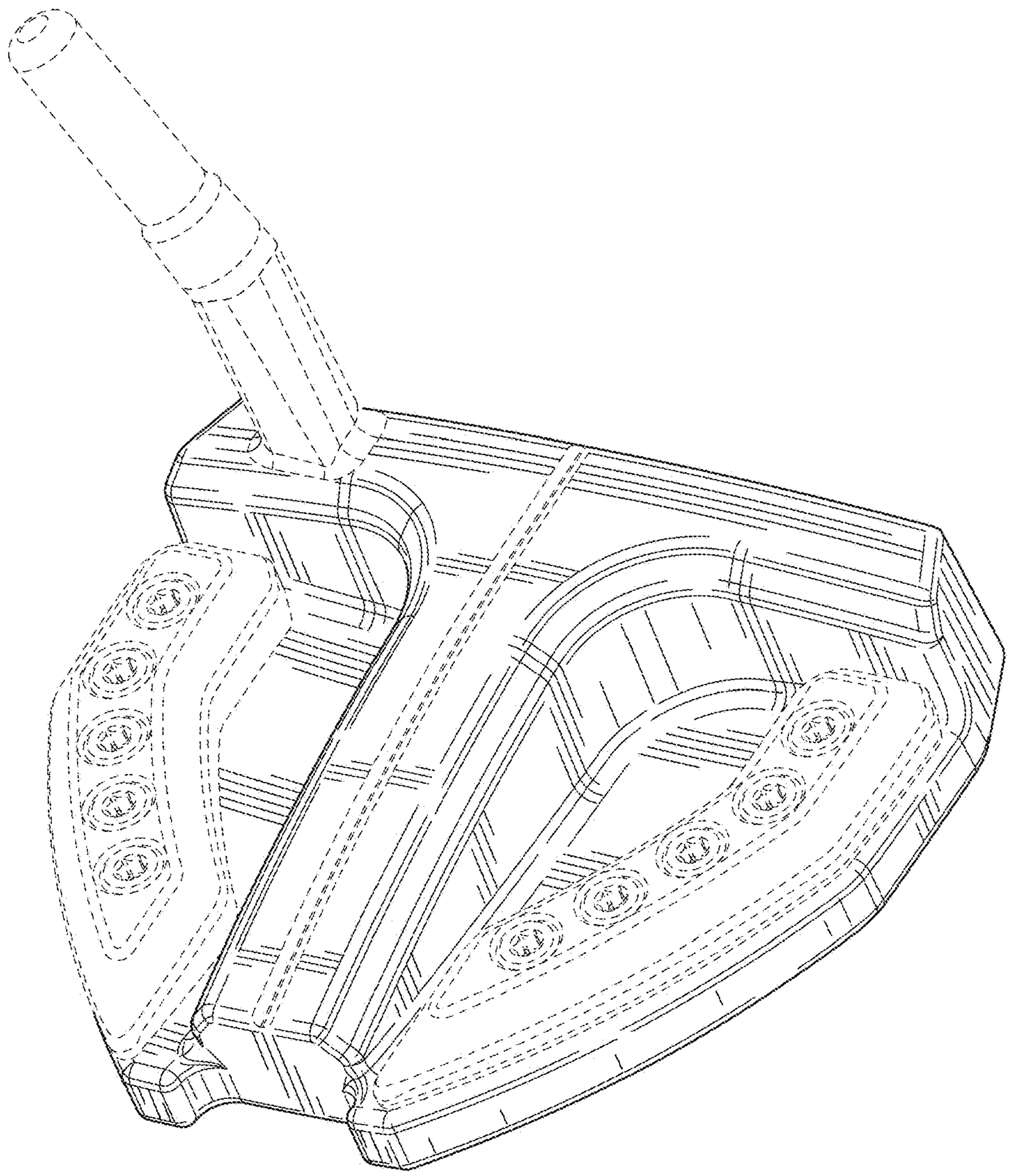

FIG. 18

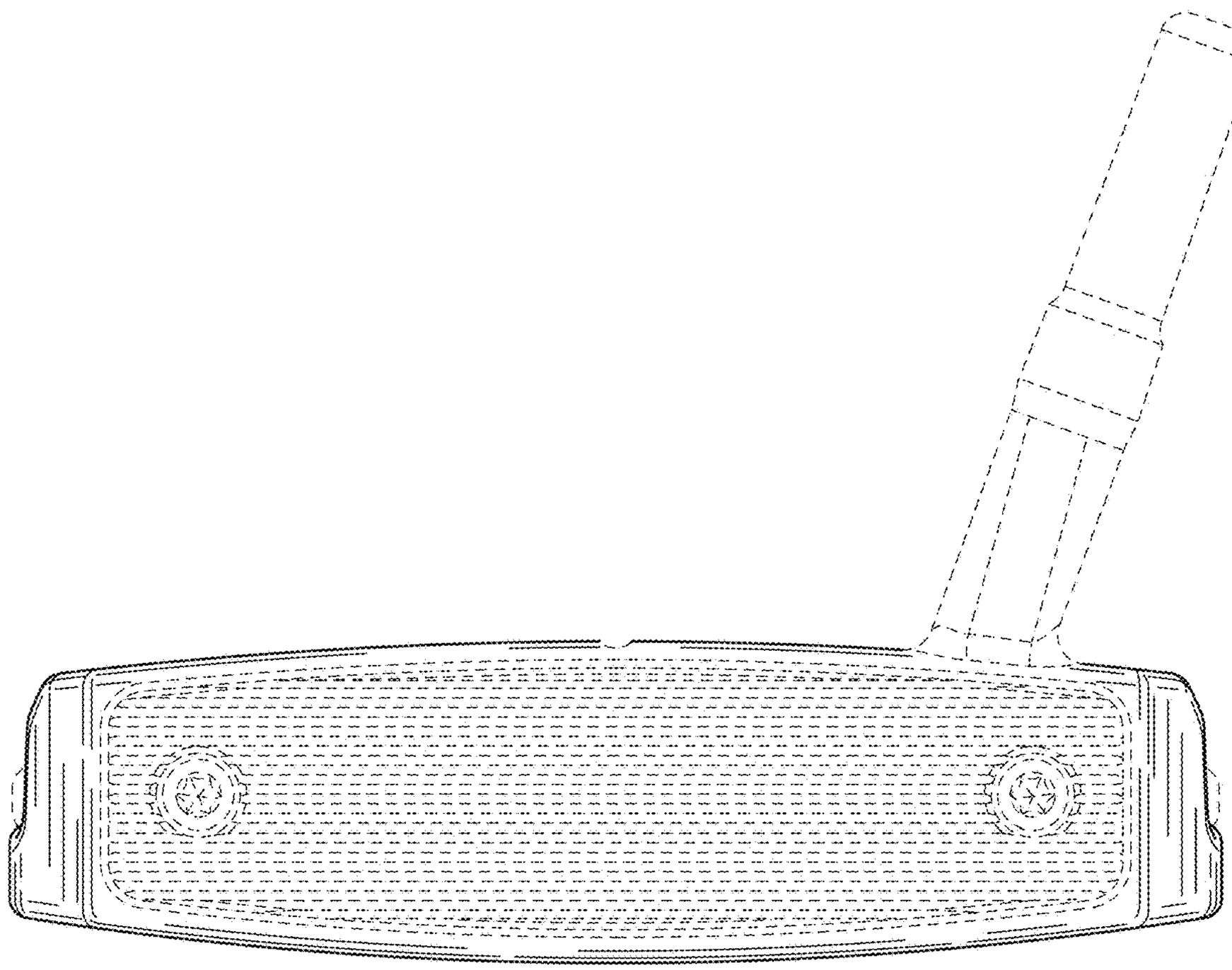

FIG. 19

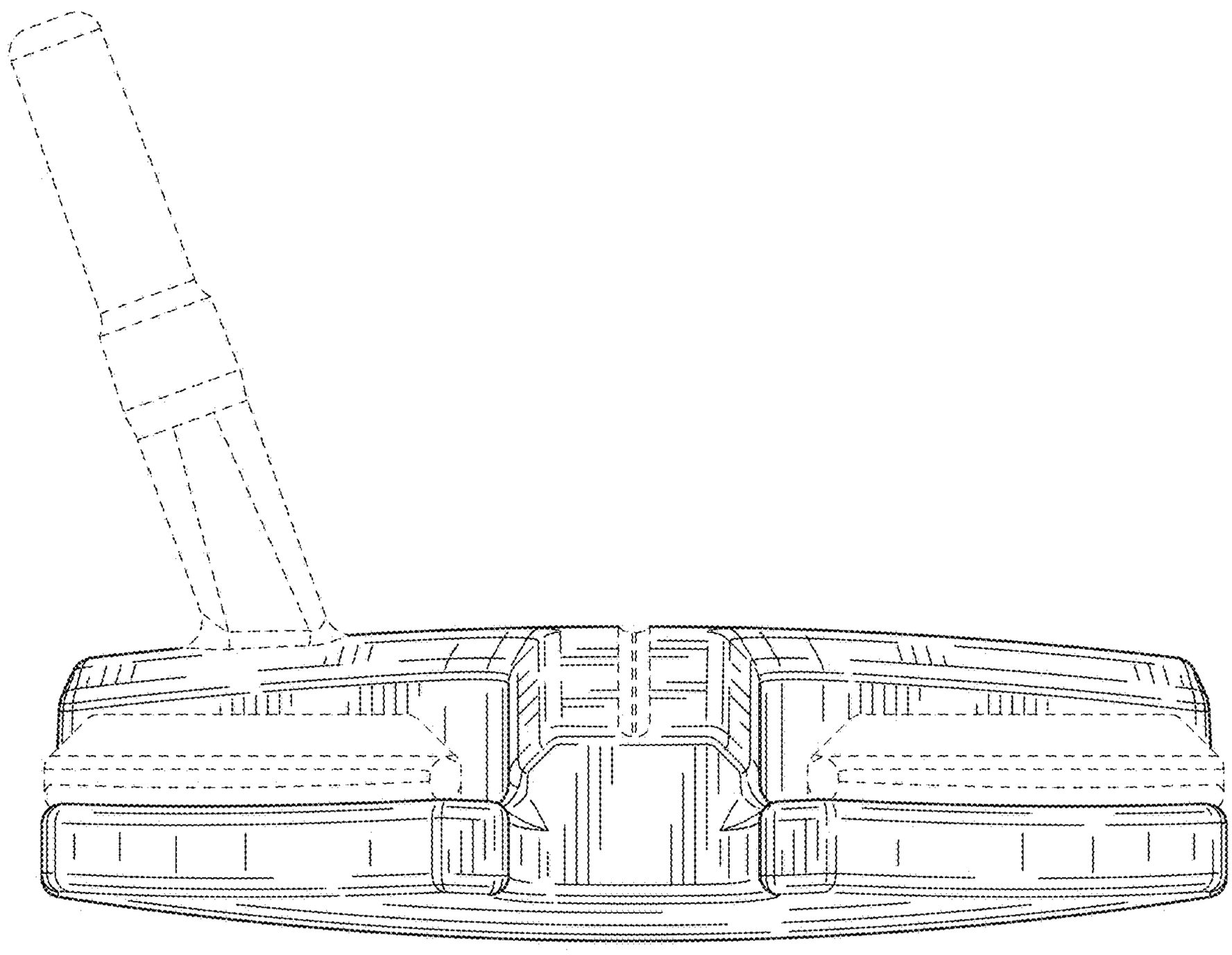

FIG. 20

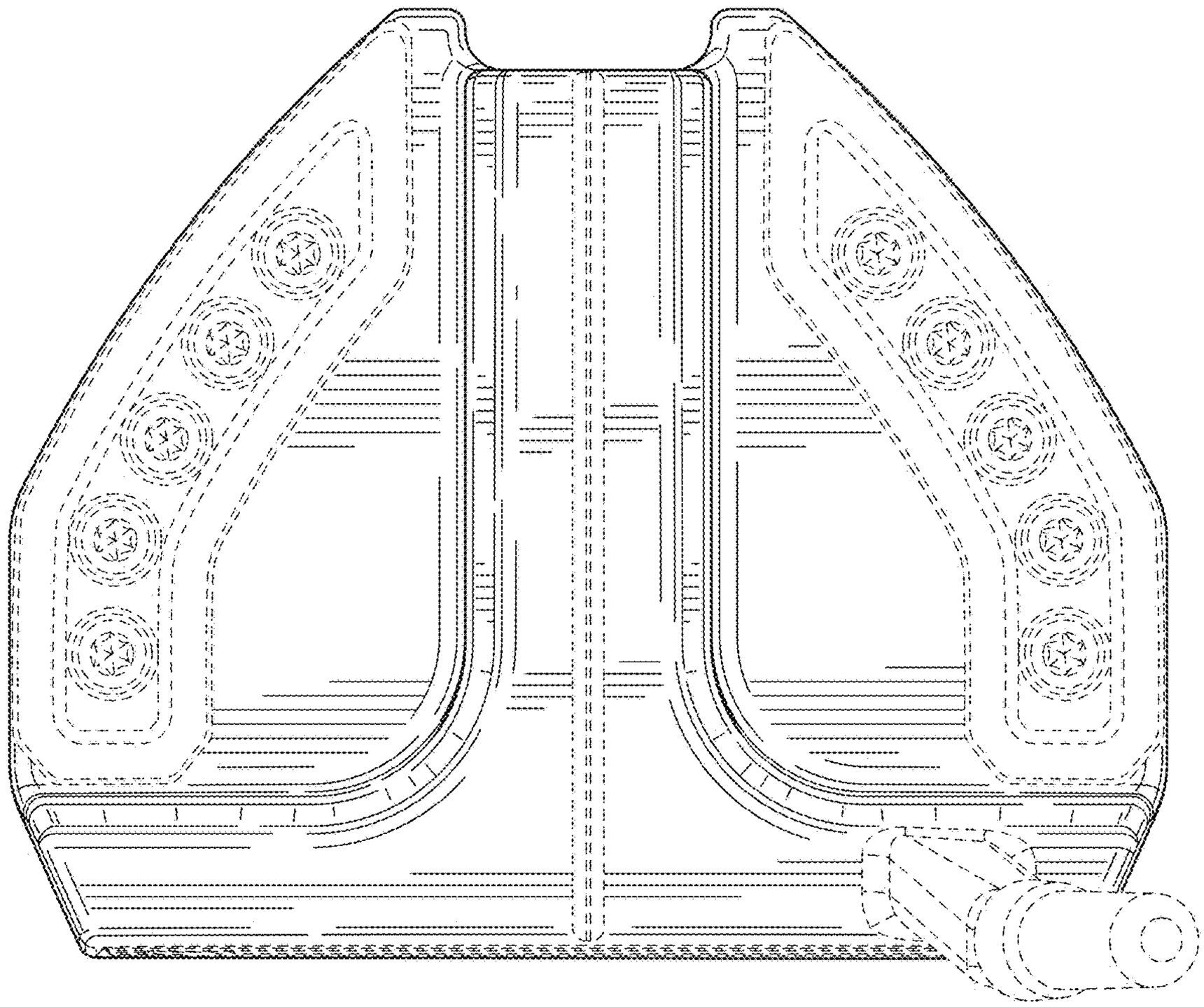

FIG. 21

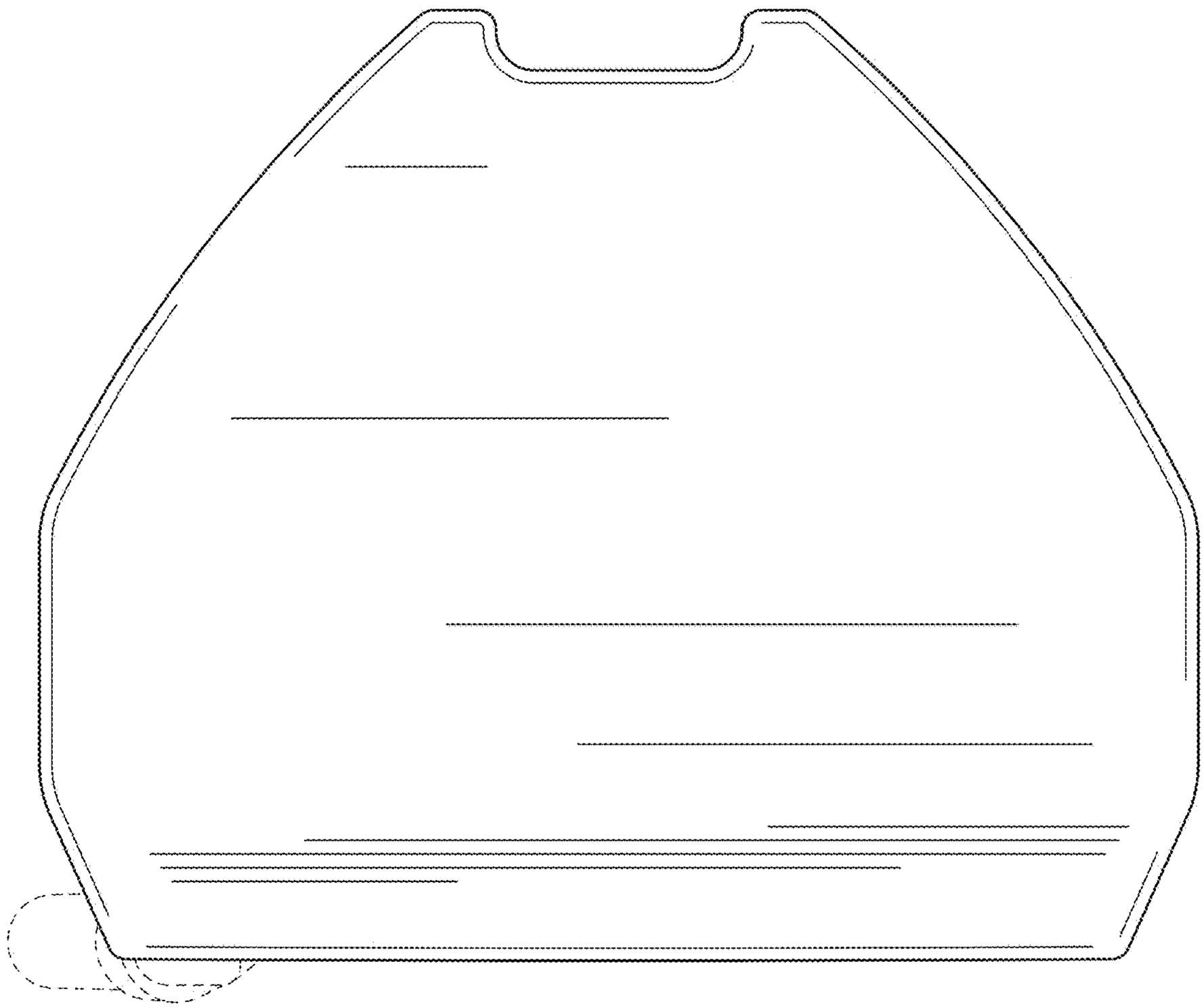

FIG. 22

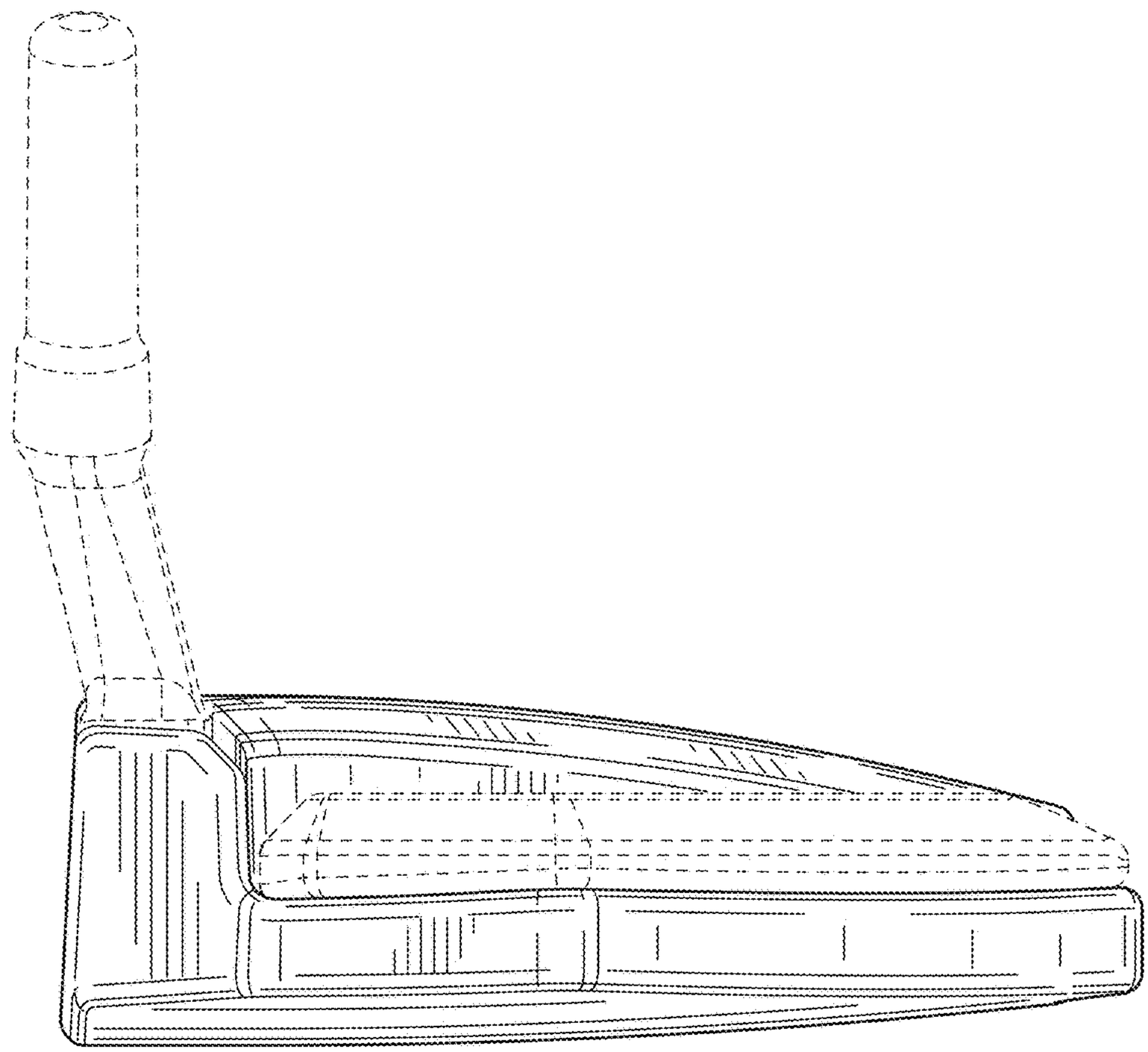

FIG. 23

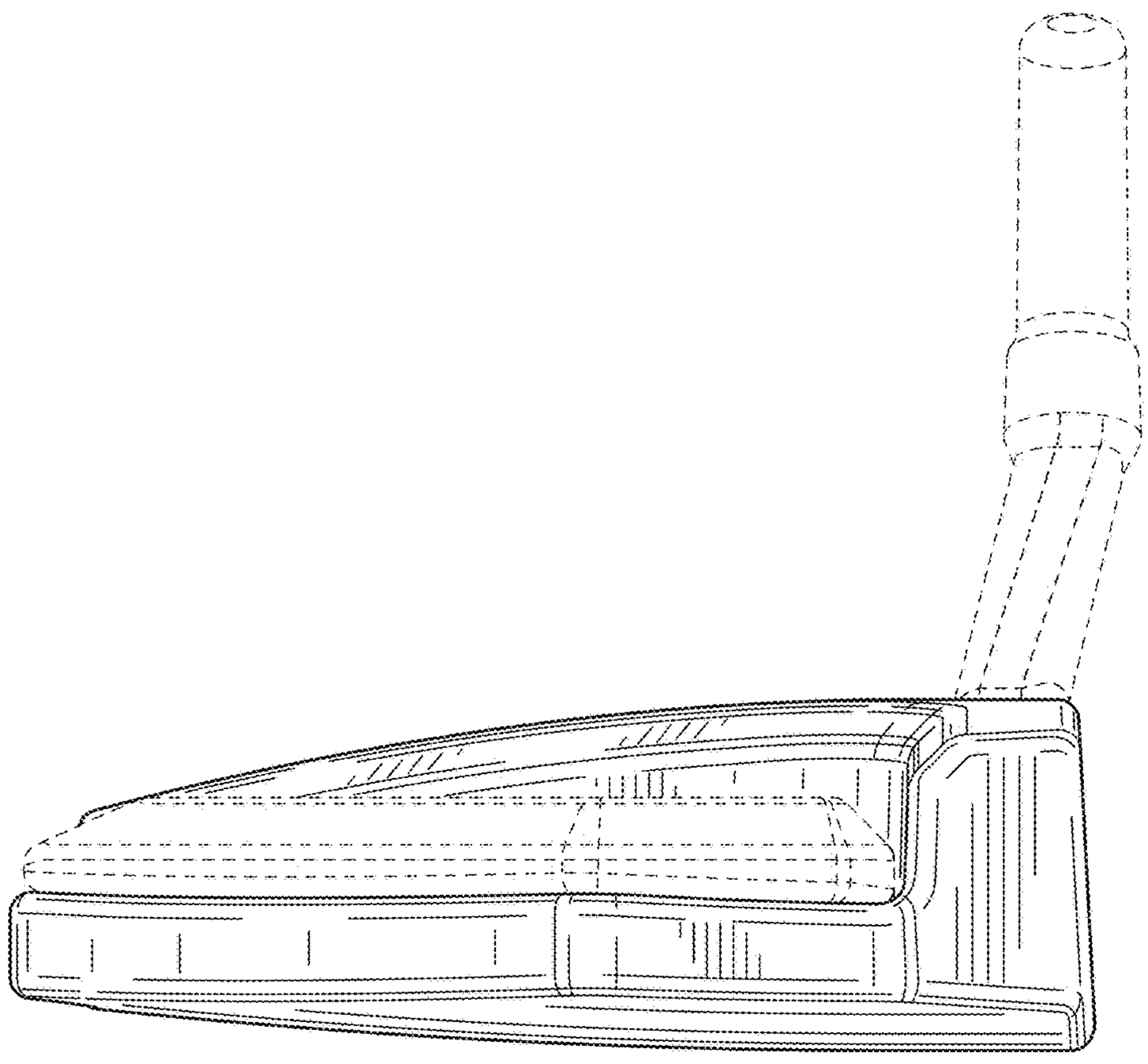

FIG. 24