US00D842822S

(12) United States Design Patent

Mira et al.

(10) Patent No.: US D842,822 S
(45) Date of Patent: ** Mar. 12, 2019

(54) **FLEXIBLE FOLDED FIN HEATSINK WITH STRAIGHT AND RADIAL FIN PATTERNS**

(71) Applicant: **HEATSCAPE.COM, INC.**, Morgan Hill, CA (US)

(72) Inventors: **Ali Mira**, Morgan Hill, CA (US); **Yashar Mira**, Morgan Hill, CA (US); **Michael Mira**, Morgan Hill, CA (US)

(73) Assignee: **HEATSCAPE.COM, INC.**, Morgan Hill, CA (US)

(**) Term: **15 Years**

(21) Appl. No.: **29/636,919**

(22) Filed: **Feb. 12, 2018**

Related U.S. Application Data

(62) Division of application No. 29/555,490, filed on Feb. 22, 2016, now Pat. No. Des. 810,034.

(51) **LOC (11) Cl.** **13-03**

(52) **U.S. Cl.**
USPC **D13/179**

(58) **Field of Classification Search**
USPC D13/179, 122, 182
CPC .. H05K 7/20; H05K 7/20172; H05K 7/20127; H05K 7/20336; H05K 7/20154; H05K 7/20272; H01L 23/34; H01L 23/3672; H01L 23/40; H01L 23/4006; H01L 23/4093; H01L 23/427; H01L 23/46; F28D 15/0275; F28D 1/0426; F28D 15/0208; F28D 15/04; F28F 1/30; F28F 2215/00; G06F 1/20
See application file for complete search history.

(56) **References Cited**

U.S. PATENT DOCUMENTS

D400,188 S * 10/1998 Chu D13/179
6,260,610 B1 * 7/2001 Biber H01L 21/4871 165/80.3
D481,017 S * 10/2003 Hsia D13/179
6,681,847 B1 * 1/2004 Lee B22F 7/062 165/185
D586,763 S * 2/2009 Hua D13/179
D638,376 S * 5/2011 Herrmann D13/179
D672,730 S * 12/2012 Lin D13/179
D698,740 S * 2/2014 Schubert D13/179
D717,745 S * 11/2014 Schubert D13/179
D747,278 S * 1/2016 Murphy D13/179
D755,740 S * 5/2016 Chen D13/179
(Continued)

OTHER PUBLICATIONS

AAVID Genie, "Folded Fin Heat Sinks: Putting All of Those Origami Skills to Work!", Posted Feb. 9, 2018. (https://www.aavidgenie.com/folded-tech-overview/) (Year: 2018).*
(Continued)

Primary Examiner — Jennifer Rivard
Assistant Examiner — April Rivas
(74) *Attorney, Agent, or Firm* — Kilpatrick Townsend & Stockton LLP

(57) **CLAIM**

The ornamental design for a flexible folded fin heatsink with straight and radial fin patterns, as shown and described.

DESCRIPTION

FIG. **1** is a top perspective view of a flexible folded fin heatsink with straight and radial fin patterns in a curved and extended configuration showing our new design;
FIG. **2** is a left side elevational view thereof;
FIG. **3** a right side elevational view thereof;
FIG. **4** is a rear elevational view thereof;
FIG. **5** is a front elevational view thereof;
FIG. **6** is a top plan view thereof; and,
FIG. **7** is a bottom plan view thereof.

1 Claim, 7 Drawing Sheets

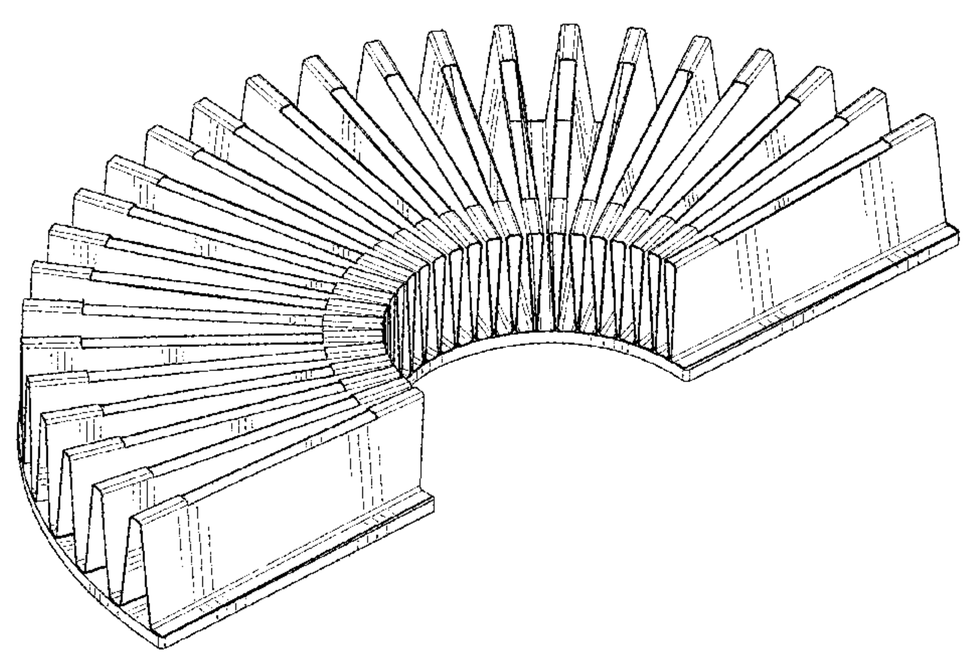

(56) **References Cited**

U.S. PATENT DOCUMENTS

2002/0093789	A1*	7/2002	Sloan	H01L 23/4093 361/679.54
2002/0105785	A1*	8/2002	Davis	H01L 23/4006 361/703
2002/0121365	A1*	9/2002	Kozyra	F28F 3/025 165/185
2002/0139833	A1*	10/2002	Armstrong	B23K 1/0012 228/248.1
2003/0155110	A1*	8/2003	Joshi	F28F 3/02 165/185
2005/0150633	A1*	7/2005	Lee	F28F 13/00 165/80.3
2005/0156013	A1*	7/2005	Bhatti	F28F 3/025 228/193
2008/0017360	A1*	1/2008	Campbell	F28F 1/32 165/148
2012/0147562	A1*	6/2012	Feng	F28D 15/0266 361/696
2013/0306273	A1*	11/2013	Iyengar	H01L 23/473 165/104.19
2014/0177166	A1*	6/2014	Nardi	H01L 23/3672 361/679.54
2016/0029517	A1*	1/2016	Kim	H05K 7/20409 361/710
2016/0341488	A1*	11/2016	Wan	F28D 15/0266
2017/0055370	A1*	2/2017	Tsai	H01L 23/473

OTHER PUBLICATIONS

Enertron, "Folded Fins", Accessed Oct. 10, 2018. (https://www.enertron-inc.com/folded-fins/) (Year: 2018).*

* cited by examiner

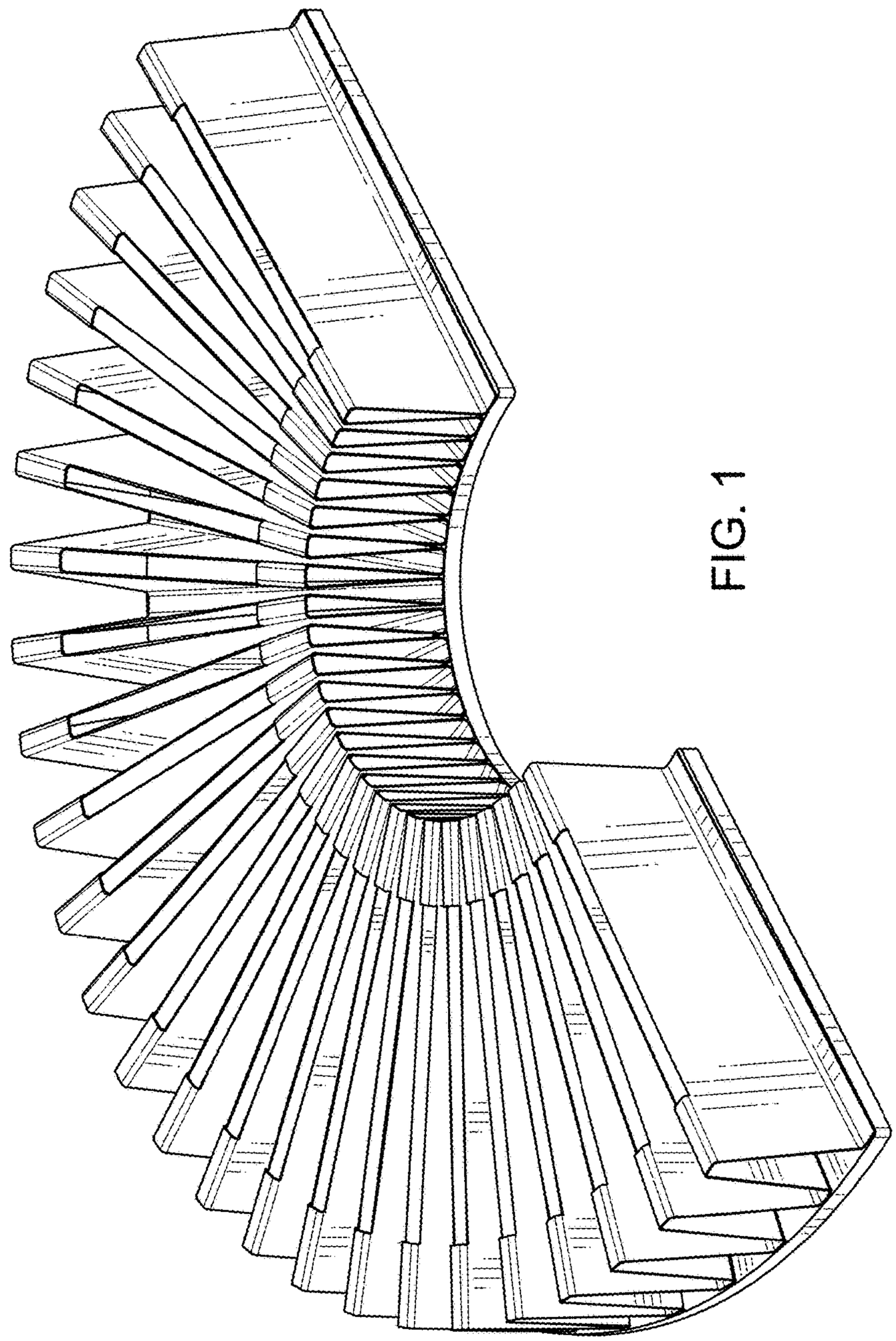

FIG. 1

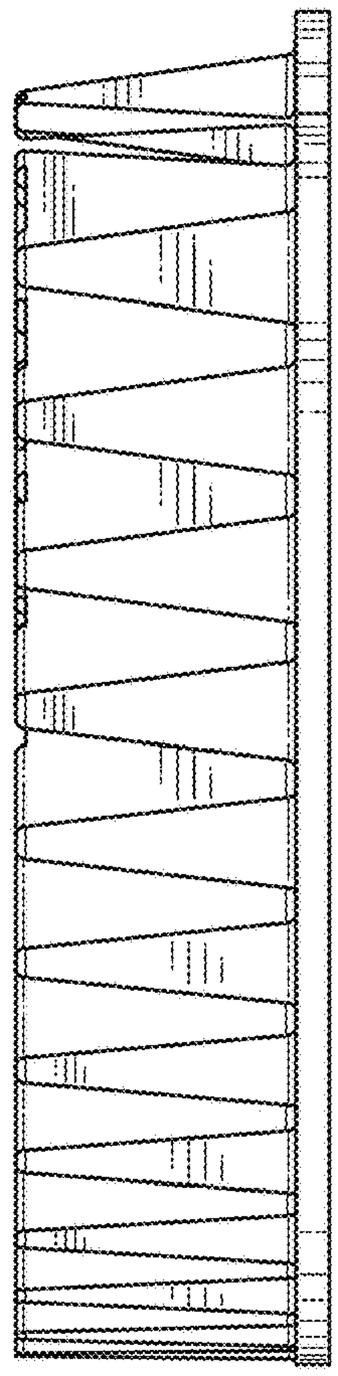

FIG. 2

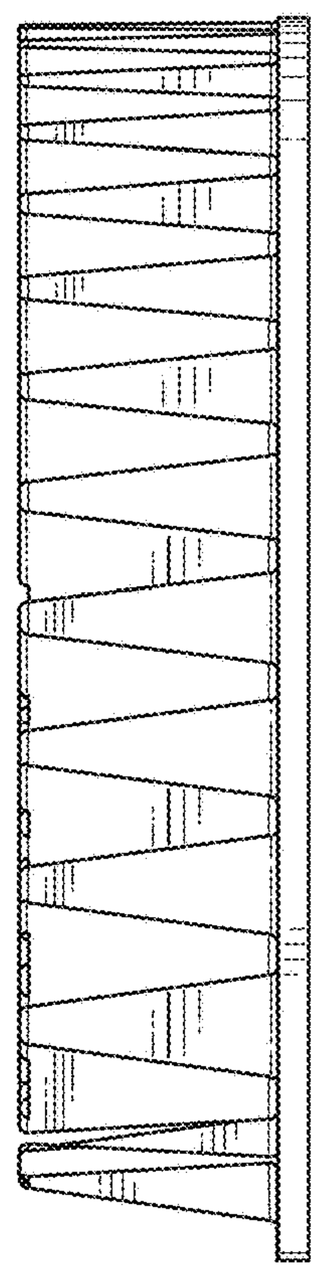

FIG. 3

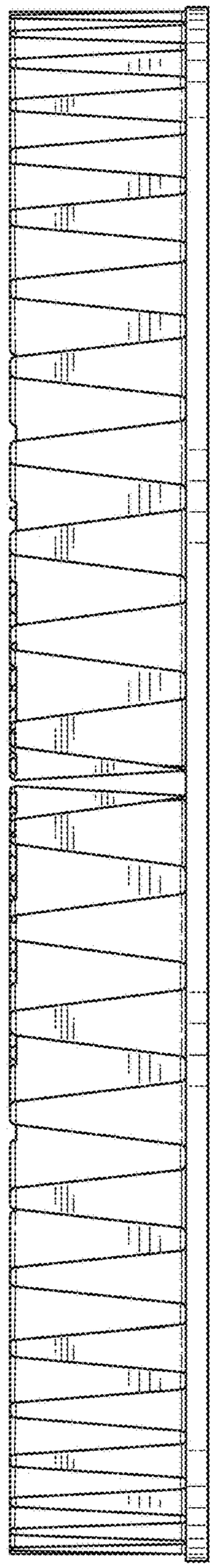

FIG. 4

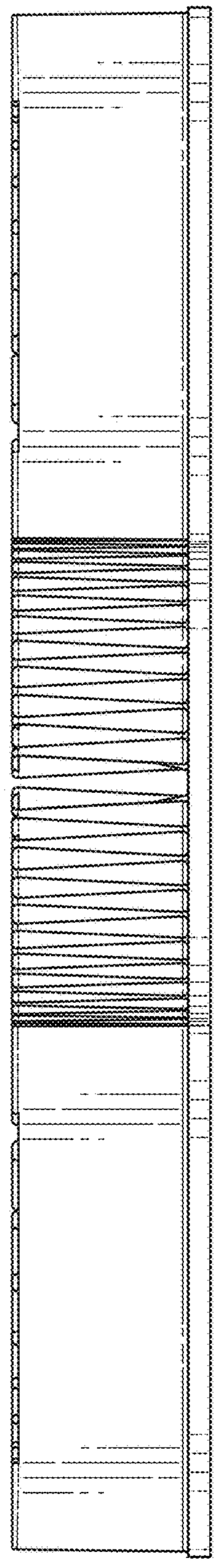

FIG. 5

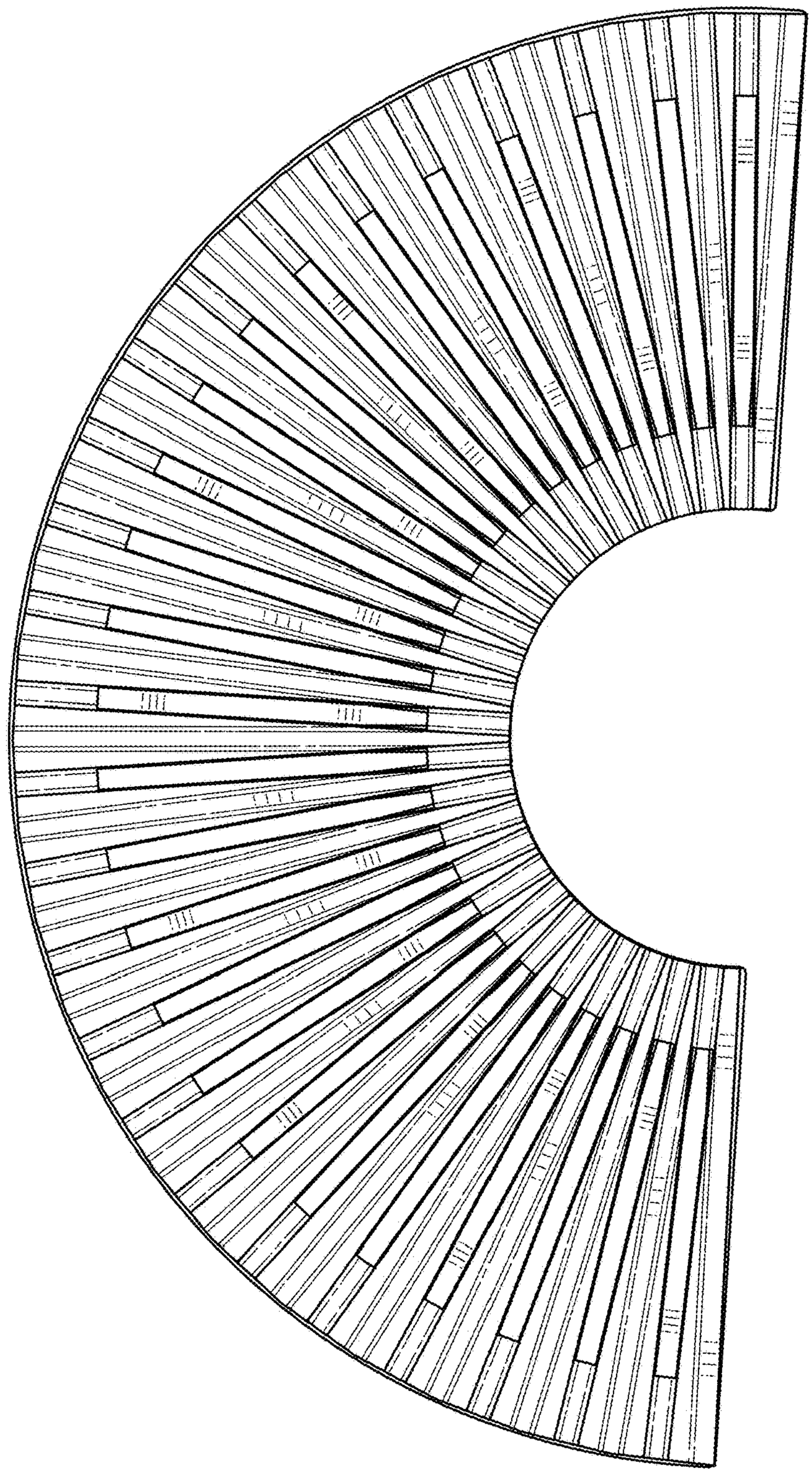

FIG. 6

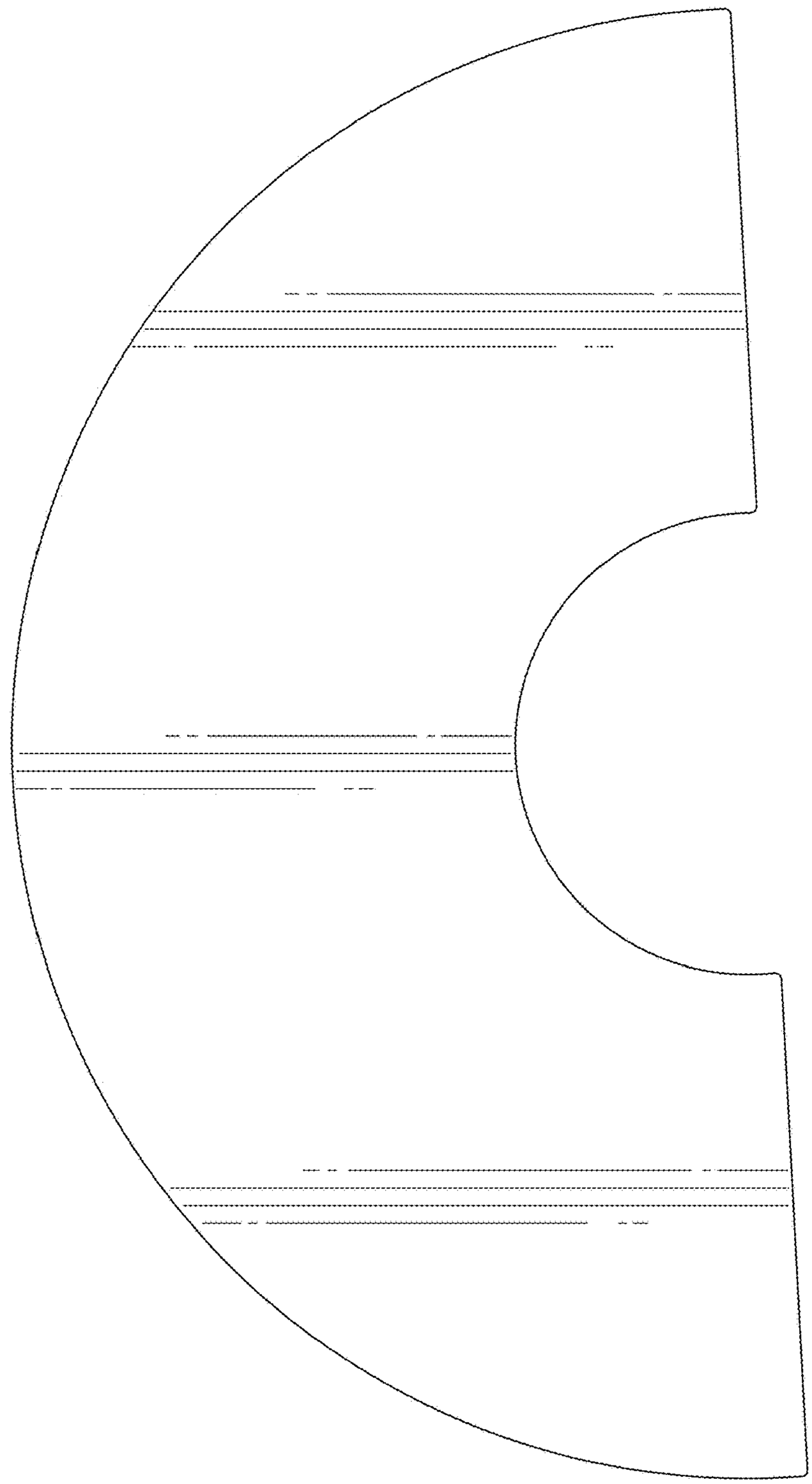

FIG. 7