US00D842628S

(12) United States Design Patent

Siminoff et al.

(10) Patent No.: US D842,628 S
(45) Date of Patent: ** Mar. 12, 2019

(54) **PRODUCT DISPLAY**

(71) Applicant: **Ring Inc.**, Santa Monica, CA (US)

(72) Inventors: **James Siminoff**, Pacific Palisades, CA (US); **Hong Swain**, Los Angeles, CA (US)

(73) Assignee: **Amazon Technologies, Inc.**, Seattle, WA (US)

(**) Term: **15 Years**

(21) Appl. No.: **29/621,449**

(22) Filed: **Oct. 9, 2017**

(51) **LOC (11) Cl.** **06-04**

(52) **U.S. Cl.**
USPC **D6/672**

(58) **Field of Classification Search**
USPC D6/672, 675, 675.4, 681.2, 682, 683
CPC A47F 5/0043; A47F 5/08; A47F 5/0807; A47F 5/16; A47F 43/00; A47F 3/00; A47F 3/08; A47F 5/0018; A47F 5/10
See application file for complete search history.

(56) **References Cited**

U.S. PATENT DOCUMENTS

D274,203	S	*	6/1984	Everett	D6/675.4
D368,184	S	*	3/1996	Eley	D6/406.4
D464,498	S	*	10/2002	Riga	D6/673
D525,807	S	*	8/2006	Pinco	D6/682
D572,043	S	*	7/2008	Suzuki	D6/682
D584,529	S	*	1/2009	Neff	D6/675.4
D584,902	S	*	1/2009	Neff	D6/657
D589,723	S	*	4/2009	Zealer	D6/683
D591,083	S	*	4/2009	Singler	D6/672
D649,192	S	*	11/2011	Beukema	D19/75
D713,658	S	*	9/2014	Tio	D6/675
D723,842	S	*	3/2015	Walker	D6/672
D733,088	S	*	6/2015	Gameau	D14/172
D734,965	S	*	7/2015	Tio	D6/675
D741,091	S	*	10/2015	Tio	D6/675
D756,137	S	*	5/2016	Abelmann	D6/336
D769,651	S	*	10/2016	Tio	D6/675
D774,805	S	*	12/2016	Thiele	D6/672
D777,478	S	*	1/2017	Krauss	D6/675
D779,240	S	*	2/2017	Tio	D6/675
D806,447	S	*	1/2018	Burton	D6/657
D806,448	S	*	1/2018	Burton	D6/657
D807,086	S	*	1/2018	Tio	D6/675
D815,864	S	*	4/2018	Burton	D6/675

(Continued)

Primary Examiner — John Windmuller
Assistant Examiner — Steven J Czyz
(74) *Attorney, Agent, or Firm* — Chong IP Law, LLP

(57) **CLAIM**

The ornamental design for a product display, as shown and described.

DESCRIPTION

FIG. **1** is a front perspective view of a product display according to the present design;
FIG. **2** is a front elevational view of the product display of FIG. **1**;
FIG. **3** is a rear elevational view of the product display of FIG. **1**;
FIG. **4** is a right-side elevational view of the product display of FIG. **1**;
FIG. **5** is a left-side elevational view of the product display of FIG. **1**;
FIG. **6** is a top plan view of the product display of FIG. **1**;
FIG. **7** is a bottom plan view of the product display of FIG. **1**; and,
FIG. **8** is a front perspective view of the product display shown with environment.
The broken lines depict portions of the article and environment that form no part of the claimed design.

1 Claim, 8 Drawing Sheets

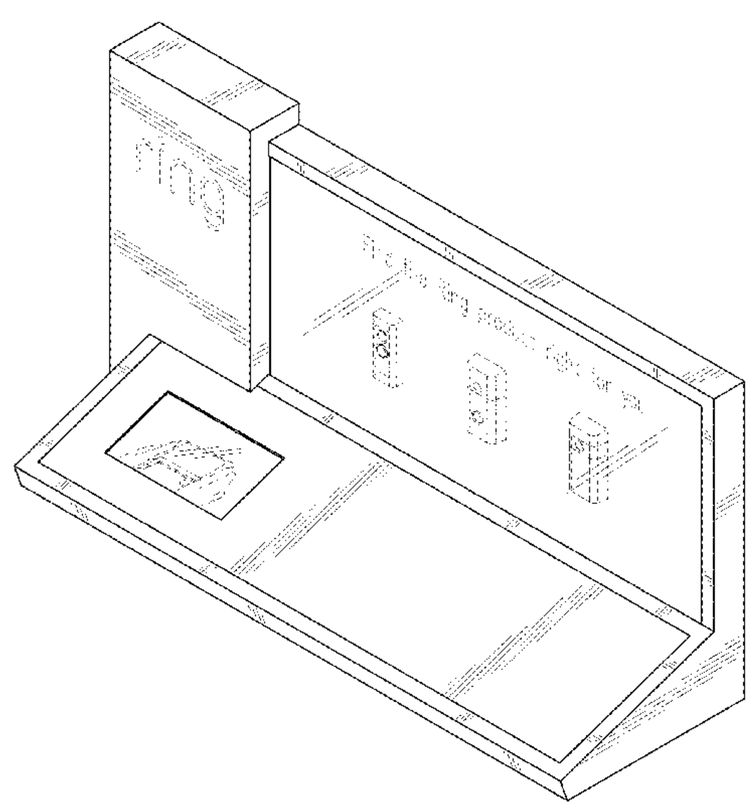

(56) **References Cited**

U.S. PATENT DOCUMENTS

D821,119 S * 6/2018 Choi D6/675
D824,702 S * 8/2018 Tio D6/675

* cited by examiner

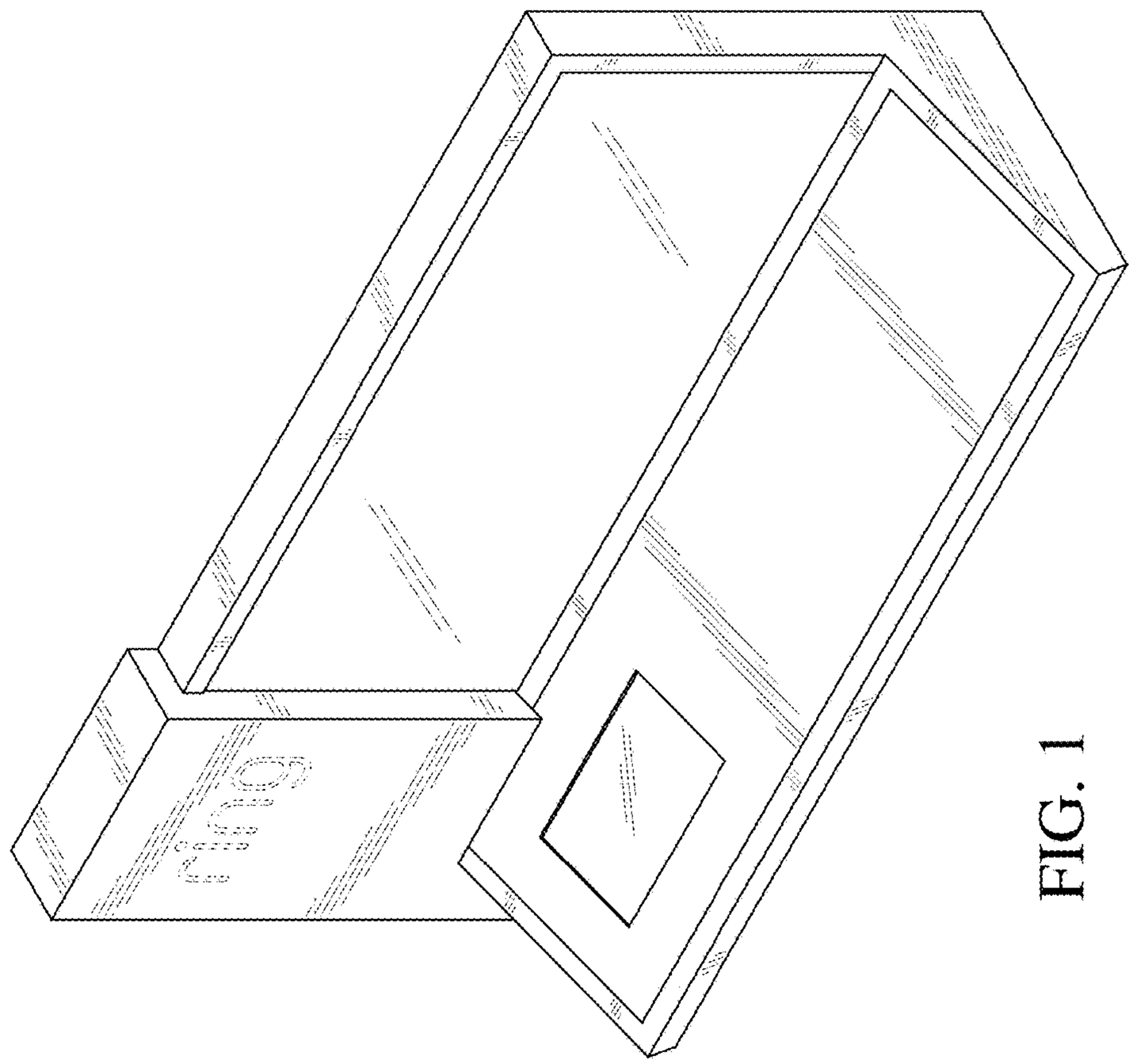

FIG. 1

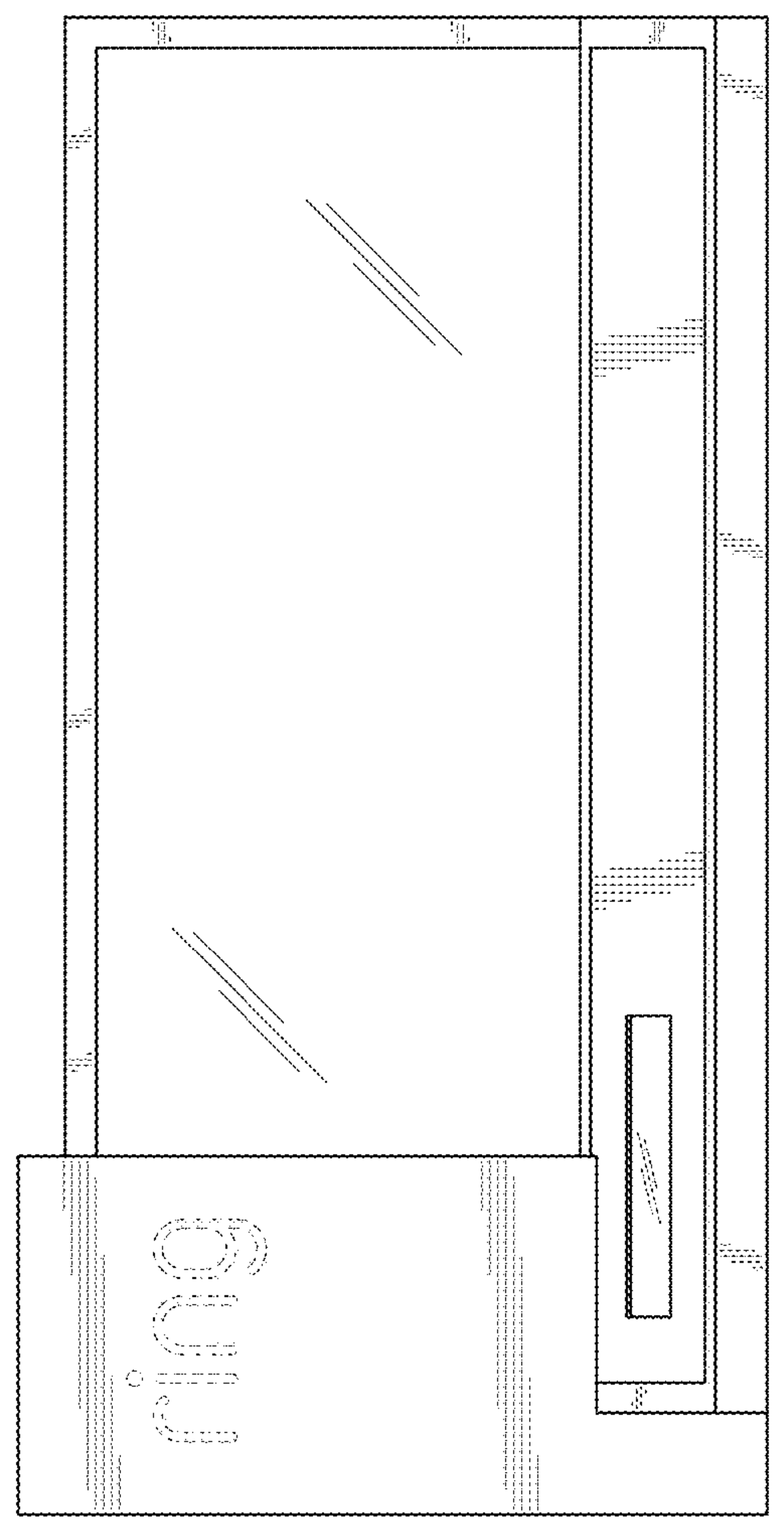

FIG. 2

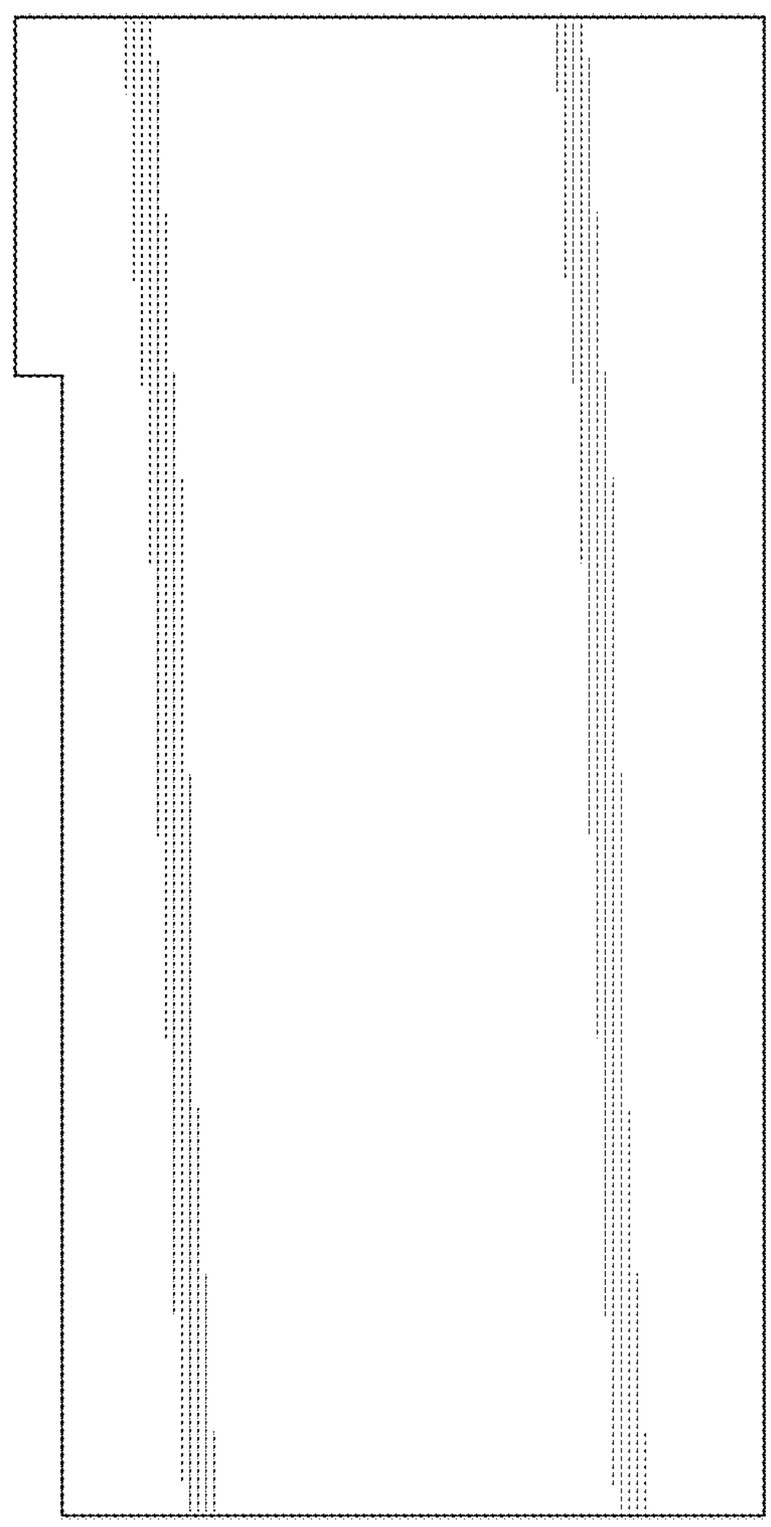

FIG. 3

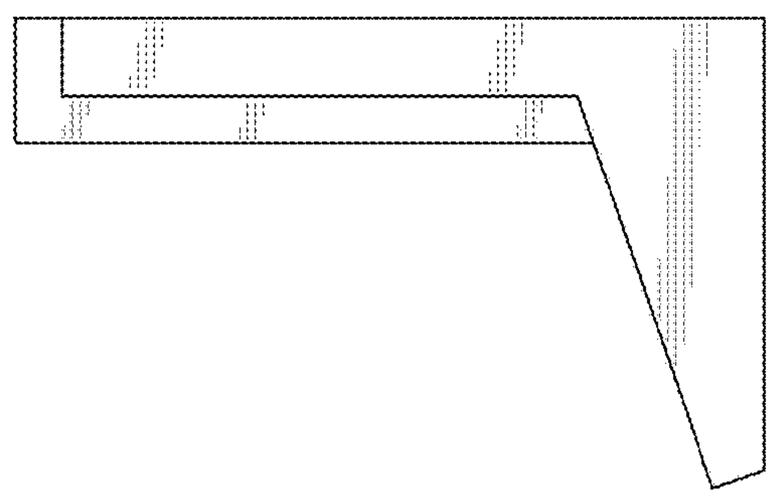

FIG. 4

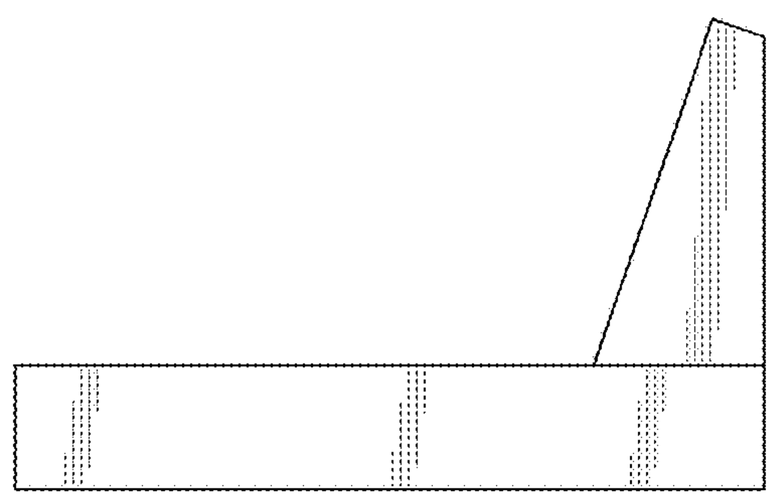

FIG. 5

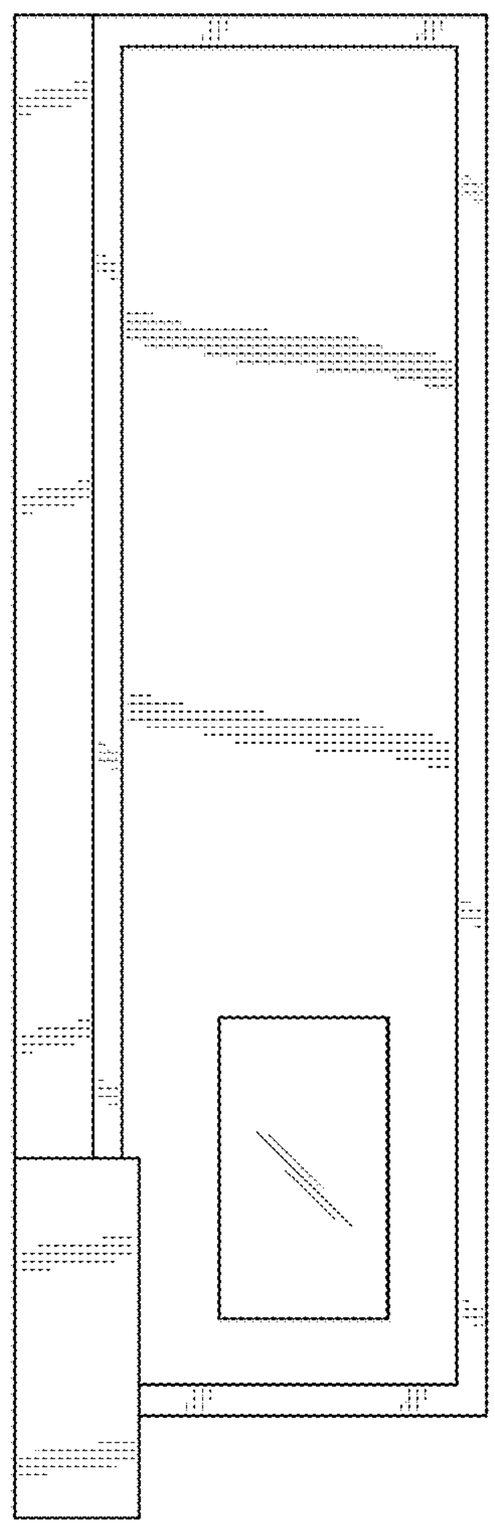

FIG. 6

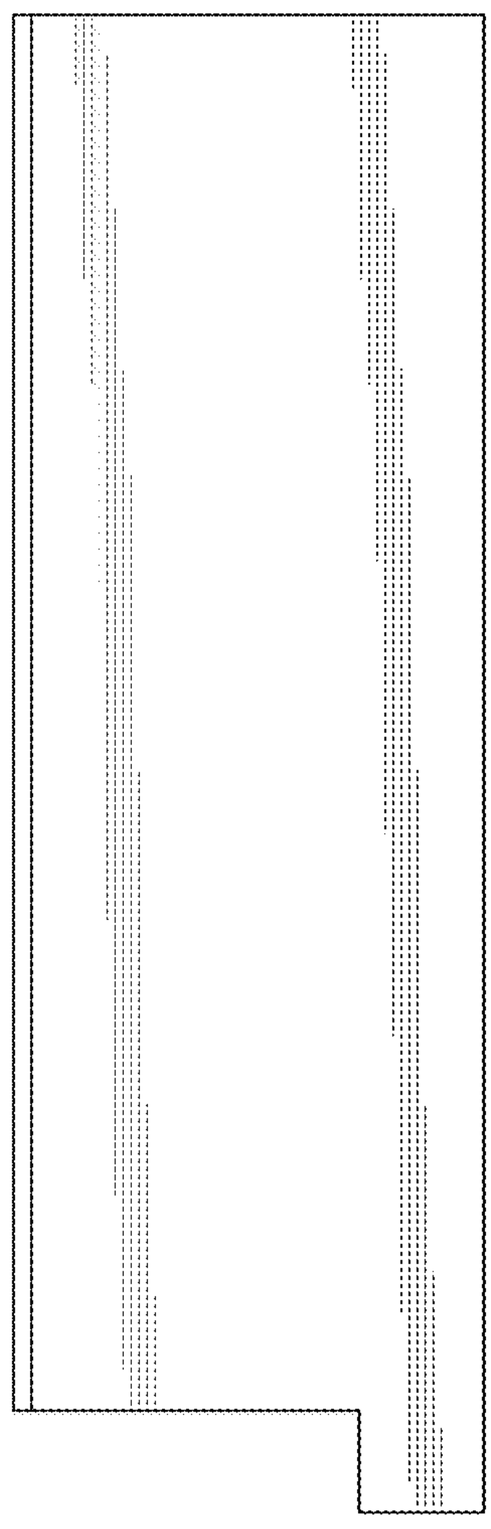

FIG. 7

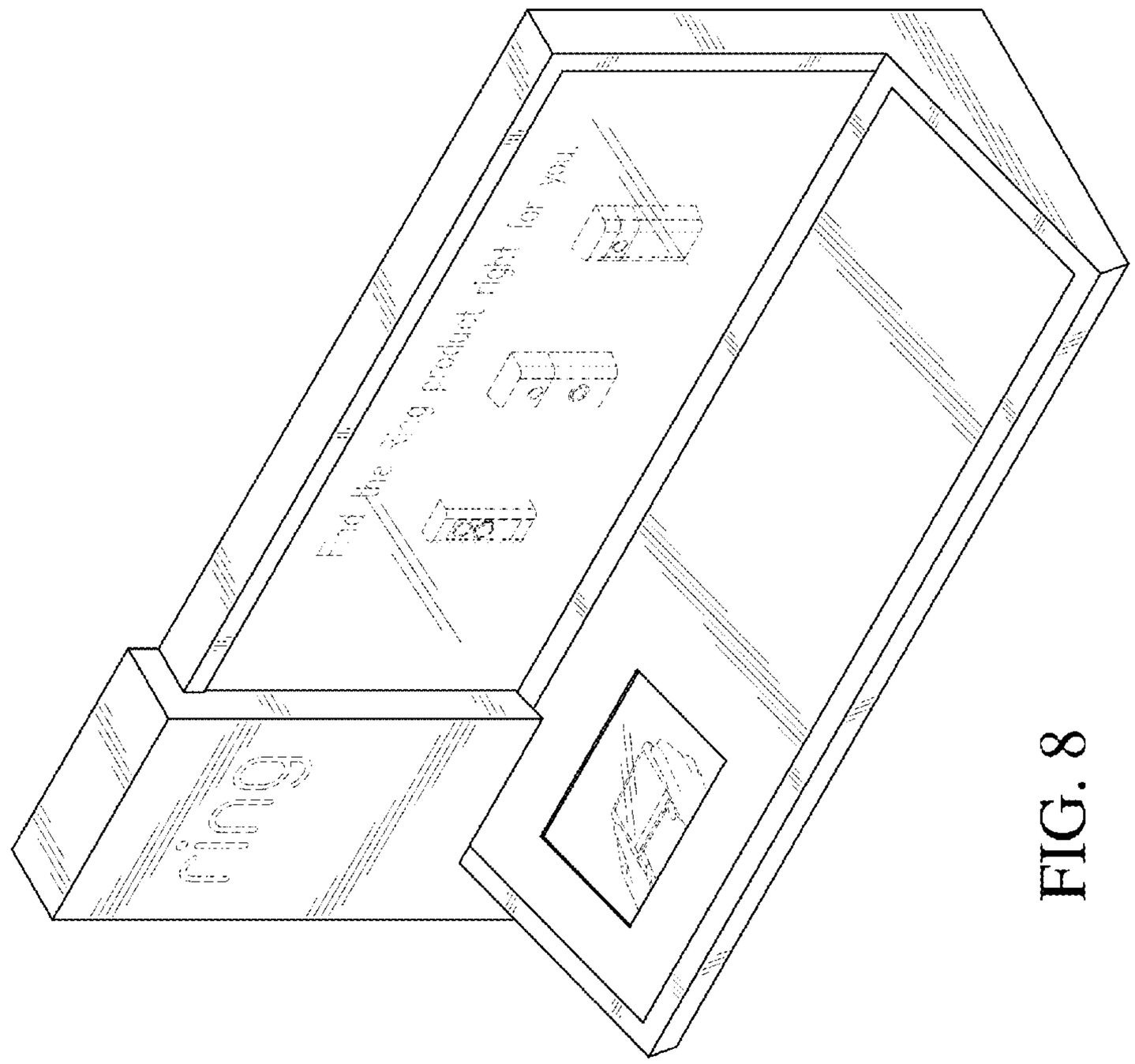

FIG. 8