US00D842485S

(12) **United States Design Patent** (10) **Patent No.: US D842,485 S**
Beelte et al. (45) **Date of Patent: ** Mar. 5, 2019**

(54) **PHOTOTHERAPY DEVICE**

(71) Applicant: **Draeger Medical Systems, Inc.**, Andover, MA (US)

(72) Inventors: **Anna Beelte**, Lübeck (DE); **Andreas Nandzik**, Berlin (DE)

(73) Assignee: **Draeger Medical Systems, Inc.**, Andover, MA (US)

(**) Term: **15 Years**

(21) Appl. No.: **29/609,476**

(22) Filed: **Jun. 30, 2017**

(51) **LOC (11) Cl.** **28-03**

(52) **U.S. Cl.**
USPC **D24/209**

(58) **Field of Classification Search**
USPC D24/107, 186, 158, 231, 200, 209, 210, D24/214, 215, 185; D26/37–39
(Continued)

(56) **References Cited**

U.S. PATENT DOCUMENTS

D247,756 S * 4/1978 Nagelkerke D24/210
D505,207 S * 5/2005 Waldmann D24/210
(Continued)

OTHER PUBLICATIONS

Atom Medical Corporation, Bili-Therapy Spot Type, LED Phototherapy Unit, Jul. 2012 (2 pages).
(Continued)

Primary Examiner — Anhdao Doan
(74) *Attorney, Agent, or Firm* — Jones Day

(57) **CLAIM**

The ornamental design for a phototherapy device, as shown and described.

DESCRIPTION

FIG. **1** is a front perspective view of a first phototherapy device;
FIG. **2** is a front view of the phototherapy device of FIG. **1**;
FIG. **3** is a back view of the phototherapy device of FIG. **1**;
FIG. **4** is a first side view of the phototherapy device of FIG. **1**;
FIG. **5** is a second side view of the phototherapy device of FIG. **1**;
FIG. **6** is a top view of the phototherapy device of FIG. **1**;
FIG. **7** is a bottom view of the phototherapy device of FIG. **1**;
FIG. **8** is a front perspective view of a second phototherapy device;
FIG. **9** is a front view of the phototherapy device of FIG. **8**;
FIG. **10** is a back view of the phototherapy device of FIG. **8**;
FIG. **11** is a first side view of the phototherapy device of FIG. **8**;
FIG. **12** is a second side view of the phototherapy device of FIG. **8**;
FIG. **13** is a top view of the phototherapy device of FIG. **8**;
FIG. **14** is a bottom view of the phototherapy device of FIG. **8**;
FIG. **15** is a front perspective view of a third phototherapy device;
FIG. **16** is a front view of the phototherapy device of FIG. **15**;
FIG. **17** is a back view of the phototherapy device of FIG. **15**;
FIG. **18** is a first side view of the phototherapy device of FIG. **15**;
FIG. **19** is a second side view of the phototherapy device of FIG. **15**;
FIG. **20** is a top view of the phototherapy device of FIG. **15**;
FIG. **21** is a bottom view of the phototherapy device of FIG. **15**;
FIG. **22** is a front perspective view of a fourth phototherapy device;
FIG. **23** is a front view of the phototherapy device of FIG. **22**;
FIG. **24** is a back view of the phototherapy device of FIG. **22**;
FIG. **25** is a first side view of the phototherapy device of FIG. **22**;
FIG. **26** is a second side view of the phototherapy device of FIG. **22**;
(Continued)

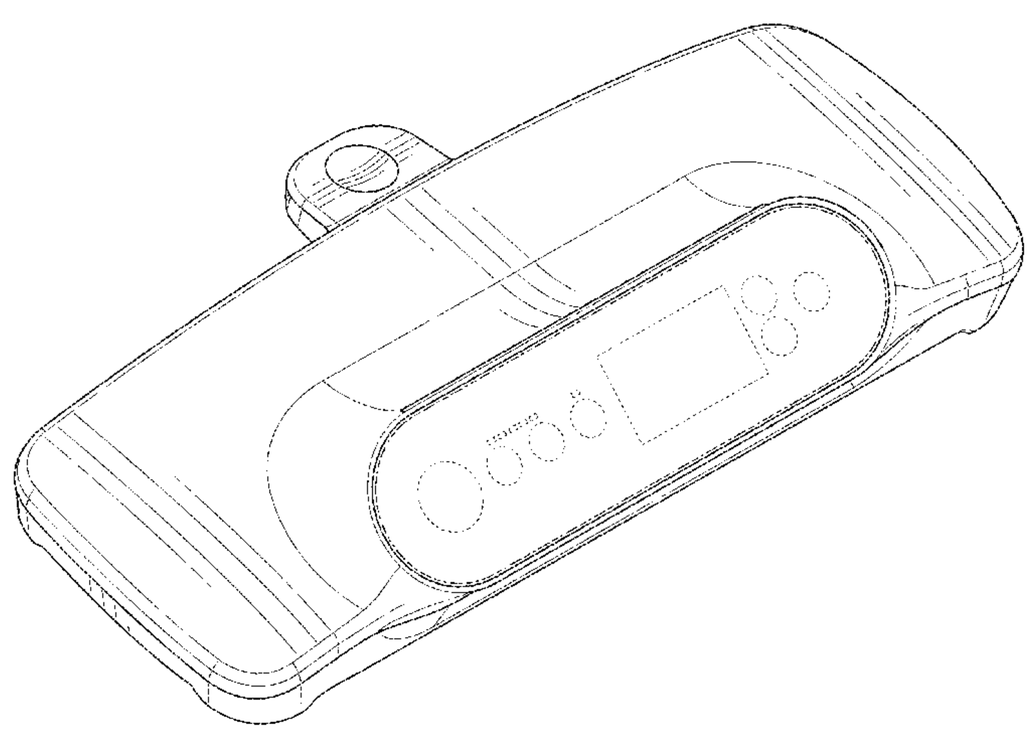

FIG. **27** is a top view of the phototherapy device of FIG. **22**; and,
FIG. **28** is a bottom view of the phototherapy device of FIG. **22**.
The dash-dot-dash lines and the dash-dash lines immediately adjacent to the shaded areas represent the bounds of the claim, while all other dash-dash lines are directed to environment and are for illustrative purposes only.

1 Claim, 28 Drawing Sheets

(58) **Field of Classification Search**
CPC A61N 5/0616; A61N 5/0617; A61N 5/062; A61N 5/0627; A61N 5/0625; A61N 2005/0643; A61N 2005/0644; A61N 2005/0645; A61N 2005/0647; A61N 2005/0651; A61N 2005/0652; A61B 2018/00452; A61B 2018/1807
See application file for complete search history.

(56) **References Cited**

U.S. PATENT DOCUMENTS

D509,300	S *	9/2005	Muller	D24/209
7,008,371	B2 *	3/2006	Goldberg	A61M 16/026 600/22
D593,684	S *	6/2009	Kapadya	D24/200
D597,214	S *	7/2009	Savage	D24/209
D641,490	S *	7/2011	Fernie	D24/210
D712,561	S *	9/2014	Hagenauer	D24/210
2004/0068305	A1 *	4/2004	Bansal	607/89
2004/0260365	A1 *	12/2004	Groseth	A61N 5/062 607/88
2010/0261948	A1 *	10/2010	Chilton	A61G 11/00 600/22
2011/0046433	A1 *	2/2011	Khodak	A61F 7/007 600/22
2016/0270993	A1 *	9/2016	Wilden	A61G 11/00

OTHER PUBLICATIONS

Atom Medical Corporation, Bili-Therapy Pad Type, LED Phototherapy Unit, Sep. 2012 (2 pages).
Bistos BT-400, [retrieved on May 3, 2017]. Retrieved from the internet: URL:http://www.bistos.co.kr/modules/catalogue_eng2/cg_image_view.html?no=12&ano=. 2017 (1 page).
Dräger, Photo-Therapy 4000, [retrieved on May 3, 2017]. Retrieved from the internet: URL:https://www.draeger.com/Products/Image/pt4000.jpg 2017 (1 page).
Fanem Bilitron Sky 5006, [retrieved on May 3, 2017]. Retrieved from the internet: URL:http://www.fanem.com.br/files/produtos/bilitron-sky-3.pg. 2017 (1 page).
Fanem Bilitron Sky 5006, [retrieved on May 3, 2017]. Retrieved from the internet: URL:http://www.fanem.com.br/files/produtos/bilitron-sky-1.jpg. 2017 (1 page).
Instanbul Medical KMF-01, [retrieved on May 3, 2017]. Retrieved from the internet: URL:http://istanbulmedikal.com.tr/en/admi/urun_yonetimi/server/WMXMECW421902.jpg. 2017 (1 page).
LED Phototherapy Unit JW-PU 1000, [retrieved on May 3, 2017]. Retrieved from the internet: URL:http://web.tradekorea.com/product/206/292206_03/oimg_GC06766290_CA06766410.jpg, 2017 (1 page).
Natus Medical Incorporated, neoBLUE Compact LED Phototherapy, 2015 (4 pages).
Natus Medical Incorporated, neoBLUE LED Phototherapy, 2012 (2 pages).

* cited by examiner

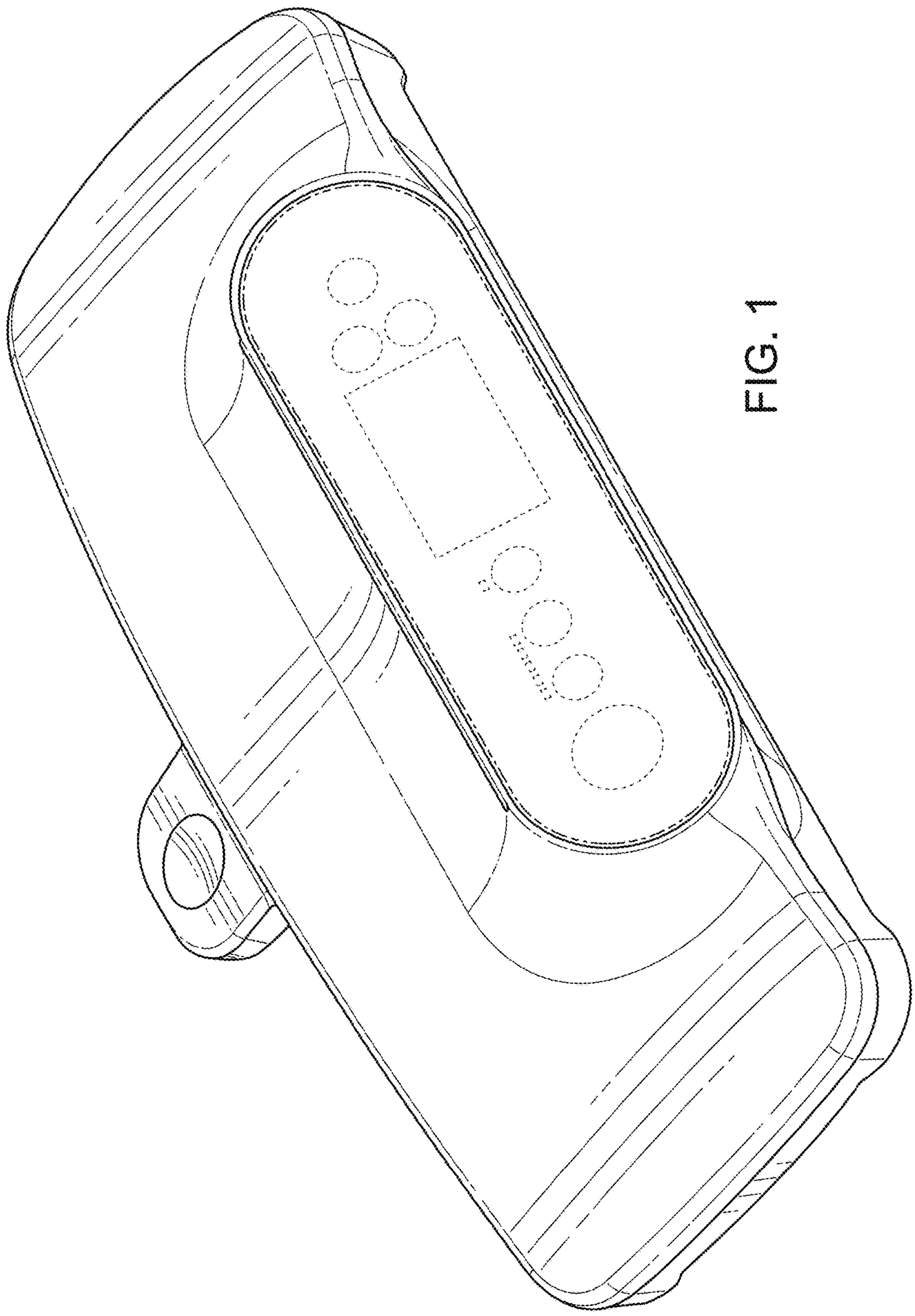

FIG. 1

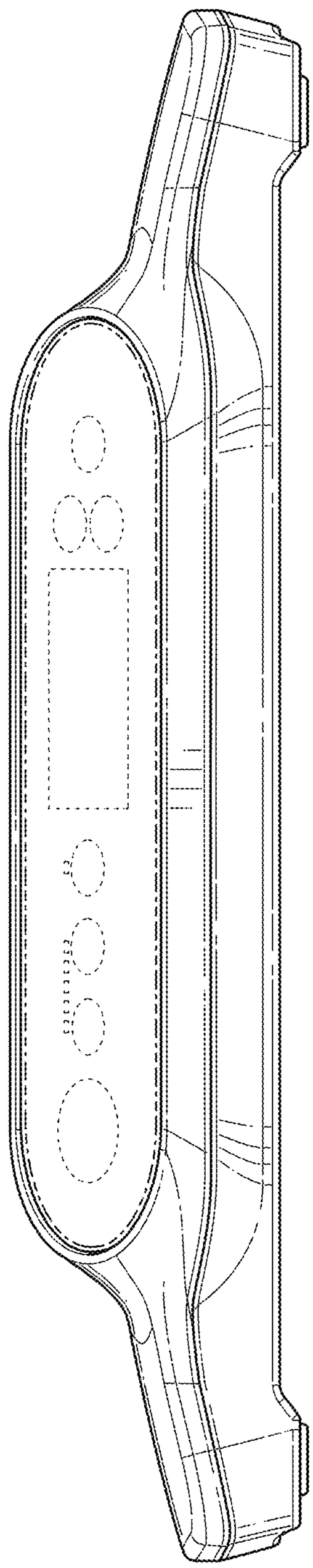

FIG. 2

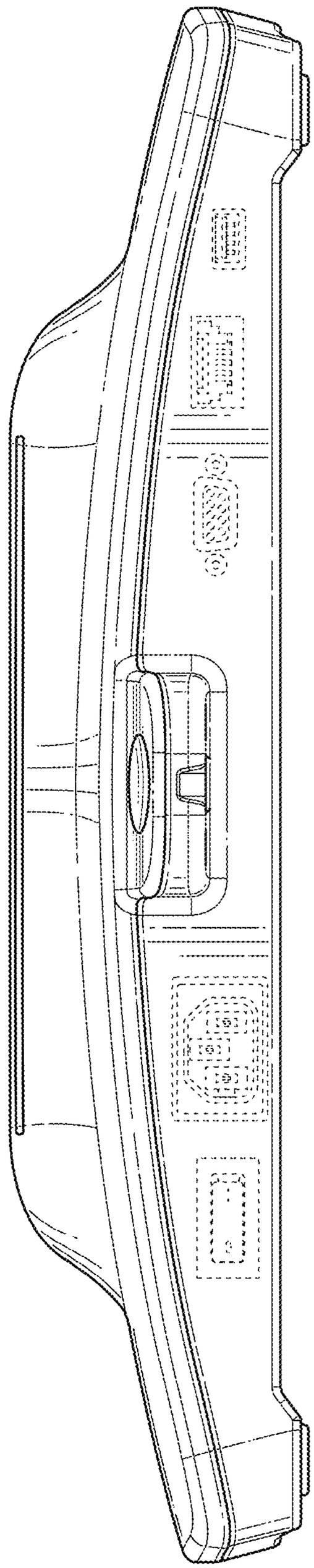

FIG. 3

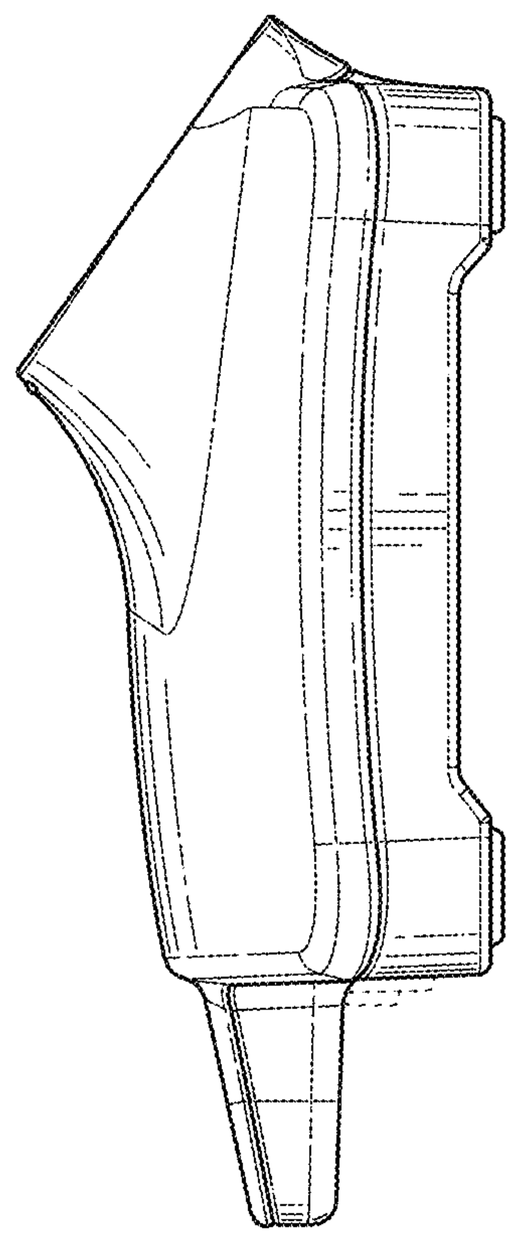

FIG. 4

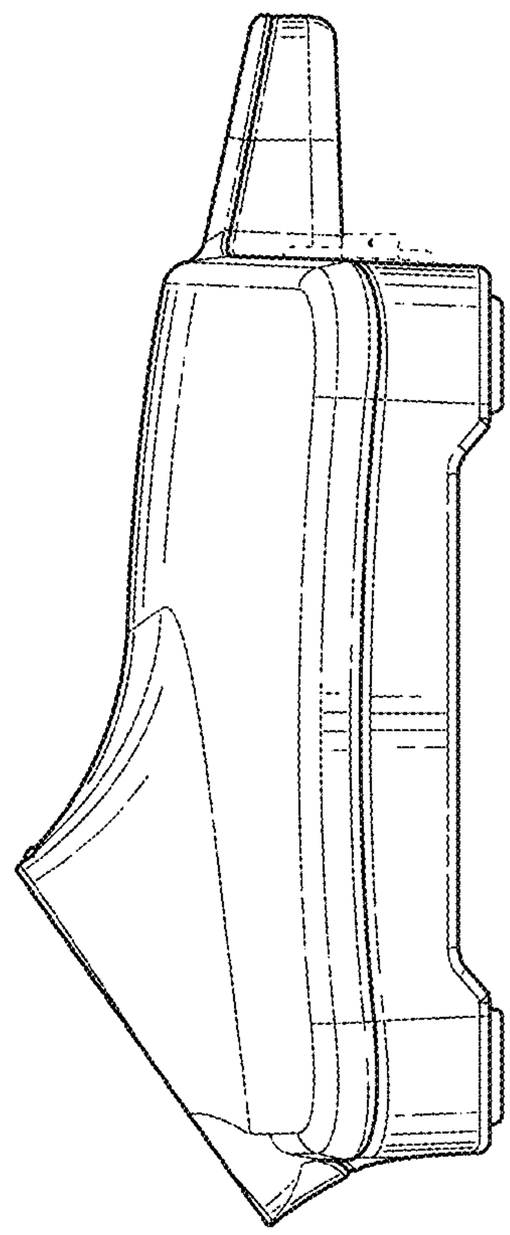

FIG. 5

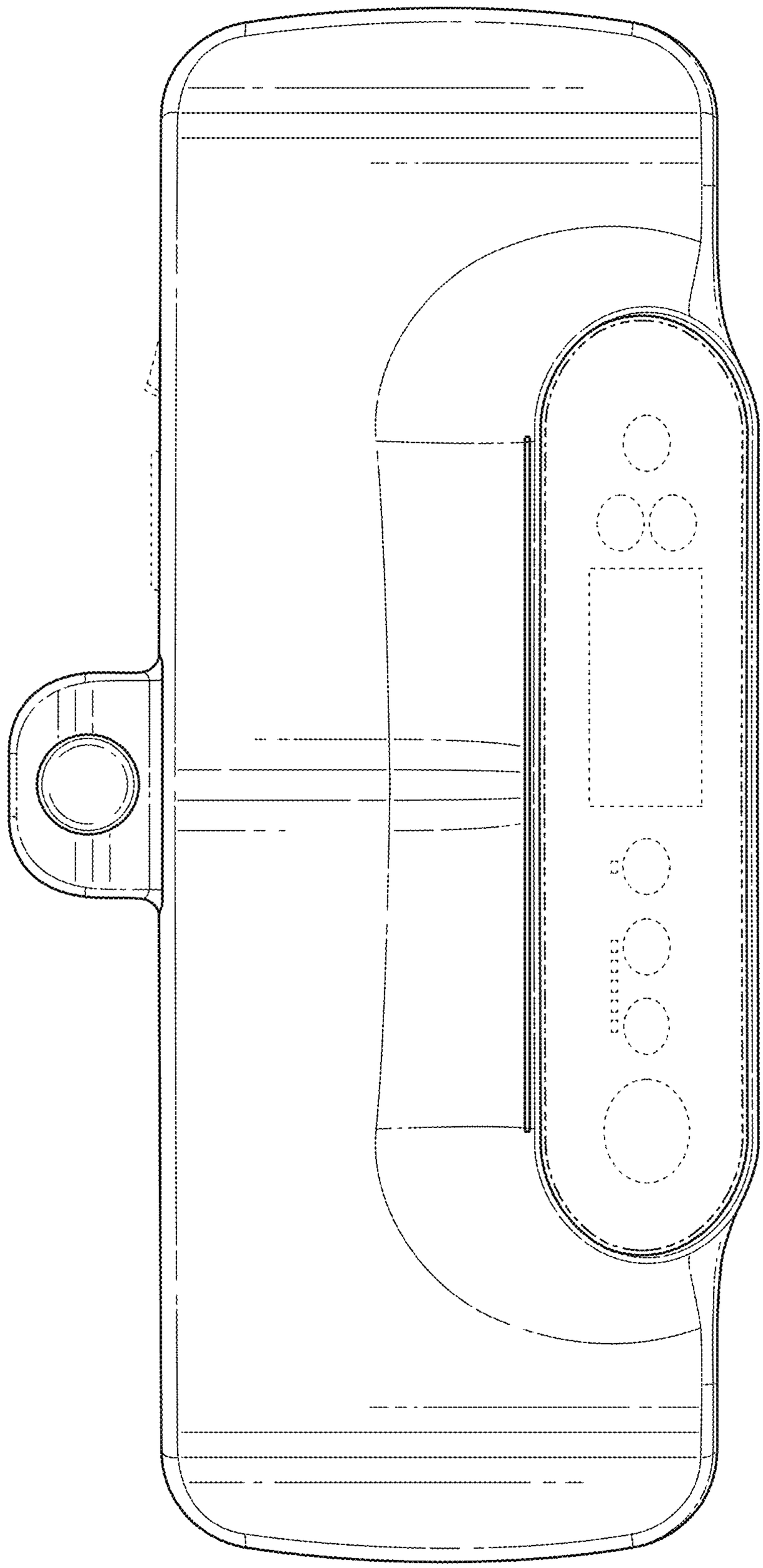

FIG. 6

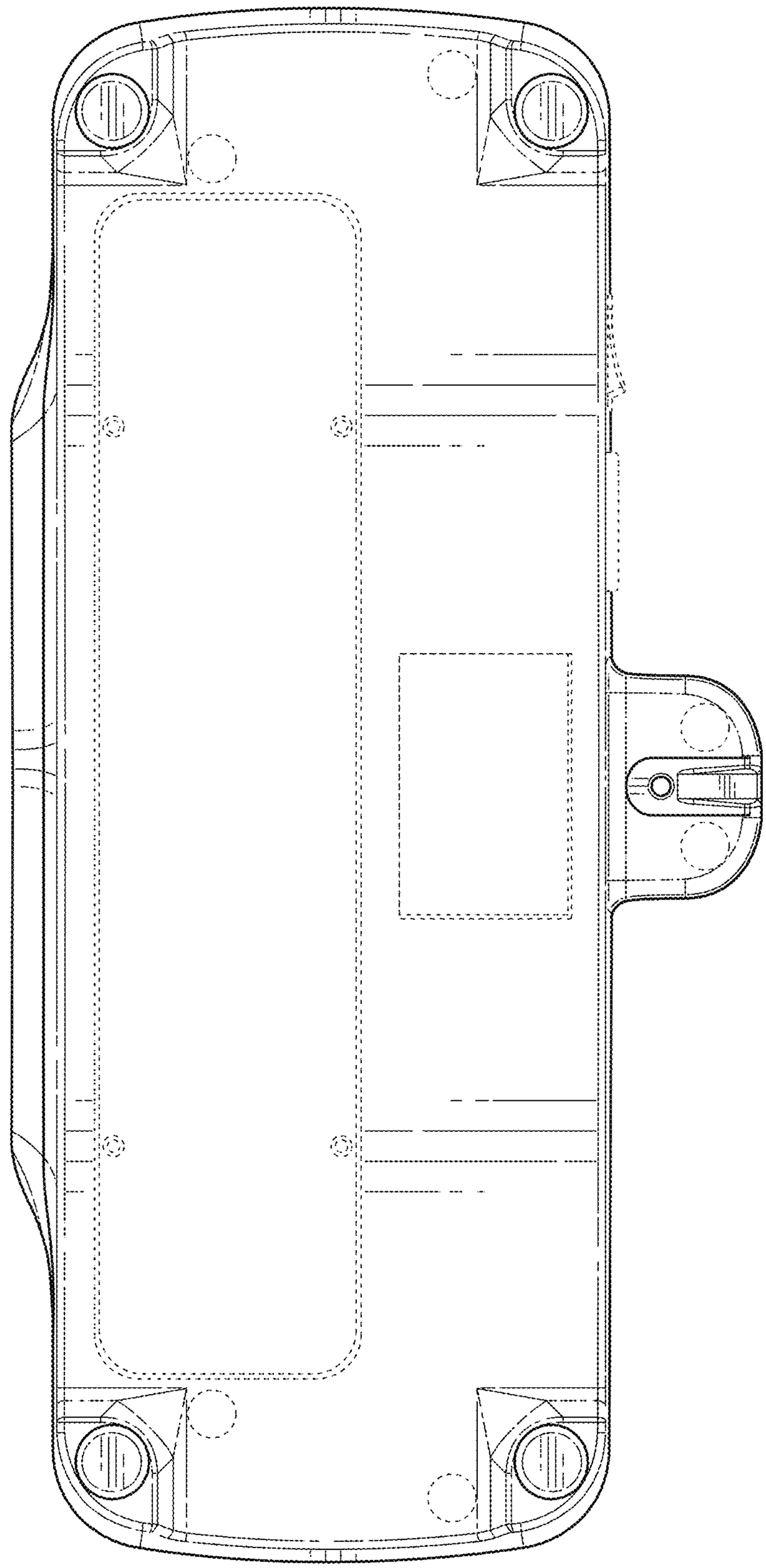

FIG. 7

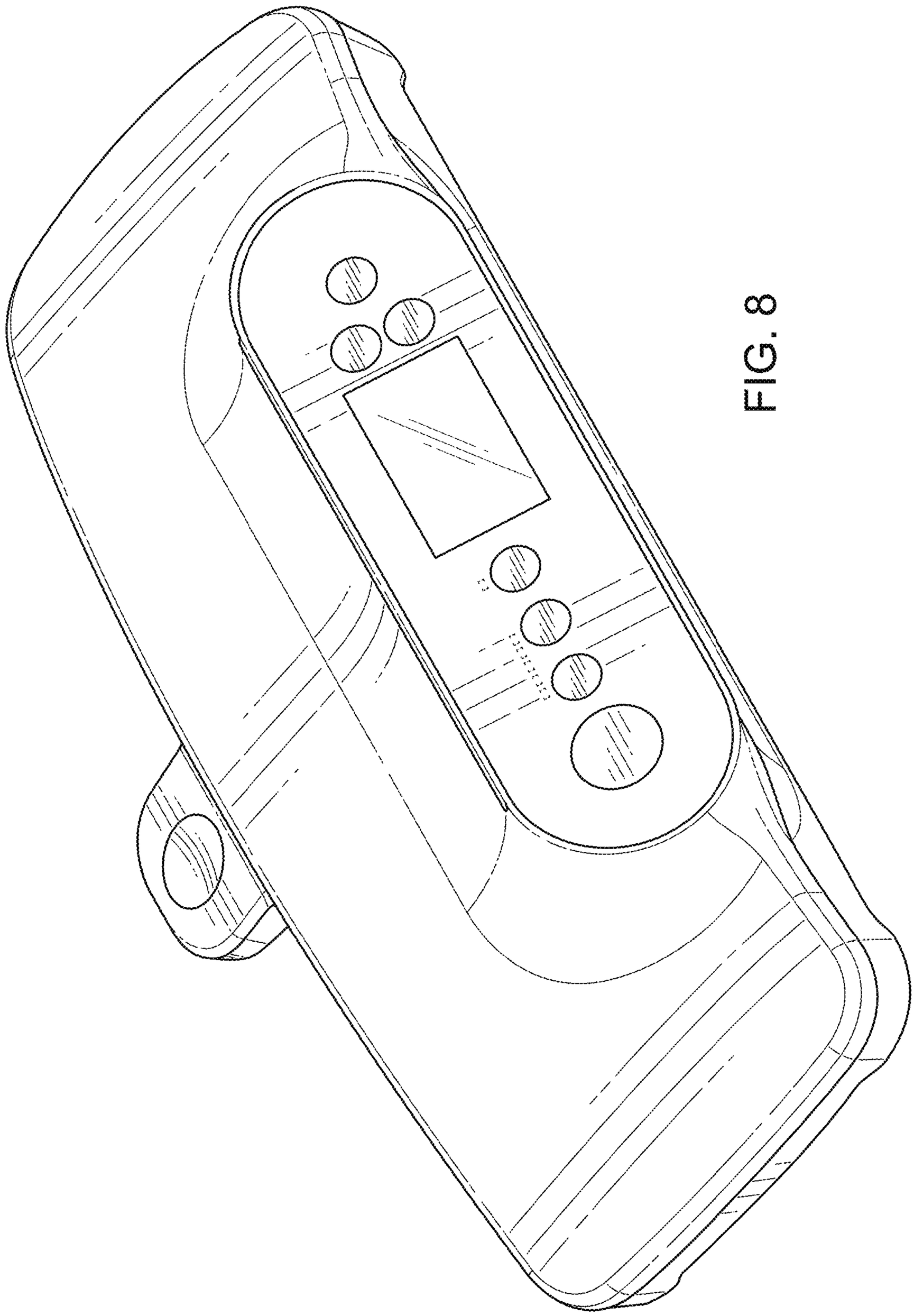

FIG. 8

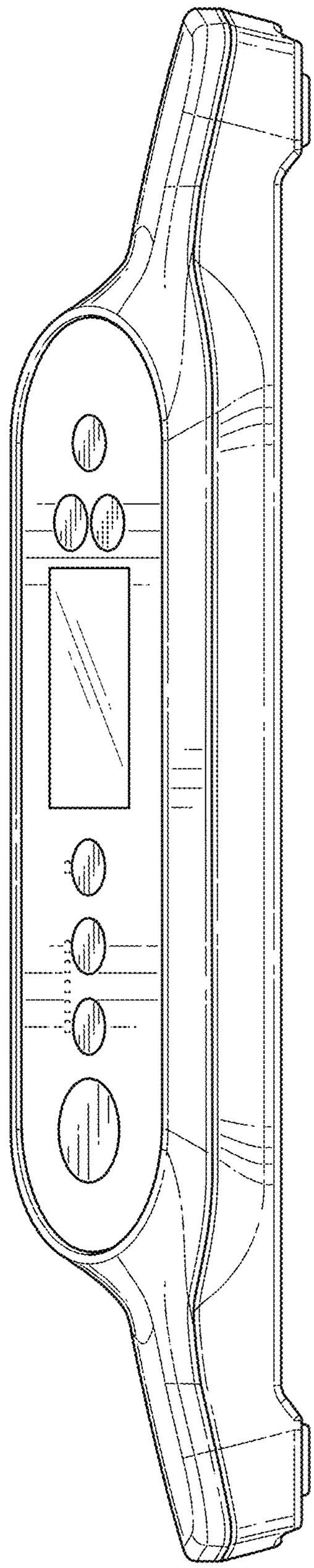

FIG. 9

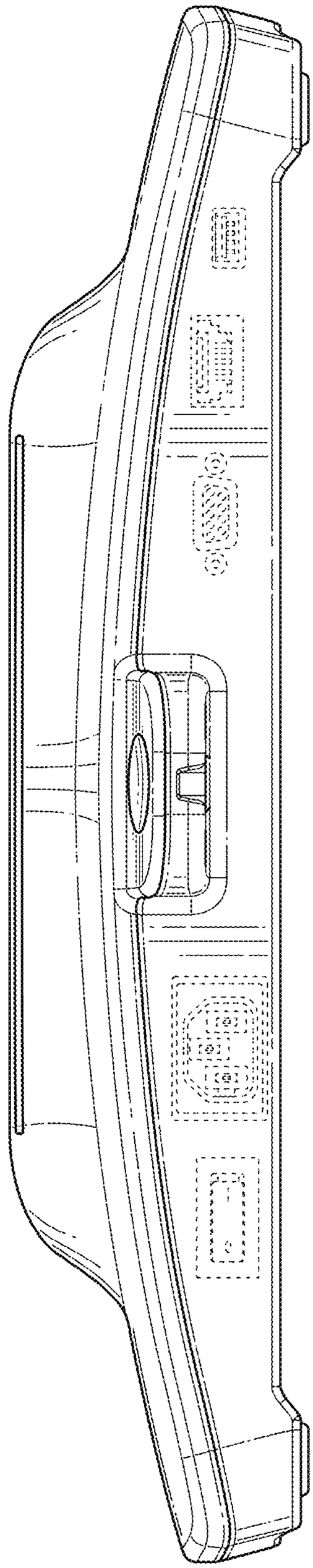

FIG. 10

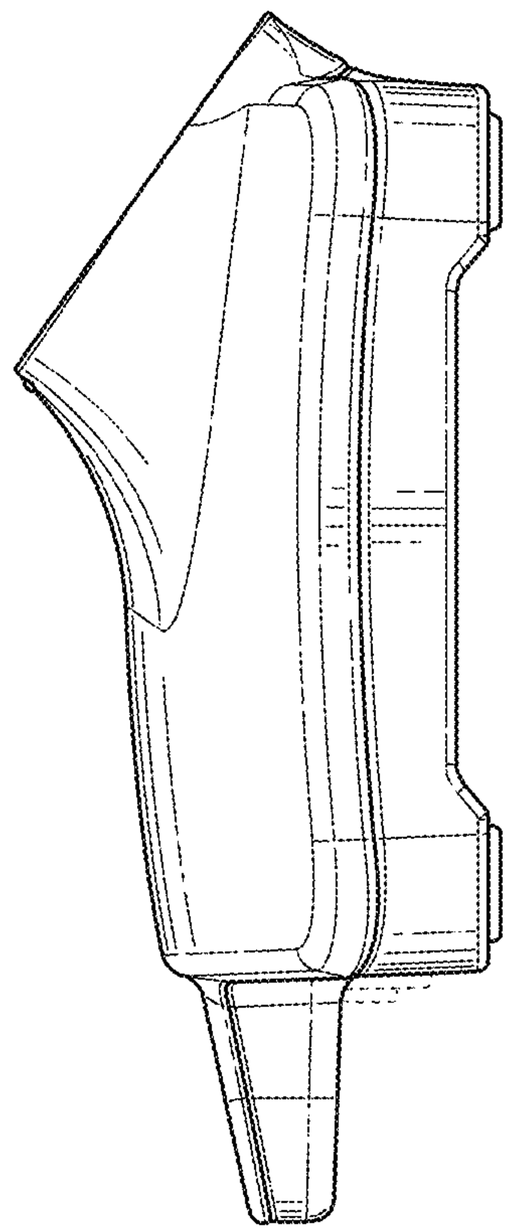

FIG. 11

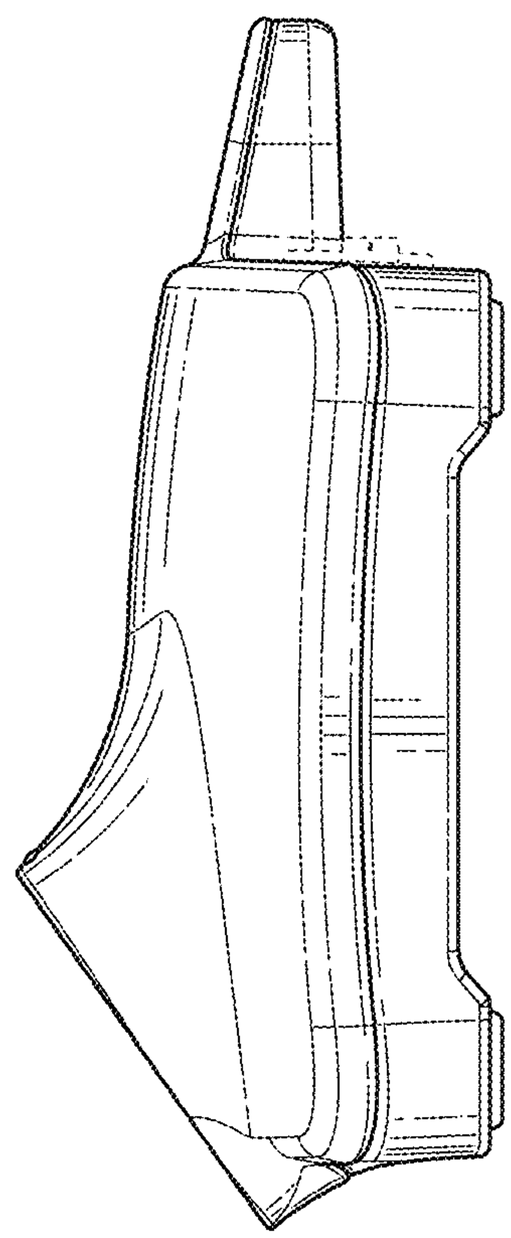

FIG. 12

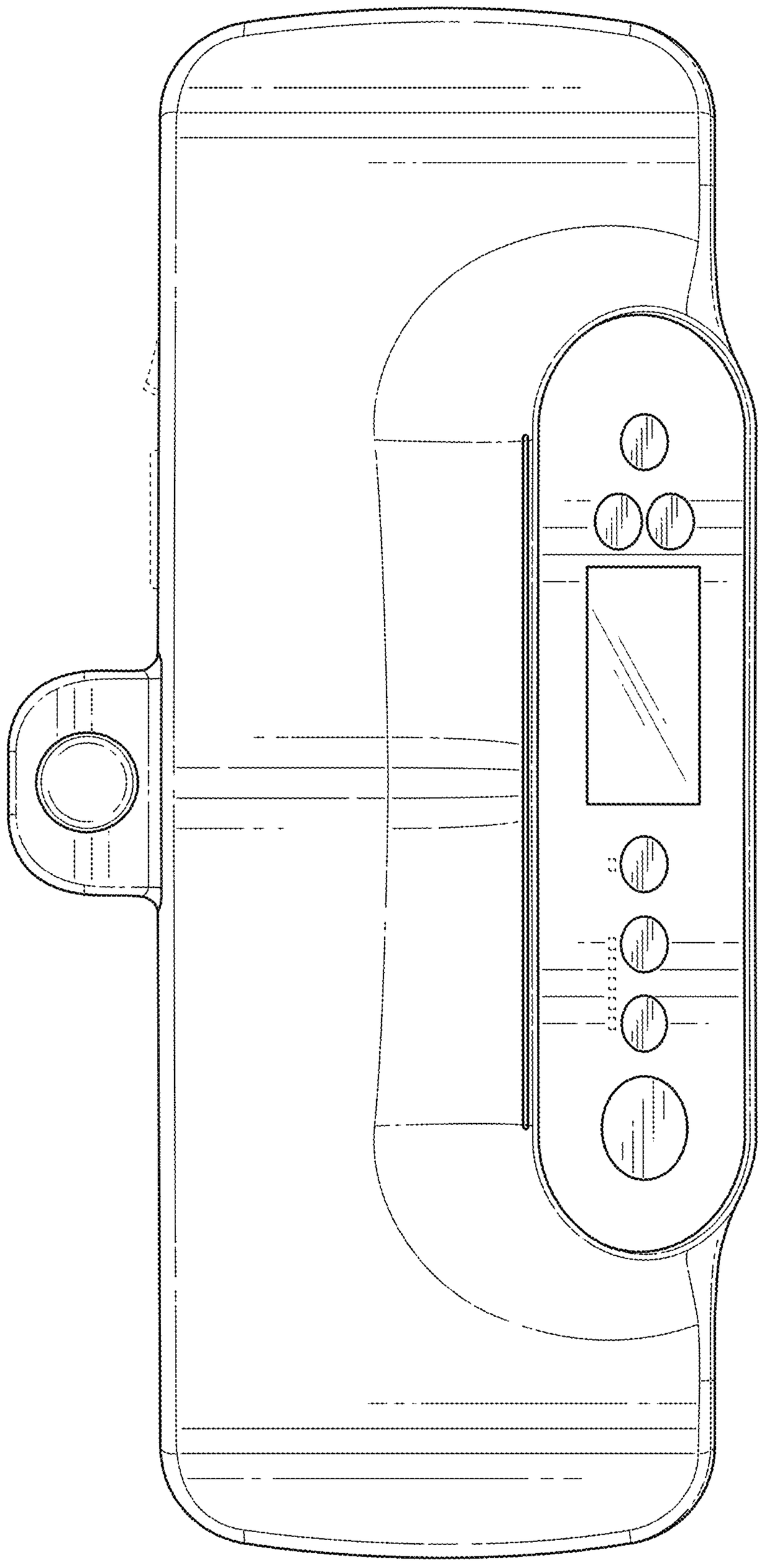

FIG. 13

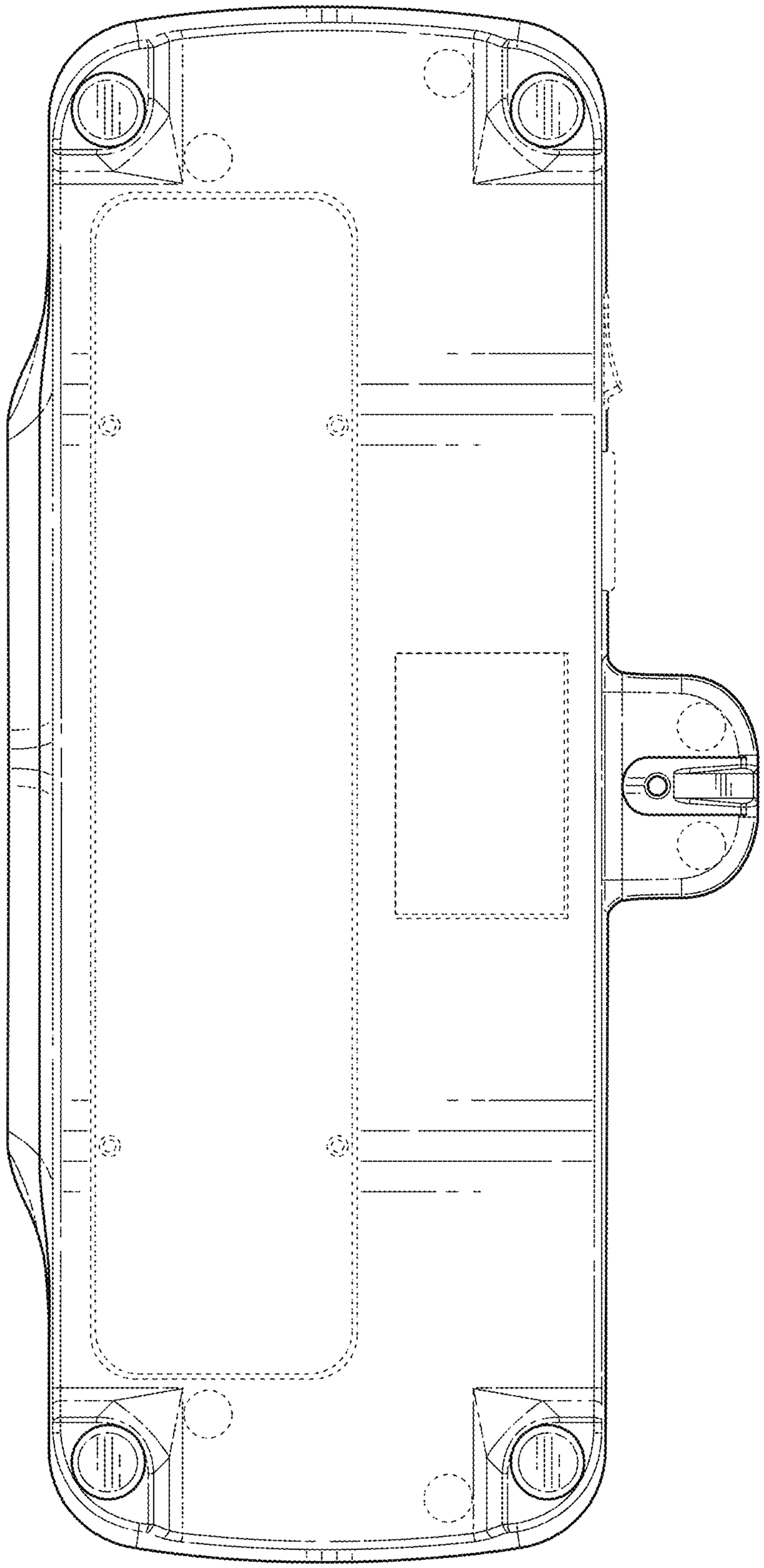

FIG. 14

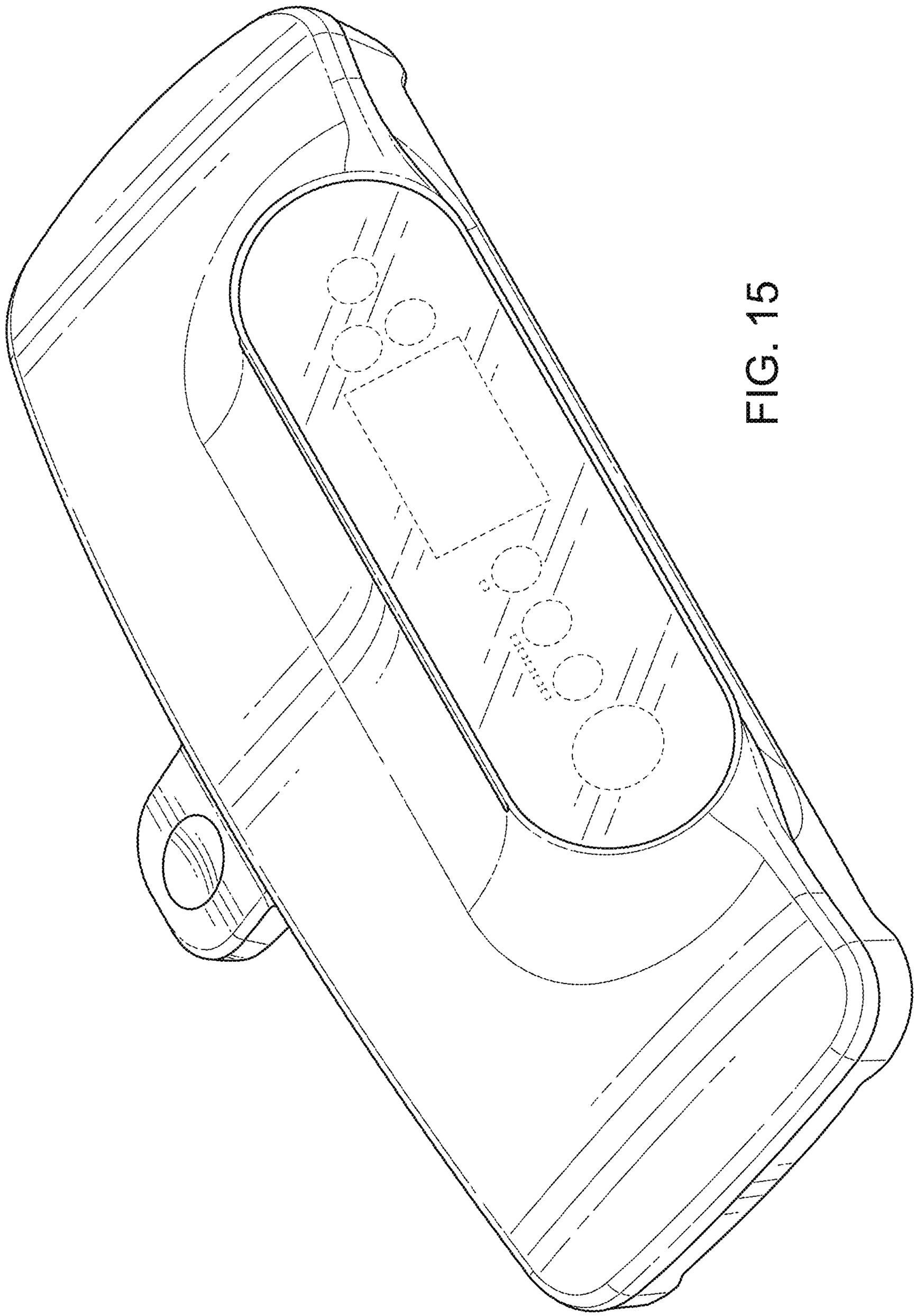

FIG. 15

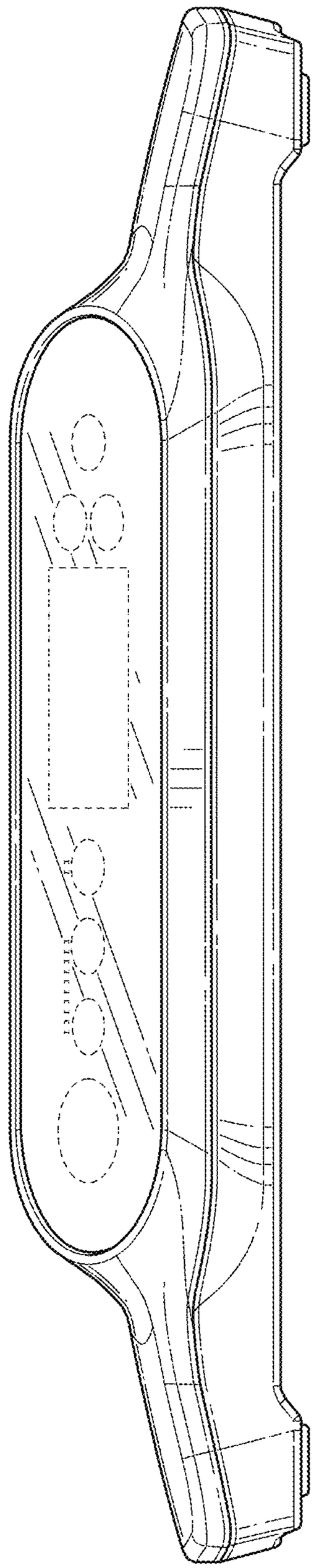

FIG. 16

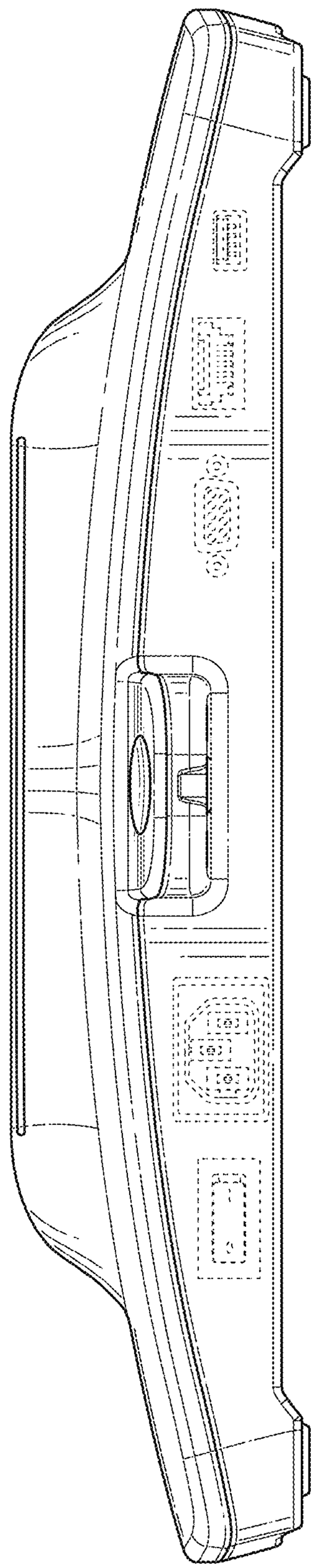

FIG. 17

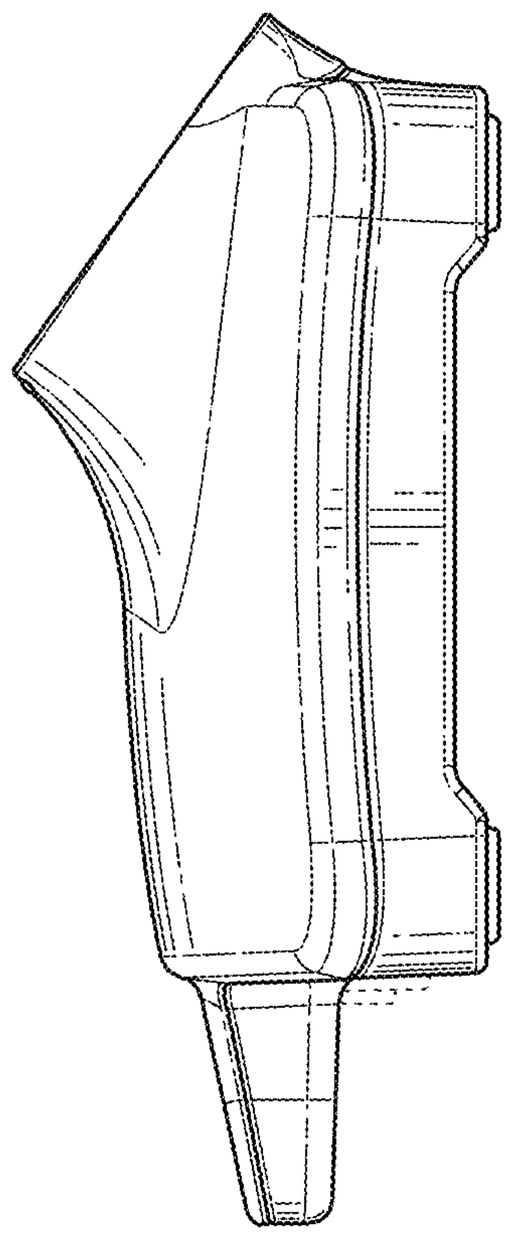

FIG. 18

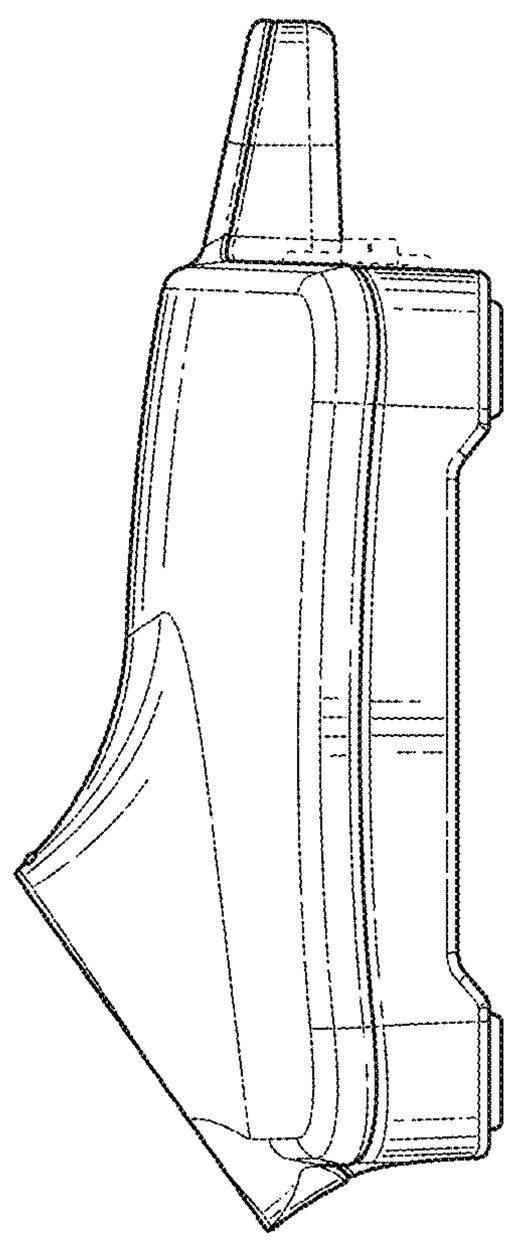

FIG. 19

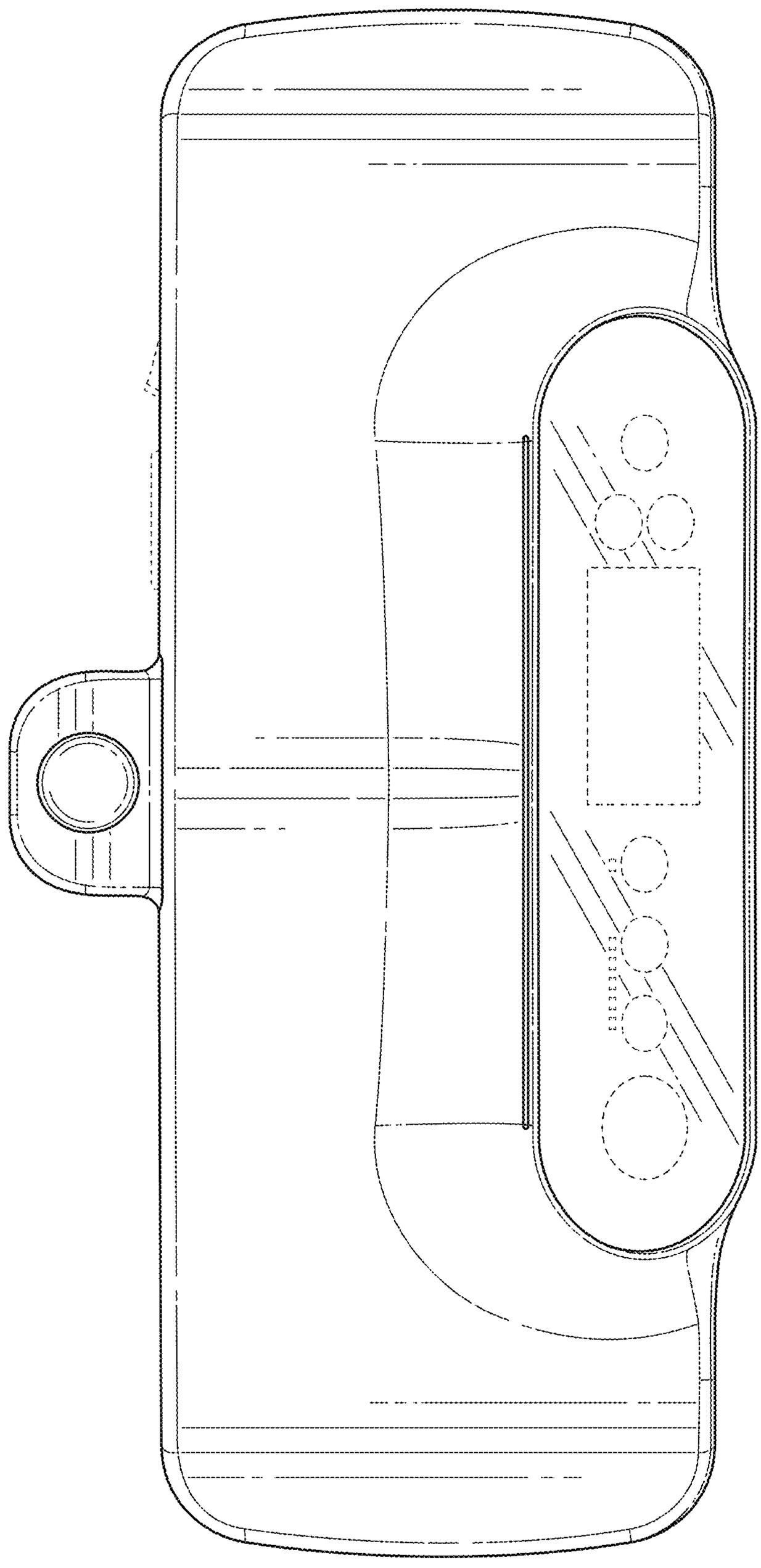

FIG. 20

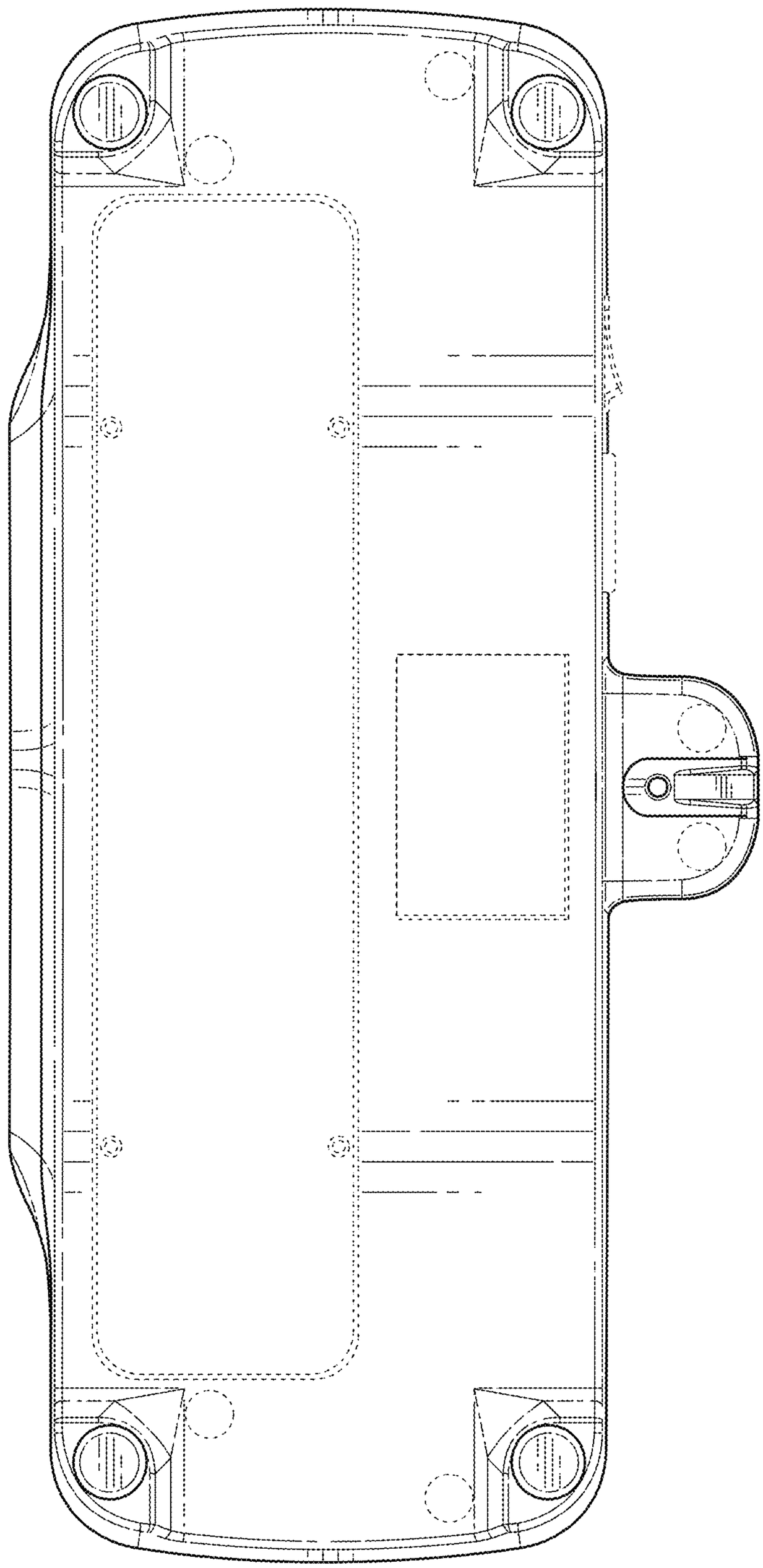

FIG. 21

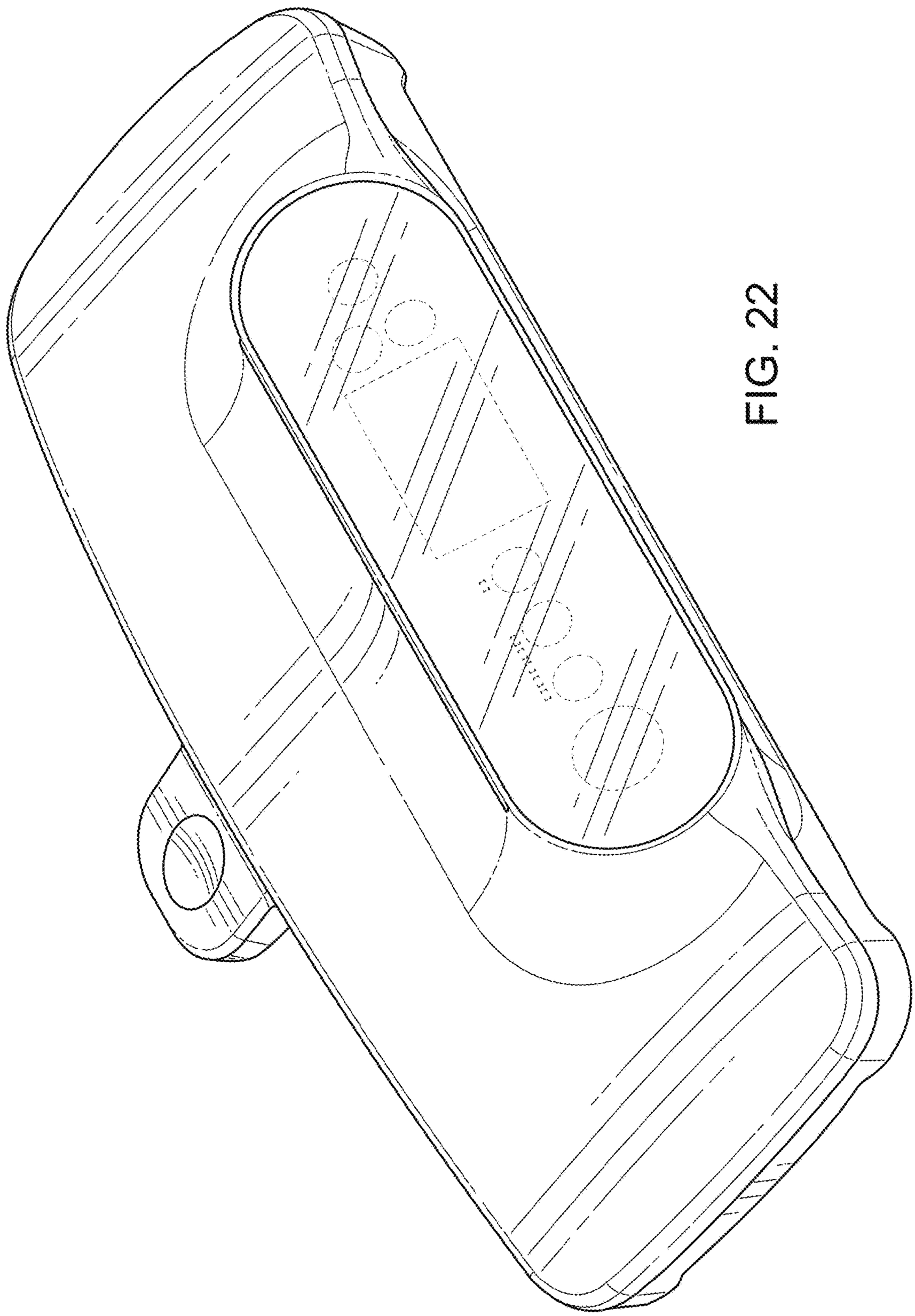

FIG. 22

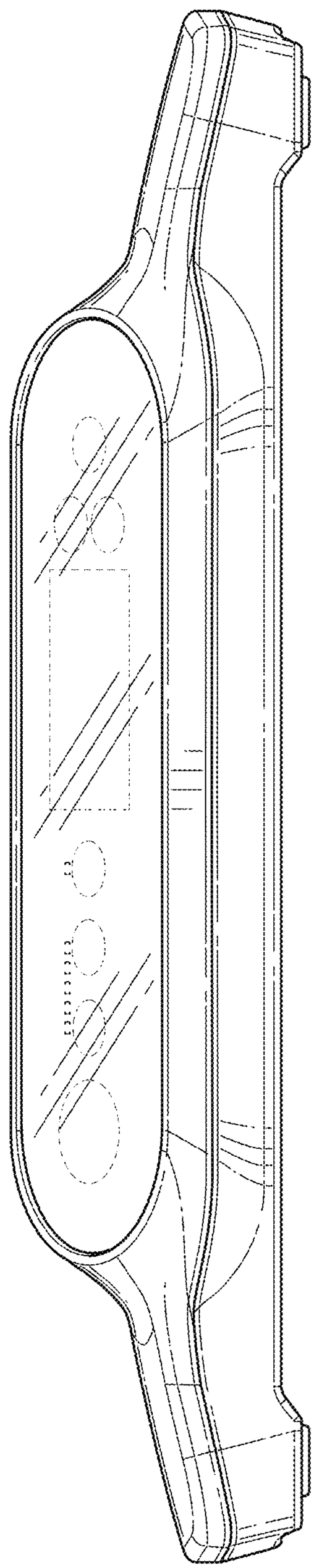

FIG. 23

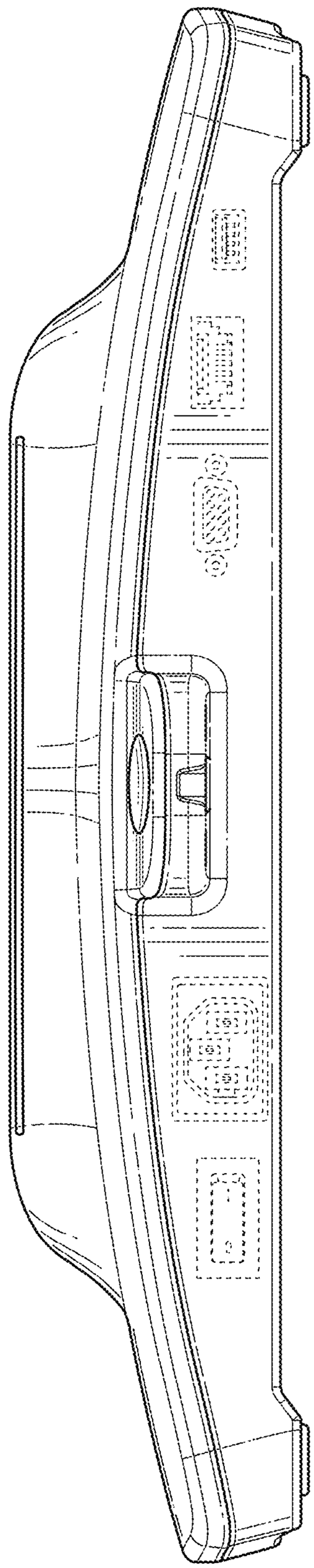

FIG. 24

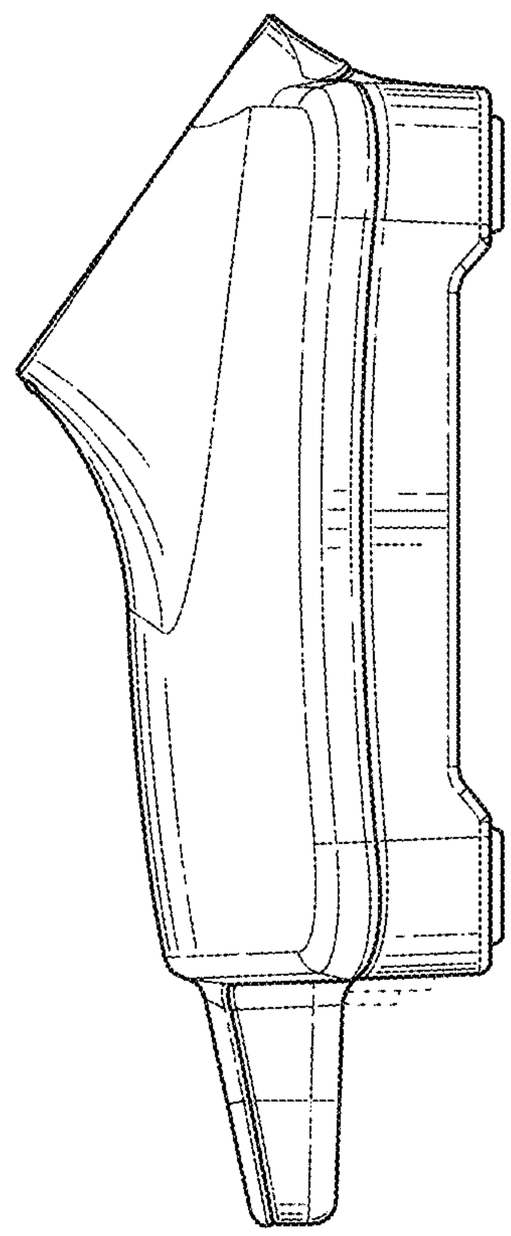

FIG. 25

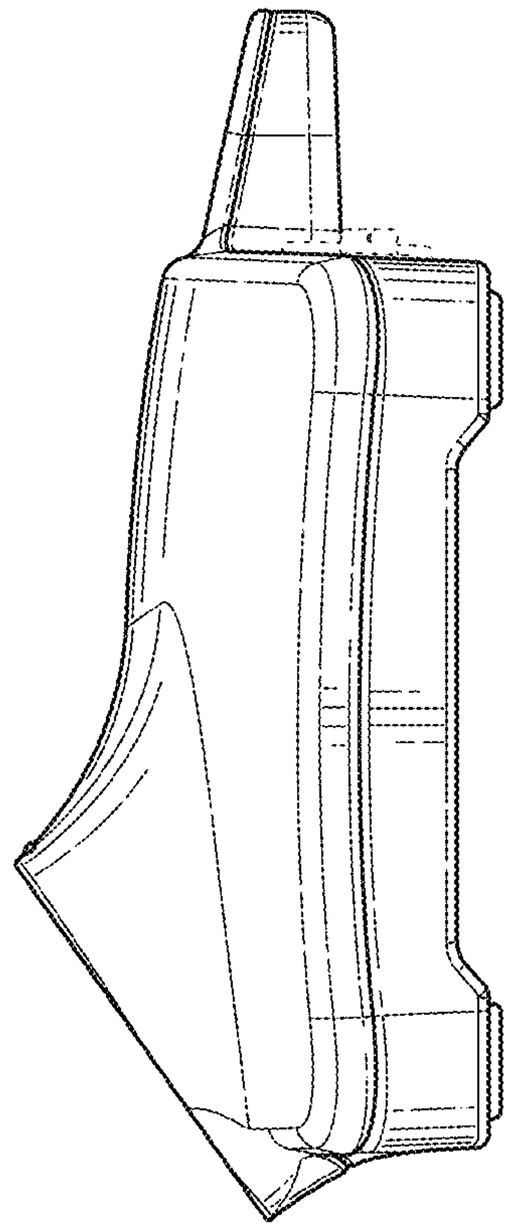

FIG. 26

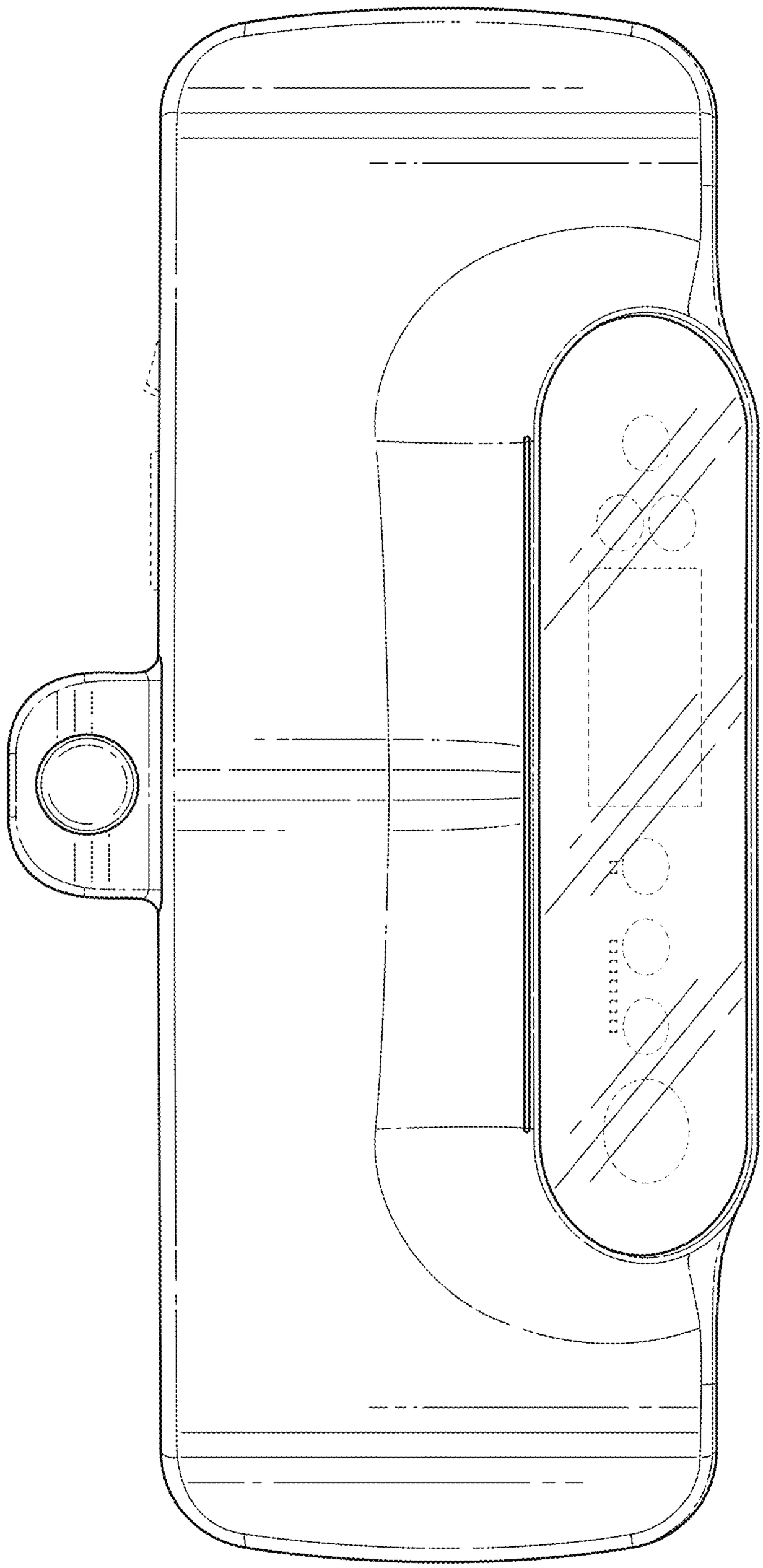

FIG. 27

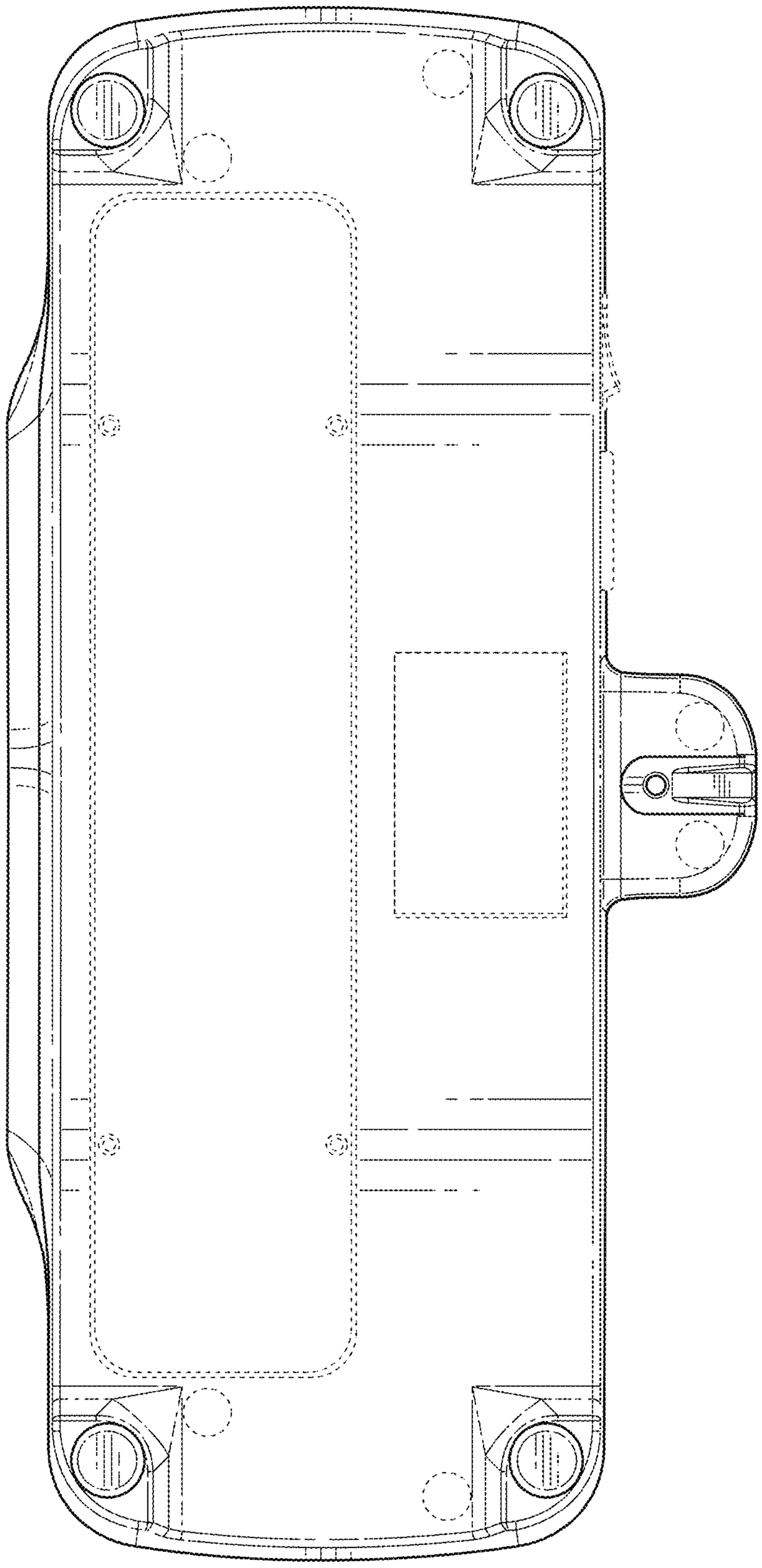

FIG. 28