US00D841710S

# (12) United States Design Patent
**Klassen**

(10) **Patent No.: US D841,710 S**
(45) **Date of Patent: ** Feb. 26, 2019**

(54) **ROBOTIC ARM**

(71) Applicant: **GENESIS ROBOTICS AND MOTION TECHNOLOGIES CANADA, ULC**, Langley (CA)

(72) Inventor: **James Brent Klassen**, Surrey (CA)

(73) Assignee: **GENESIS ROBOTICS AND MOTION TECHNOLOGIES CANADA, ULC**, Langley (CA)

(**) Term: **15 Years**

(21) Appl. No.: **29/613,712**

(22) Filed: **Aug. 11, 2017**

(30) **Foreign Application Priority Data**

Jul. 28, 2017 (CA) ..... 176118

(51) **LOC (11) Cl.** ..... **15-99**
(52) **U.S. Cl.**
USPC ..... **D15/199**
(58) **Field of Classification Search**
USPC ..... D15/199; D21/578–583, 621, 622
CPC ..... B25J 5/007; B60B 19/006; B62D 57/024; H01F 7/0221; Y10S 901/01
See application file for complete search history.

(56) **References Cited**

U.S. PATENT DOCUMENTS

D267,883 S * 2/1983 Susnjara ..... D15/122
D287,368 S * 12/1986 Shibayama ..... D15/122
D293,449 S * 12/1987 Kaufmann ..... D15/122
4,818,174 A * 4/1989 Arpiarian ..... B25J 19/025 338/15
D307,282 S * 4/1990 Suica ..... D15/199
D636,803 S * 4/2011 Nakagiri ..... D15/199
D642,352 S * 7/2011 Chen ..... D34/28
D690,753 S * 10/2013 Liu ..... D15/199
D712,447 S * 9/2014 He ..... D15/199
9,126,332 B2 9/2015 Caron L'Ecuyer et al.
D749,223 S * 2/2016 Vargas ..... D24/185
D768,219 S * 10/2016 Kraus ..... D15/199
D778,971 S * 2/2017 Long ..... D15/199
D802,041 S * 11/2017 He ..... D15/199
(Continued)

OTHER PUBLICATIONS

"Artistic Robot Arm," <http://www.pinterest.ca/a_essam/robots>, 1-page brochure, at least as early as Oct. 2016.
(Continued)

*Primary Examiner* — Patricia A Palasik

(57) **CLAIM**

The ornamental design for a robotic arm, as shown and described.

**DESCRIPTION**

FIG. **1** is a right side view of a robotic arm in accordance with the present design;
FIG. **2** is a right side view of the robotic arm shown in FIG. **1** in a first moved position;
FIG. **3** is a top perspective view of the robotic arm shown in FIG. **1**, in a second moved position;
FIG. **4** is a right-front perspective view of the robotic arm shown in FIG. **1**, in the second moved position;
FIG. **5** is a right side view of the robotic arm shown in FIG. **1**, in a third moved position;
FIG. **6** is a right back perspective view of the robotic arm shown in FIG. **1**, in a fourth moved position; and,
FIG. **7** is a top back perspective view of the robotic arm shown in FIG. **1**, in a fourth moved position.

**1 Claim, 7 Drawing Sheets**

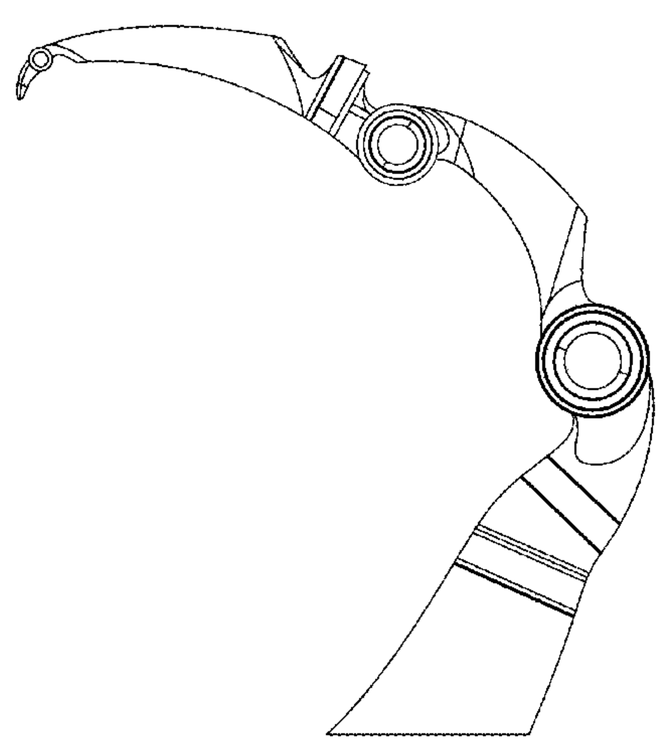

(56) **References Cited**

U.S. PATENT DOCUMENTS

| | | | | |
|---|---|---|---|---|
| 2015/0257838 | A1* | 9/2015 | Huet | A61B 17/16 606/80 |
| 2015/0258689 | A1* | 9/2015 | Suzuki | B25J 9/1697 700/259 |
| 2015/0277426 | A1* | 10/2015 | Ogata | B25J 9/1694 700/253 |
| 2015/0285721 | A1* | 10/2015 | Watanabe | G01B 21/00 73/788 |
| 2015/0306770 | A1* | 10/2015 | Mittal | B25J 5/007 700/255 |
| 2015/0379171 | A1* | 12/2015 | Kuwahara | G06F 17/5009 703/13 |
| 2016/0081753 | A1* | 3/2016 | Kostrzewski | A61B 34/25 606/130 |
| 2016/0229058 | A1* | 8/2016 | Pinter | G06Q 50/22 |
| 2016/0263749 | A1* | 9/2016 | Ogata | B25J 13/085 |
| 2016/0271803 | A1* | 9/2016 | Stewart | B25J 11/0085 |
| 2016/0332303 | A1* | 11/2016 | Kirihara | B25J 9/1653 |
| 2017/0348062 | A1* | 12/2017 | Sweeney, II | A61B 34/32 |
| 2018/0021950 | A1* | 1/2018 | Shimodaira | B25J 9/1633 |
| 2018/0071912 | A1* | 3/2018 | Rouaud | B25J 9/102 |
| 2018/0078332 | A1* | 3/2018 | Mozes | A61B 34/20 |
| 2018/0093133 | A1* | 4/2018 | Decarlo | A61B 5/6895 |
| 2018/0104829 | A1* | 4/2018 | Altman | B25J 19/005 |

OTHER PUBLICATIONS

"Atomic Art Robot Arm," <http://stuffuni.blogspot.ca/2013/02/robot-assignment.html>, 1-page brochure, at least as early as Oct. 2017.
"Darth Vader Robotic Arm," <http://www.gadgetreview.com/darth-vader-robotic-arm>, 1-page brochure, at least as early as Oct. 2015.
"Moley Robotic Chef Design Boom," <http://www.designboom.com/technology/moley-robotic-kitchen-chef-12-07-2015>; 1-page brochure, at least as early as Oct. 2017.
"Motor Joint Integrated Robot Arm," <http://www.robotshop.com/en/robot-arm-mover4-starter-set.html>, 1-page brochure, at least as early as Oct. 2017.
"Robot Arm," <http://alcalde.texasexes.org/robots/standard.html>, 1-page brochure, at least as early as Oct. 2017.
"Robotic Arm With Three Axis Wrist Rotation," <https://www.quora.com/What-are-the-restrictions-on-a-robotic-arm-in-order-to-mimic-human-arm-motions>, 1-page brochure, at least as early as Oct. 2015.
"Epson 3C: Compact 6 Axis Robots," Epson Robots, Carson, Calif., < http://robots.epson.com/product-detail/10>, 3-page brochure, at least as early as Oct. 2016.
"Robot Hardware Overview," Fetch Robotics: Fetch & Freight Blog, <http://docs.fetchrobotics.com/robot_hardware.html>, 11-page brochure, at least as early as Oct. 2016.

* cited by examiner

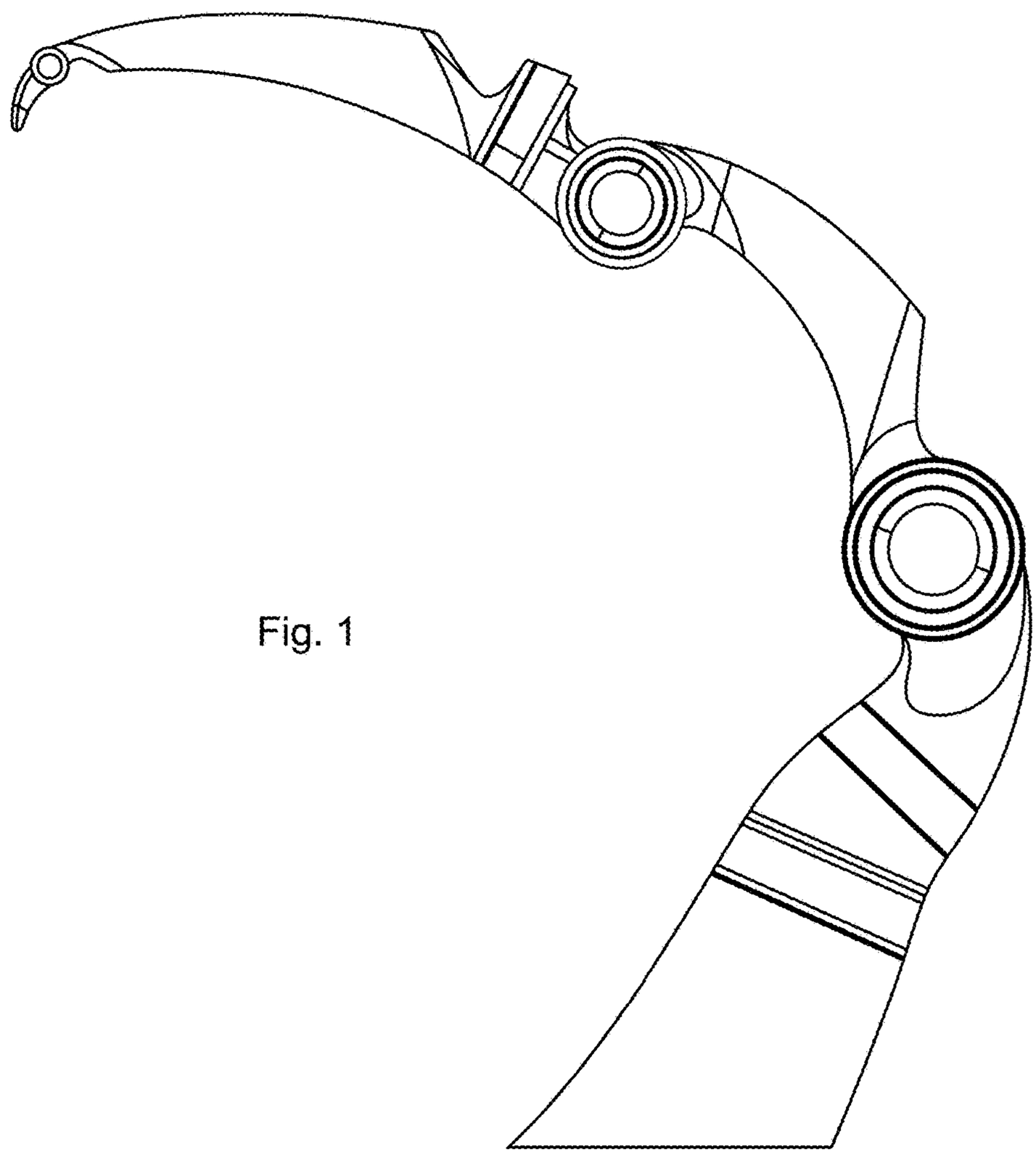

Fig. 1

Fig. 2

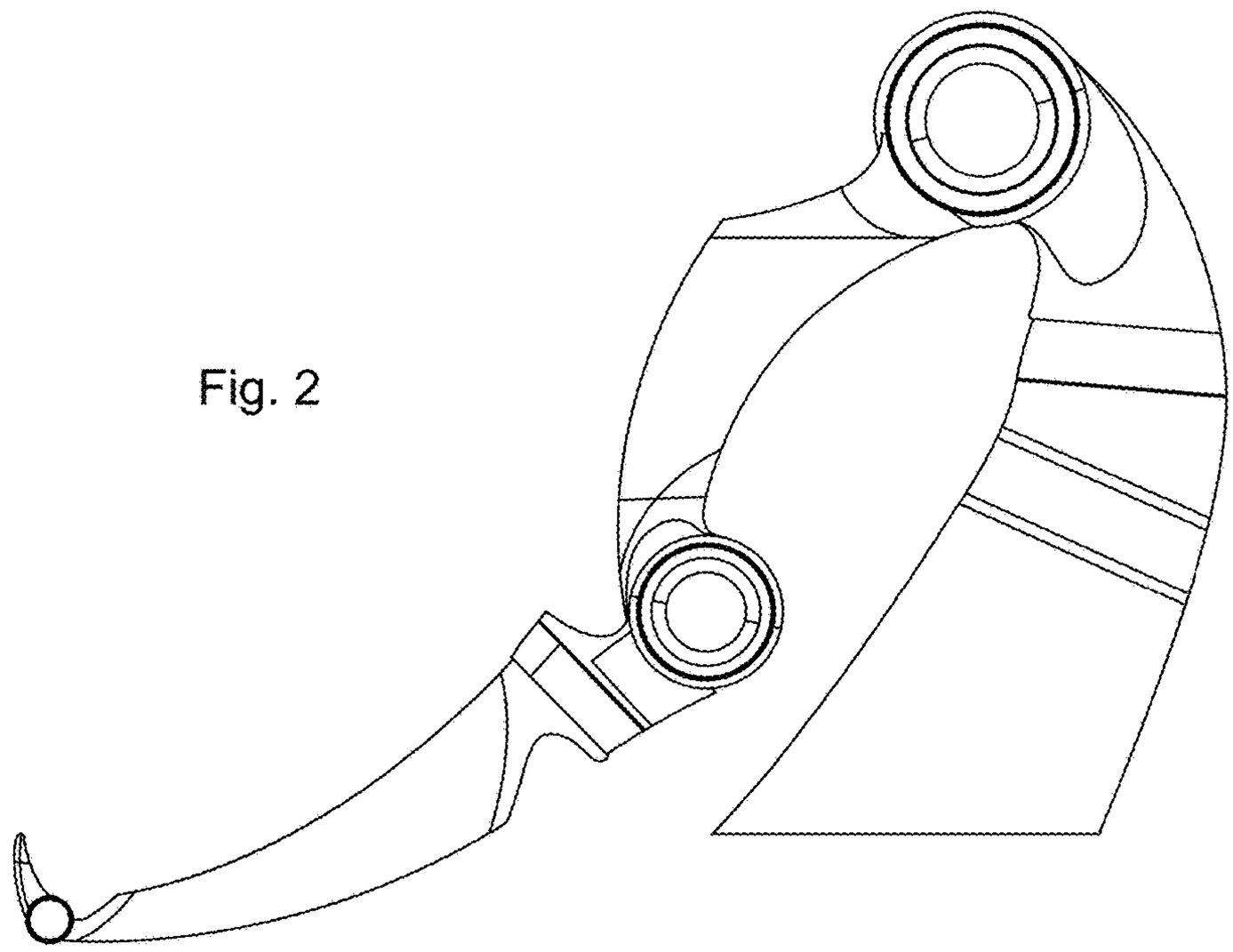

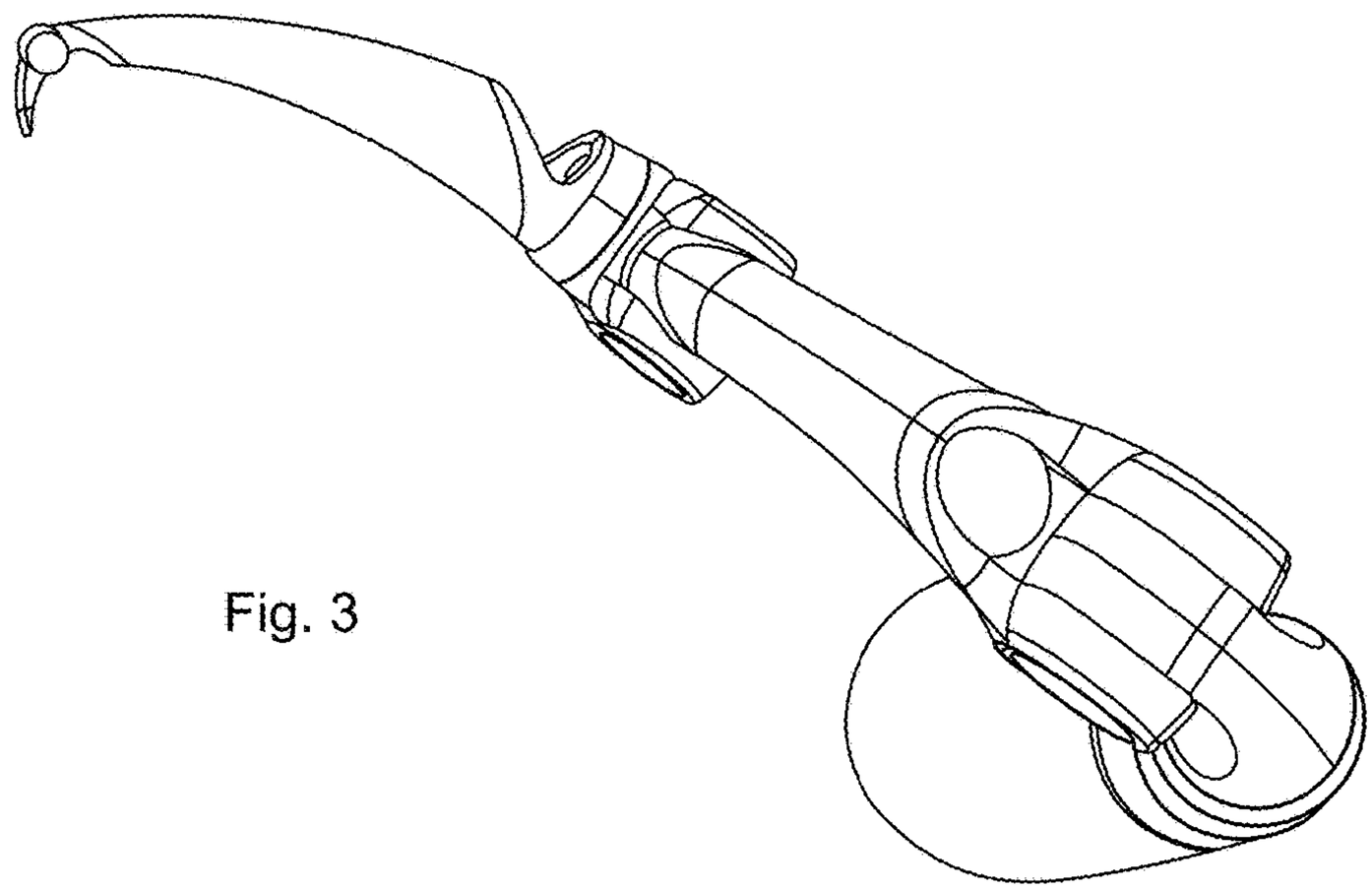

Fig. 3

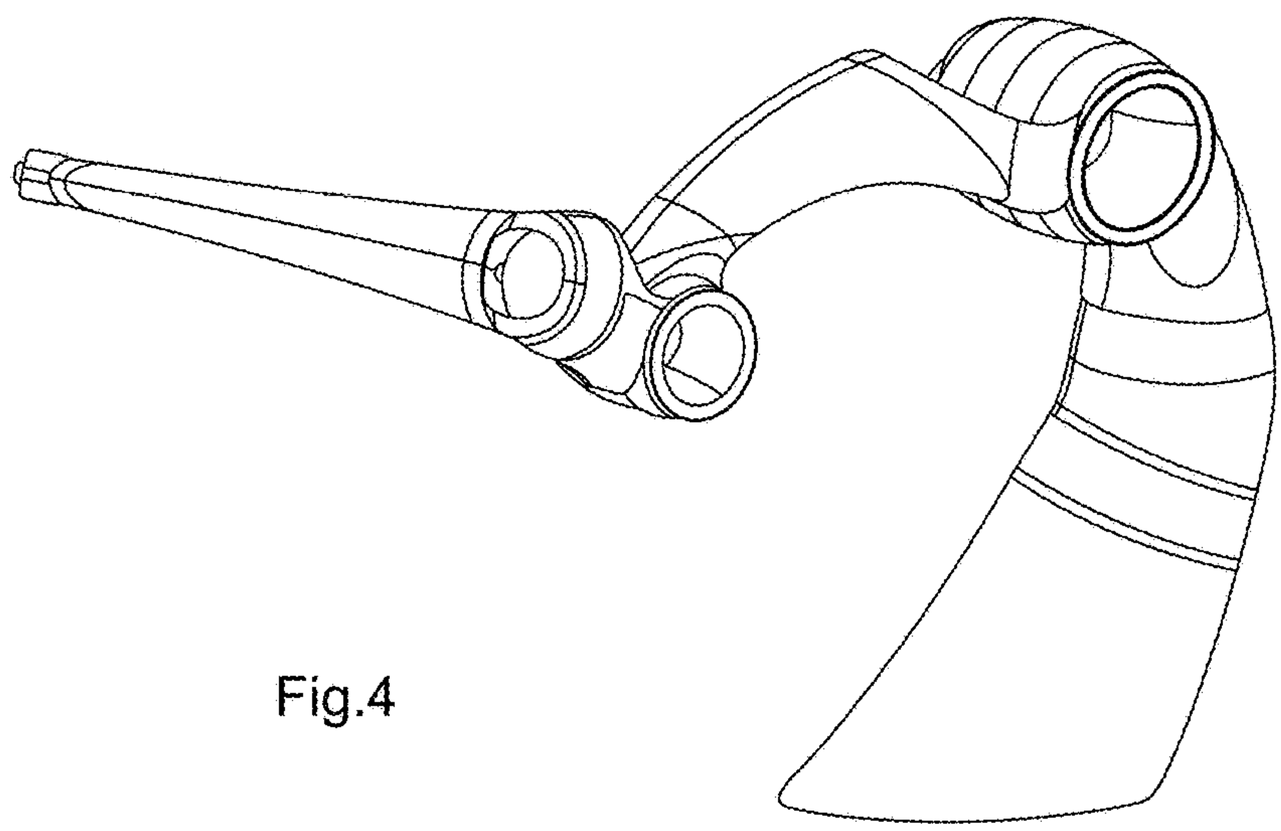

Fig.4

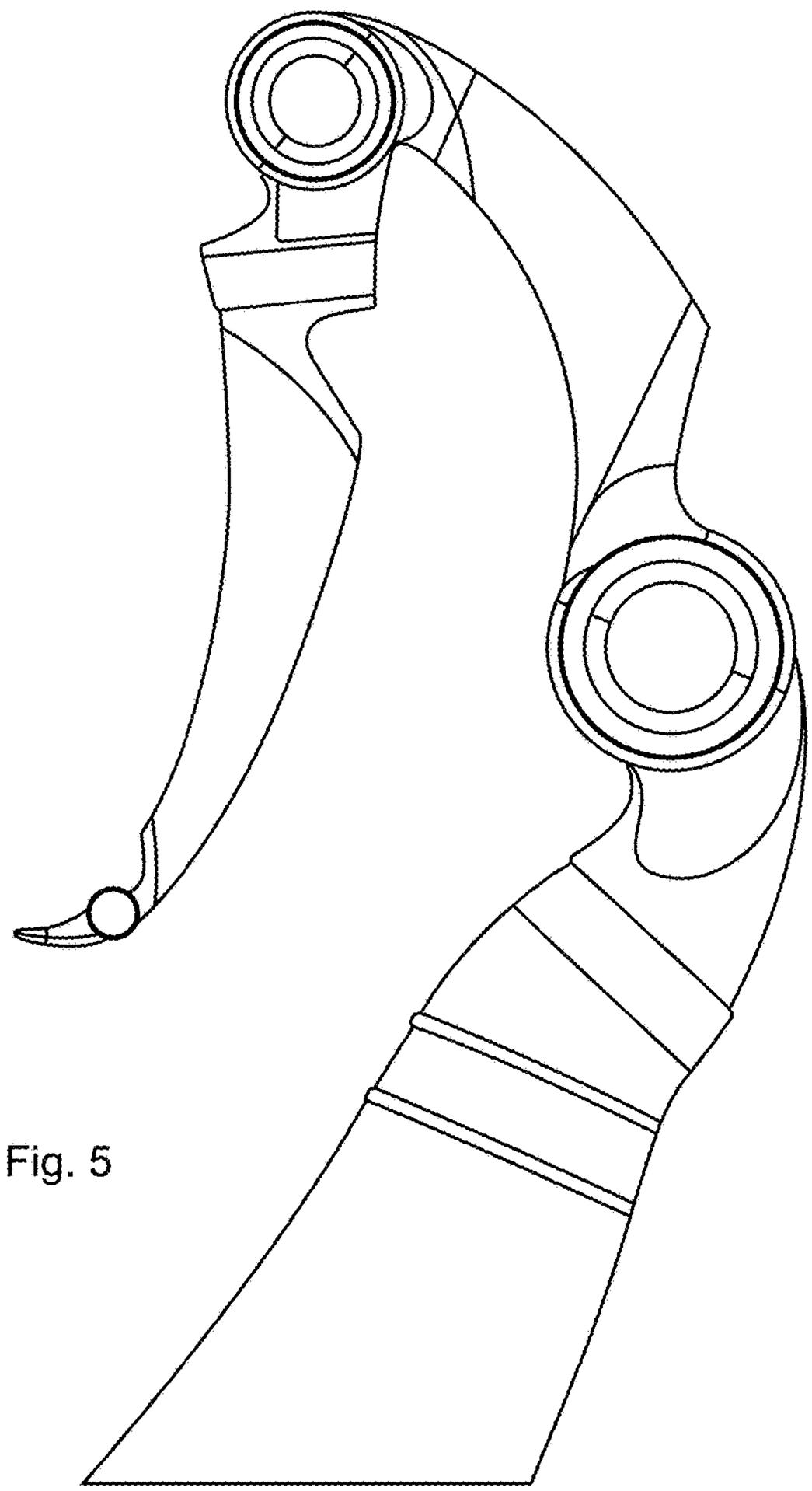

Fig. 5

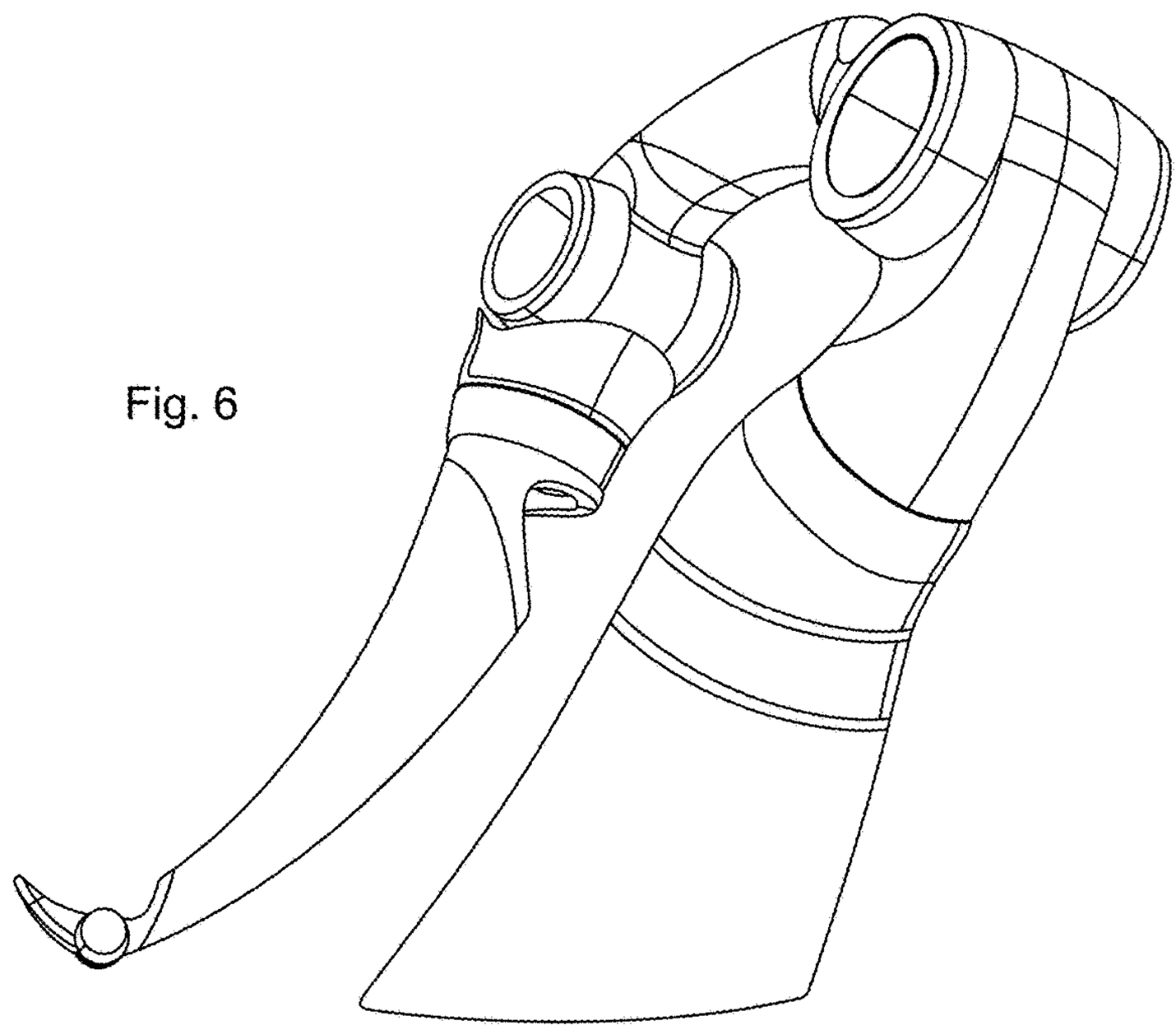

Fig. 6

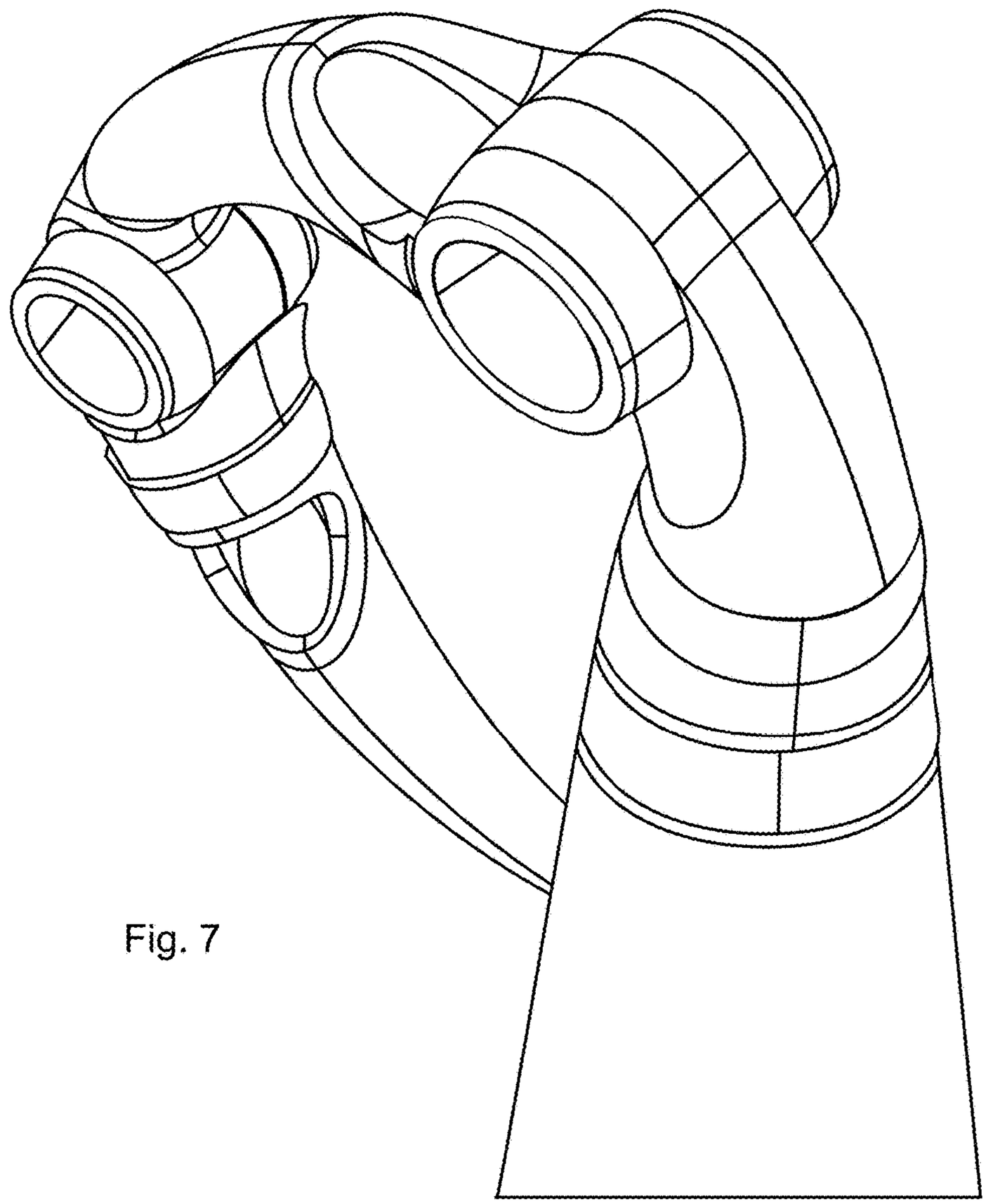

Fig. 7