US00D841196S

(12) **United States Design Patent**
Thompson

(10) **Patent No.: US D841,196 S**
(45) **Date of Patent: ** Feb. 19, 2019**

(54) **CANDLE WRAP WITH TRANSPARENCY GRADIENT**

(71) Applicant: **Peter Thompson**, Huntington Beach, CA (US)

(72) Inventor: **Peter Thompson**, Huntington Beach, CA (US)

(**) Term: **15 Years**

(21) Appl. No.: **29/548,620**

(22) Filed: **Dec. 15, 2015**

(51) **LOC (11) Cl.** **26-01**

(52) **U.S. Cl.**
USPC **D26/23**; D9/713

(58) **Field of Classification Search**
USPC D26/9, 10, 23; D5/7, 10, 63, 99; D9/433, 434, 444, 499, 401, 702, 711, D9/713
CPC C11C 5/00; C11C 5/006; C11C 5/008
See application file for complete search history.

(56) **References Cited**

U.S. PATENT DOCUMENTS

3,286,492 A * 11/1966 Frazier, Jr. C11C 5/008 40/541
D438,563 S * 3/2001 Webb D19/10
(Continued)

Primary Examiner — Ian Simmons
Assistant Examiner — Keith Frank
(74) *Attorney, Agent, or Firm* — Umberg Zipser LLP

(57) **CLAIM**

The ornamental design for a candle wrap with transparency gradient, as shown and described.

DESCRIPTION

FIG. **1** is a perspective view of a first embodiment of a candle wrap with a transparency gradient.

FIG. **2** is a front view of a first embodiment of a candle wrap with a transparency gradient, which is visually the same as the back view of the same embodiment.

FIG. **3** is a right side view of a first embodiment of a candle wrap with a transparency gradient, which is visually the same as the left side view of the same embodiment.

FIG. **4** is a top view of a first embodiment of a candle wrap with a transparency gradient, which is visually the same as the bottom view of the same embodiment.

FIG. **5** is a perspective view of a second embodiment of a candle wrap with a transparency gradient.

FIG. **6** is a front view of a second embodiment of a candle wrap with a transparency gradient, which is visually the same as the back view of the same embodiment.

FIG. **7** is a right side view of a second embodiment of a candle wrap with a transparency gradient, which is visually the same as the left side view of the same embodiment.

FIG. **8** is a top view of a second embodiment of a candle wrap with a transparency gradient, which is visually the same as the bottom view of the same embodiment.

FIG. **9** is a perspective view of a third embodiment of a candle wrap with a transparency gradient.

FIG. **10** is a front view of a third embodiment of a candle wrap with a transparency gradient, which is visually the same as the back view of the same embodiment.

FIG. **11** is a right side view of a third embodiment of a candle wrap with a transparency gradient, which is visually the same as the left side view of the same embodiment.

FIG. **12** is a top view of a third embodiment of a candle wrap with a transparency gradient, which is visually the same as the bottom view of the same embodiment.

FIG. **13** is a perspective view of a fourth embodiment of a candle wrap with a transparency gradient.

FIG. **14** is a front view of a fourth embodiment of a candle wrap with a transparency gradient, which is visually the same as the back view of the same embodiment.

FIG. **15** is a right side view of a fourth embodiment of a candle wrap with a transparency gradient, which is visually the same as the left side view of the same embodiment.

FIG. **16** is a top view of a fourth embodiment of a candle wrap with a transparency gradient, which is visually the same as the bottom view of the same embodiment.

FIG. **17** is a perspective view of a fifth embodiment of a candle wrap with a transparency gradient.

(Continued)

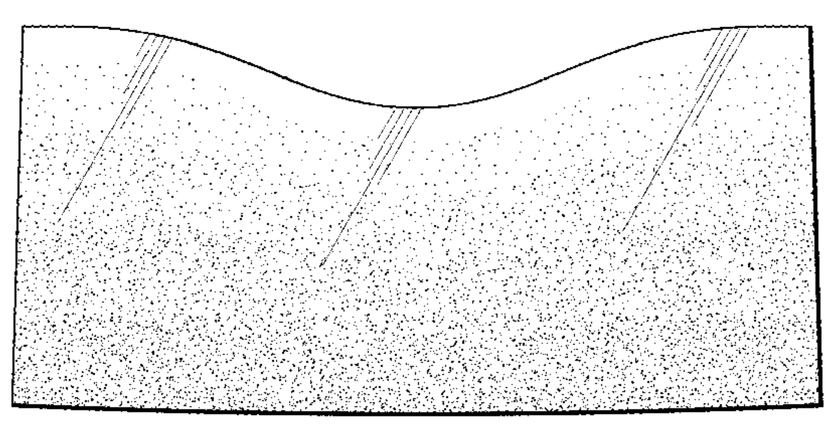

FIG. **18** is a front view of a fifth embodiment of a candle wrap with a transparency gradient, which is visually the same as the back view of the same embodiment.
FIG. **19** is a right side view of a fifth embodiment of a candle wrap with a transparency gradient, which is visually the same as the left side view of the same embodiment; and,
FIG. **20** is a top view of a fifth embodiment of a candle wrap with a transparency gradient, which is visually the same as the bottom view of the same embodiment.
The dominant feature of my design resides in the transparency gradient of a candle wrap. In addition, the bottom edge of the wrap has a slight radius, as seen in FIGS. **2**, **6**, **10**, **14**, and **18**. Moreover, FIGS. **1-20** all conform to a first shape. Each of the embodiments has a different opacity gradient, where each individual embodiment transitions from fully transparent at the top, to fully opaque some distance down from the top.

1 Claim, 5 Drawing Sheets

(56) **References Cited**

U.S. PATENT DOCUMENTS

D442,627 S * 5/2001 Webb D14/437
D444,953 S * 7/2001 Marecki D5/99
D446,946 S * 8/2001 Shusta D5/99
6,406,290 B1 * 6/2002 Chon C11C 5/008 156/215
D553,675 S * 10/2007 Hogg D19/10
D569,423 S * 5/2008 Lasch D19/10
D587,366 S * 2/2009 Turkat D24/122
D587,907 S * 3/2009 Vandenberg D5/56
D594,663 S * 6/2009 Vandenberg D5/63
D625,614 S * 10/2010 Duhon D9/713
D659,268 S * 5/2012 Vincenzetti D26/23
D662,785 S * 7/2012 Kern D32/55
D675,106 S * 1/2013 Powers D9/434
D675,442 S * 2/2013 Hawkins D3/304
D678,764 S * 3/2013 Powers D9/434
D706,630 S * 6/2014 Merchant D9/434
D736,086 S * 8/2015 Markle D9/434
D739,241 S * 9/2015 Markle D9/434
D751,386 S * 3/2016 Markle D9/434
D751,387 S * 3/2016 Markle D9/434
D751,390 S * 3/2016 Markle D9/434
D766,366 S * 9/2016 Canaday D19/9
2001/0043467 A1 * 11/2001 Carpenter B44O 1/10 362/84
2002/0179617 A1 * 12/2002 Barthlow A47G 23/0216 220/739

* cited by examiner

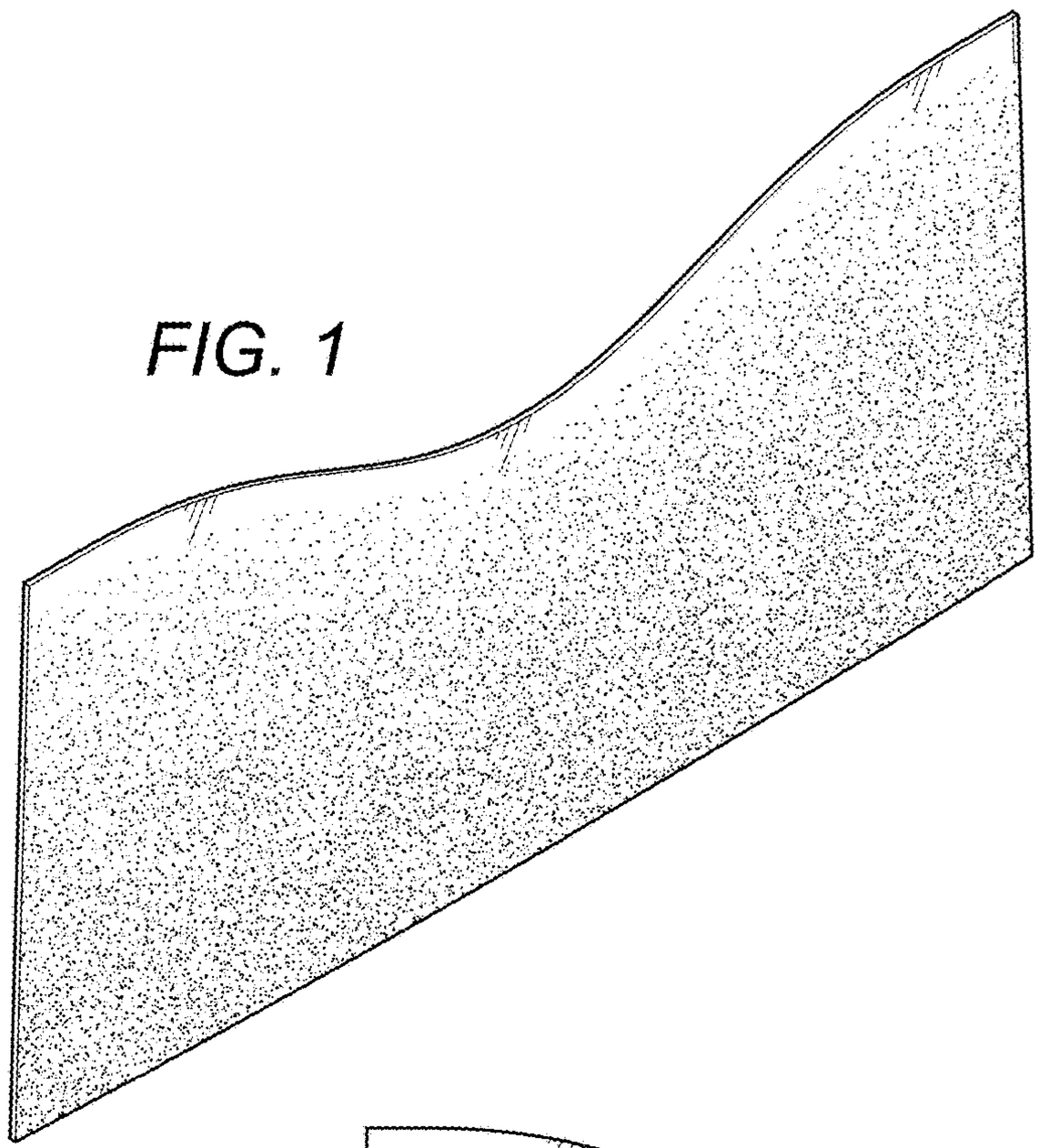

FIG. 1

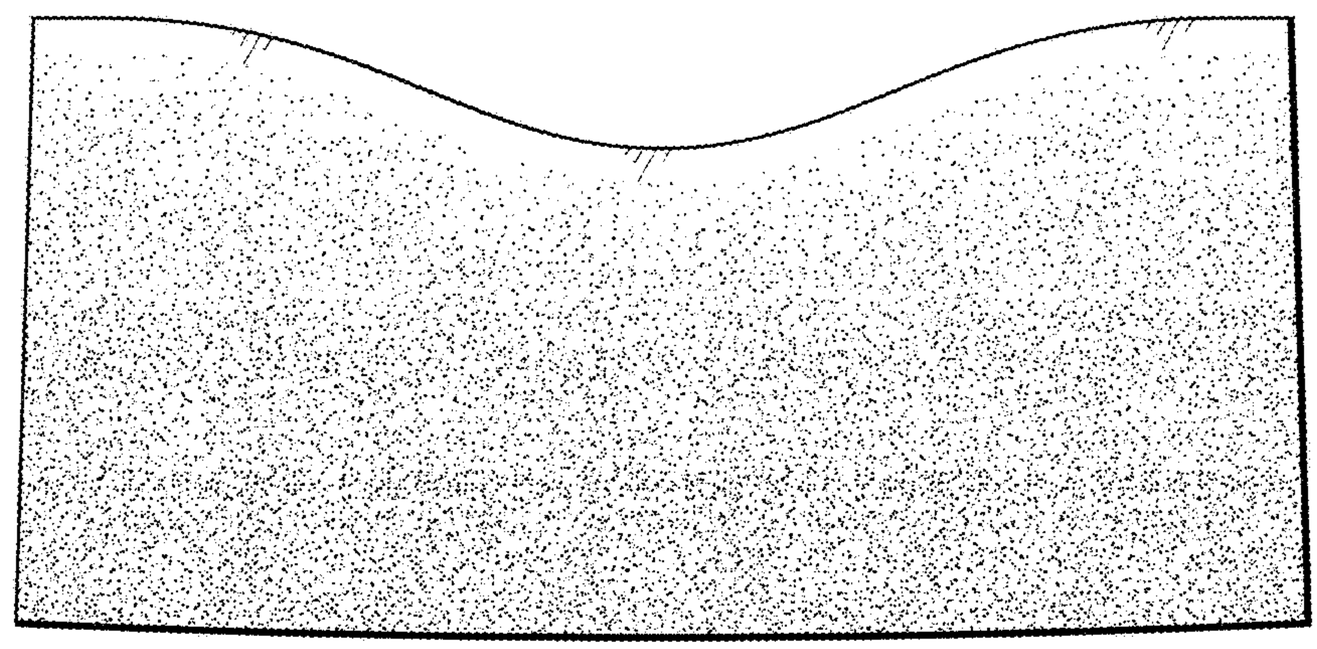

FIG. 2

FIG. 3

FIG. 4

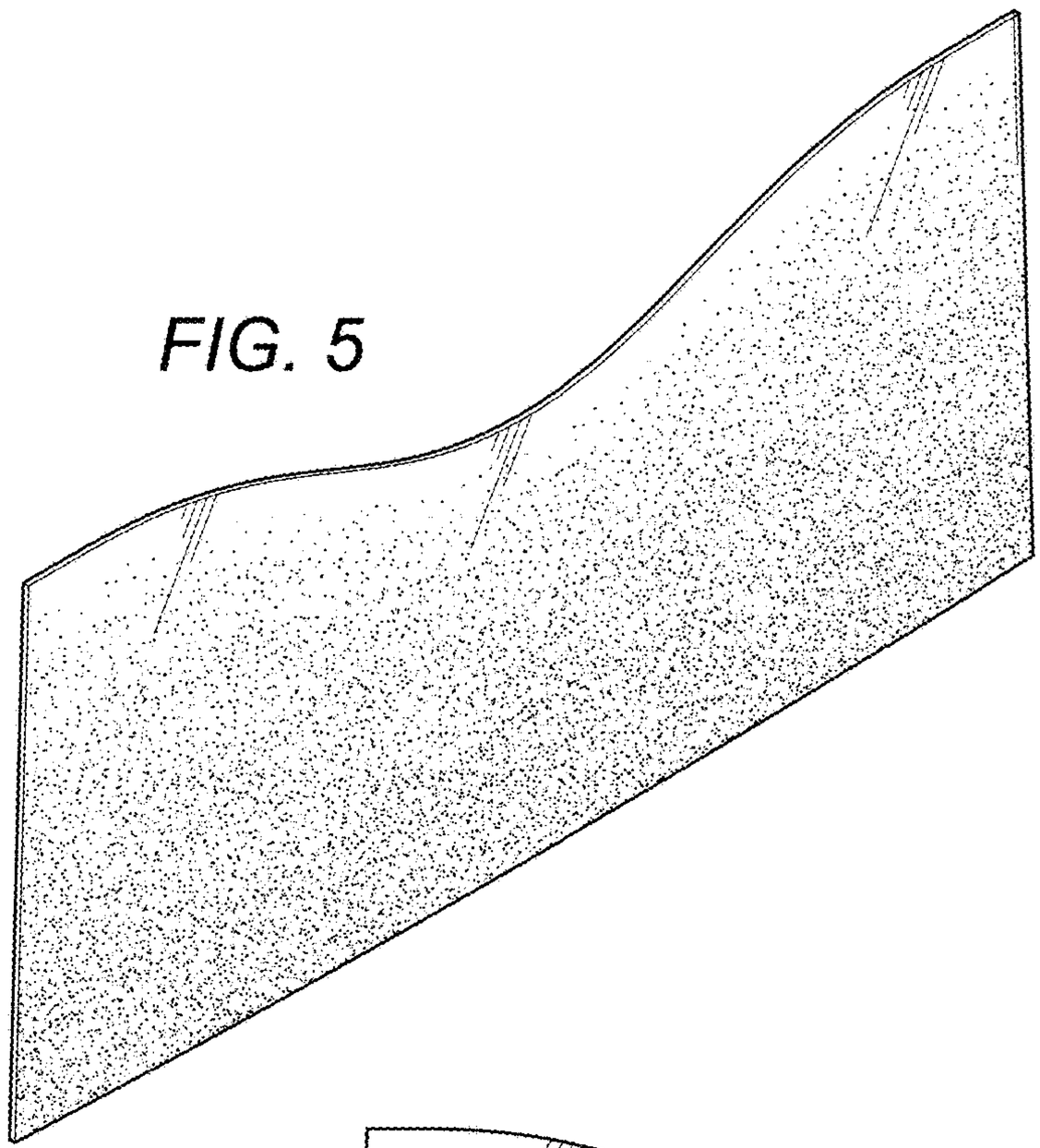

FIG. 5

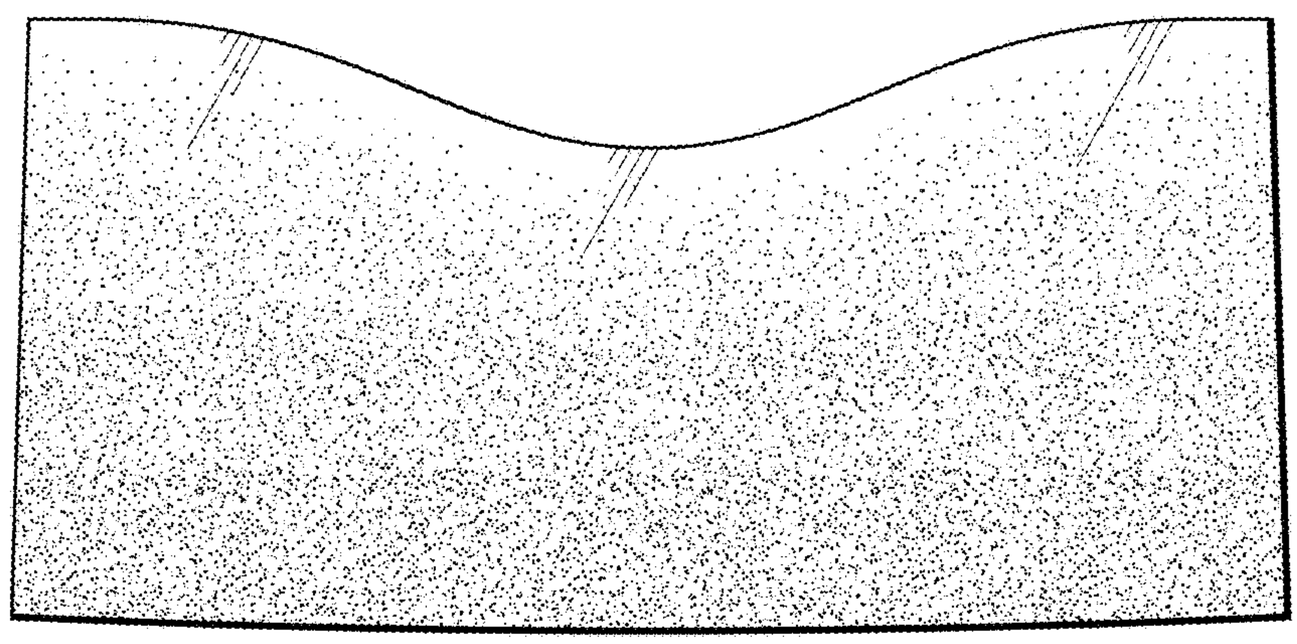

FIG. 6

FIG. 7

FIG. 8

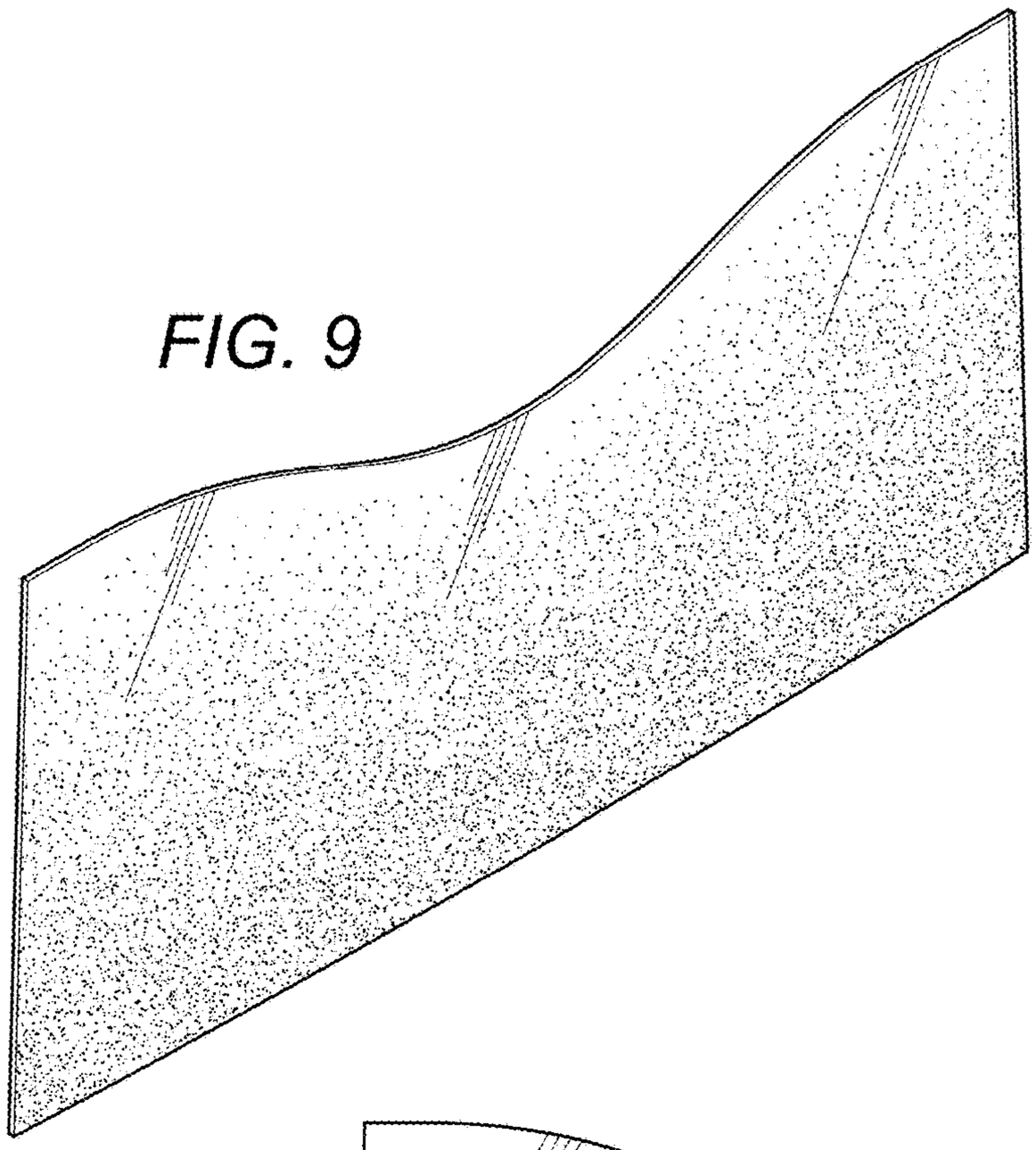

FIG. 9

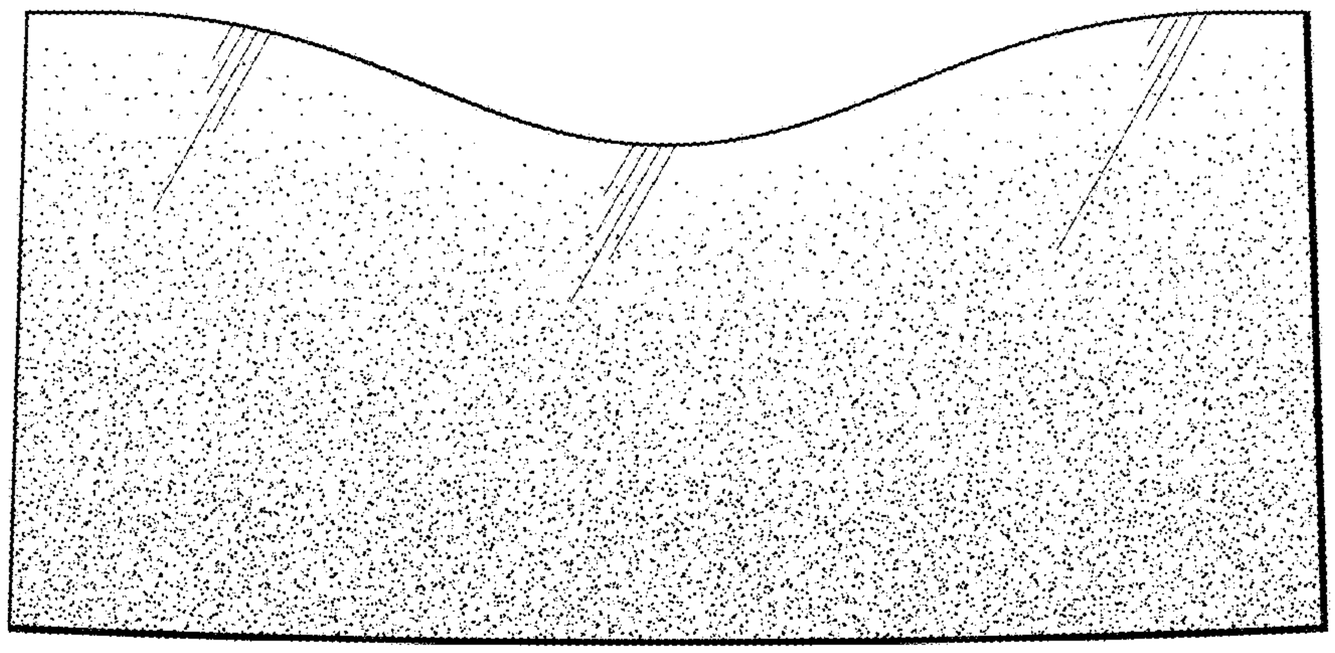

FIG. 10

FIG. 11

FIG. 12

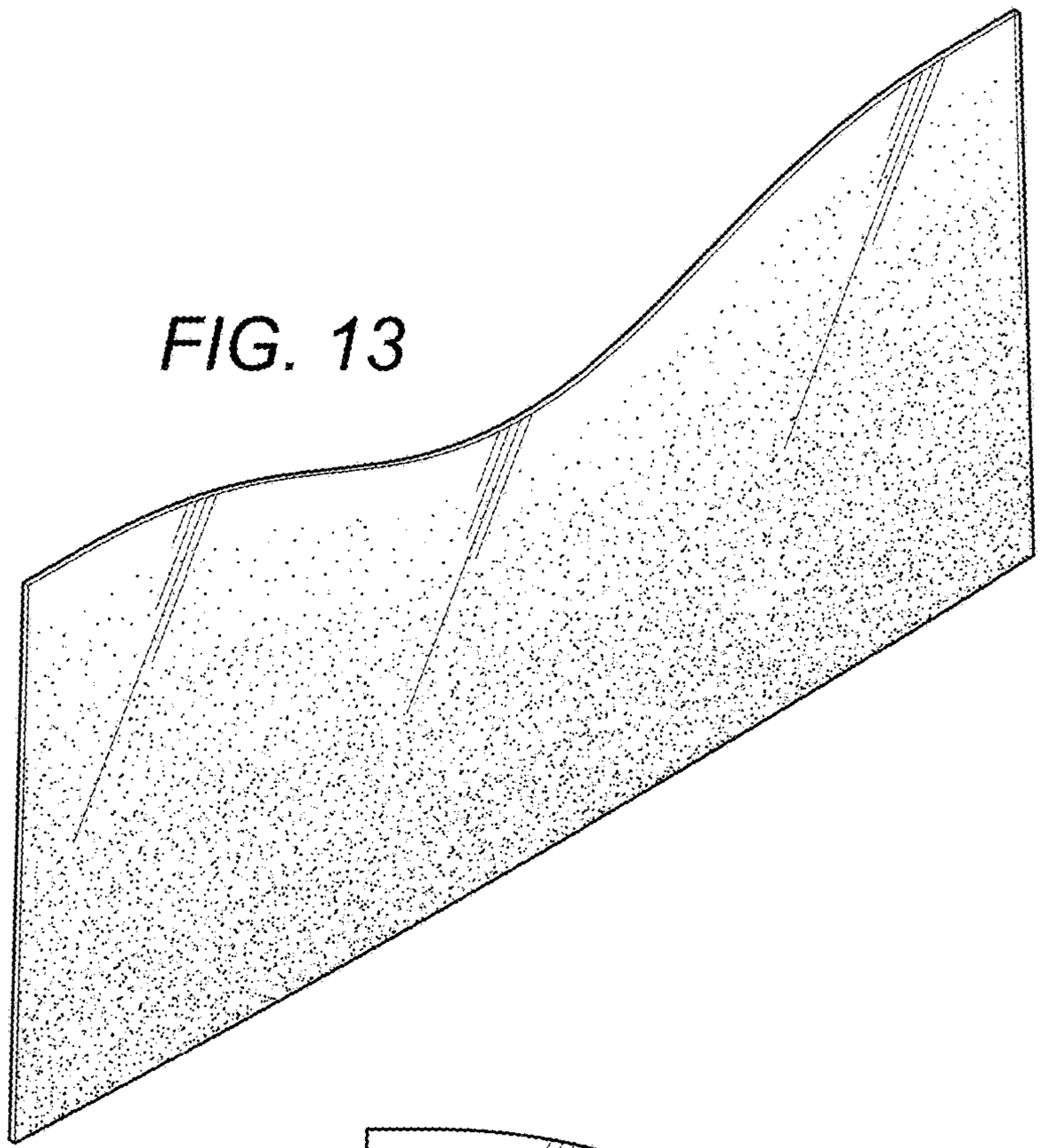

FIG. 13

FIG. 14

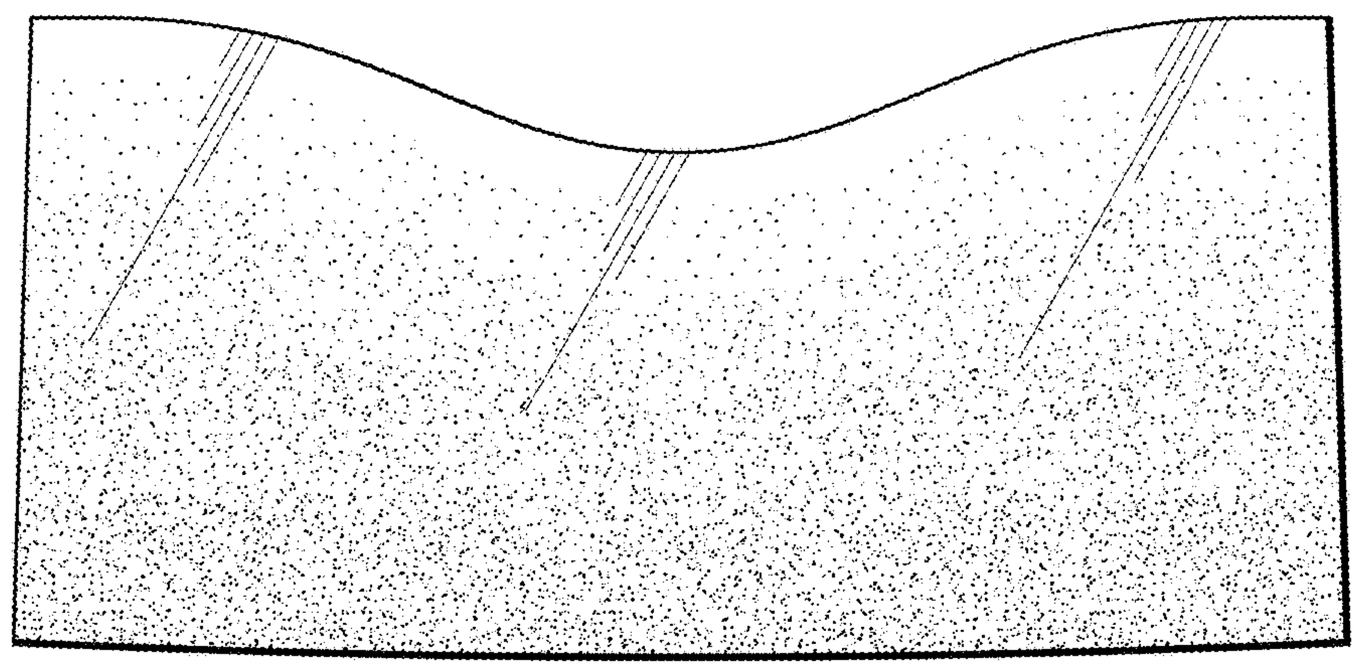

FIG. 15

FIG. 16

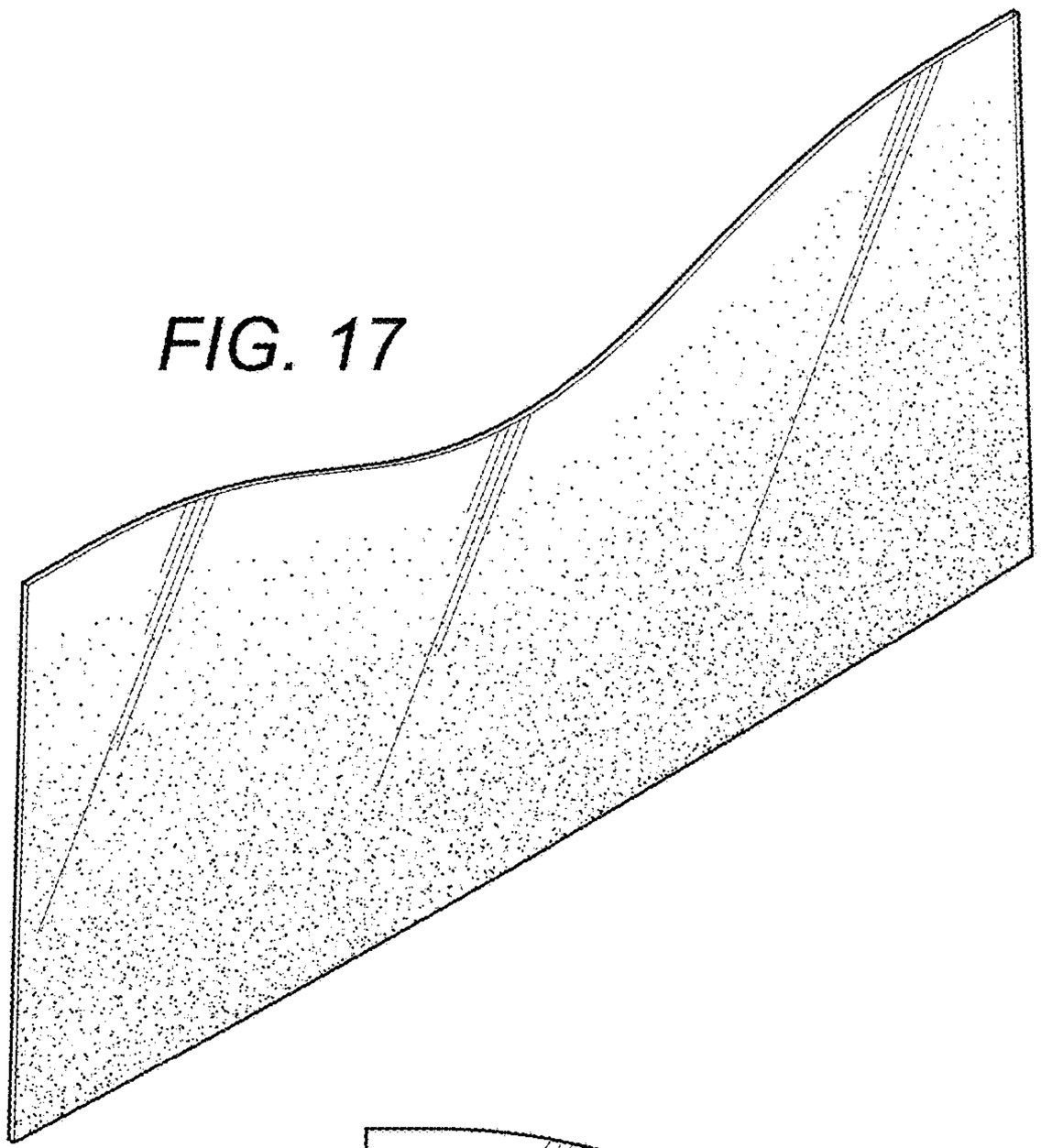

FIG. 17

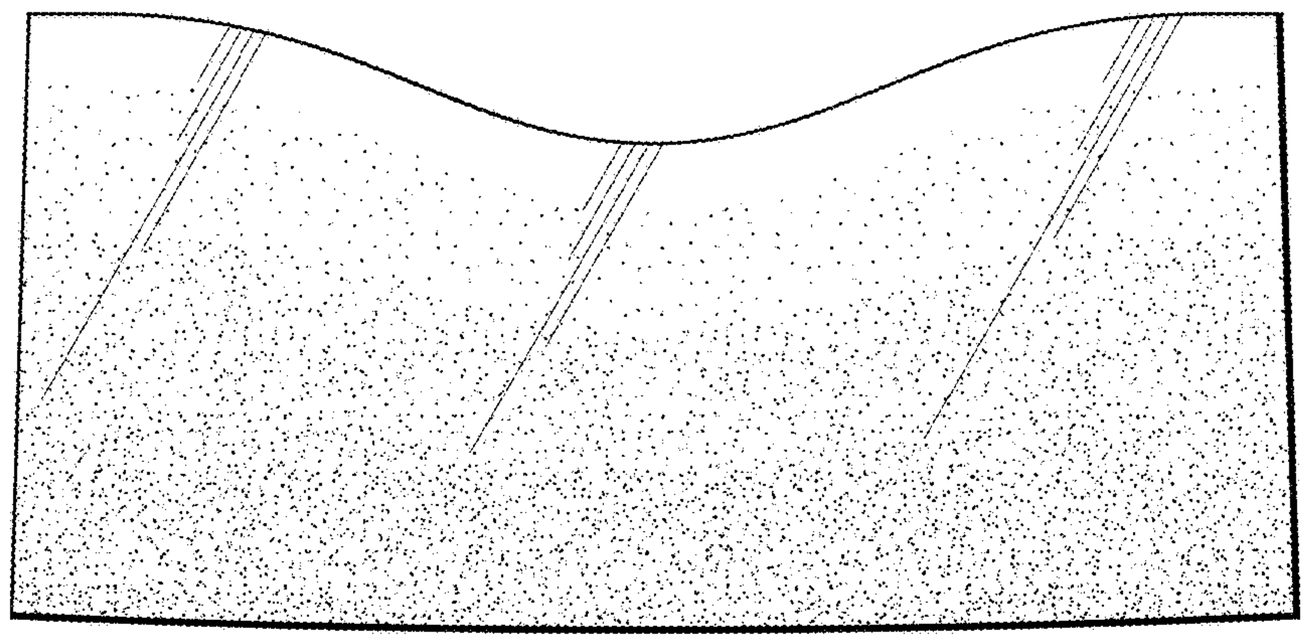

FIG. 18

FIG. 19

FIG. 20