US00D839493S

(12) United States Design Patent

Cantwell et al.

(10) Patent No.: US D839,493 S
(45) Date of Patent: ** Jan. 29, 2019

(54) **LATCH CLIP FOR A DOOR ASSEMBLY OF AN ANIMAL ENCLOSURE**

(71) Applicant: **Mid-West Metal Products Company, Inc.**, Muncie, IN (US)

(72) Inventors: **Brad Cantwell**, Muncie, IN (US); **Stew Kerr**, Muncie, IN (US); **Michael E. Greene**, Muncie, IN (US); **David J. Nolley**, Muncie, IN (US)

(73) Assignee: **MID-WEST METAL PRODUCTS COMPANY, INC.**, Muncie, IN (US)

(**) Term: **15 Years**

(21) Appl. No.: **29/575,489**

(22) Filed: **Aug. 25, 2016**

(51) **LOC (11) Cl.** **30-02**

(52) **U.S. Cl.**
USPC **D30/119**

(58) **Field of Classification Search**
USPC D30/108, 109, 112–117, 119; D8/331, D8/339, 340, 394, 395; 119/452, 453, 119/459, 461, 462, 467, 473–475, 119/480–482, 484, 485, 498, 501, 537, 119/700, 702–704, 706, 707, 843, 847; 292/74, 101, 106, 120, 128, 145, 150, 292/175, 277, 302
CPC A01K 1/0017; A01K 1/0245; A01K 1/033; A01K 1/034; B65D 19/10; E06B 11/021
See application file for complete search history.

(56) **References Cited**

U.S. PATENT DOCUMENTS

D26,541 S 1/1897 Covert
1,469,595 A 10/1923 Hick
1,574,688 A * 2/1926 Plummer E06B 11/021 160/328
1,894,895 A 1/1933 Beevor et al.
D89,923 S 5/1933 Robison
2,320,067 A 5/1943 Caughren
2,491,515 A * 12/1949 Orchard A47G 29/06 248/302
D218,874 S 9/1970 Whittaker
(Continued)

OTHER PUBLICATIONS

"Guinea Pig Cages." Found online May 1, 2018 at www.guineapigcages.com. Image dated Jun. 17, 2011. Retrieved from URL: https://www.guineapigcages.com/forum/threads/62768-Dog-Crate-Restructure (Year: 2011).*

(Continued)

Primary Examiner — Garth Rademaker
Assistant Examiner — Katelin G Kloberg
(74) *Attorney, Agent, or Firm* — Taft Stettinius & Hollister LLP; Stephen F. Rost

(57) **CLAIM**

The ornamental design for a latch clip for a door assembly of an animal enclosure, as shown and described.

DESCRIPTION

FIG. **1** is a front perspective view of a latch clip for a door assembly of an animal enclosure showing our new design within an environmental use;
FIG. **2** is a front perspective view of a latch clip for a door assembly of an animal enclosure;
FIG. **3** is a front elevation view thereof;
FIG. **4** is a bottom plan view thereof;
FIG. **5** is a top plan view thereof;
FIG. **6** is a left side elevation view thereof;
FIG. **7** is a right side elevation view thereof; and,
FIG. **8** is a rear elevation view thereof.
The broken lines shown in FIG. **1** represent environmental subject matter that forms no part of the claimed design.

1 Claim, 3 Drawing Sheets

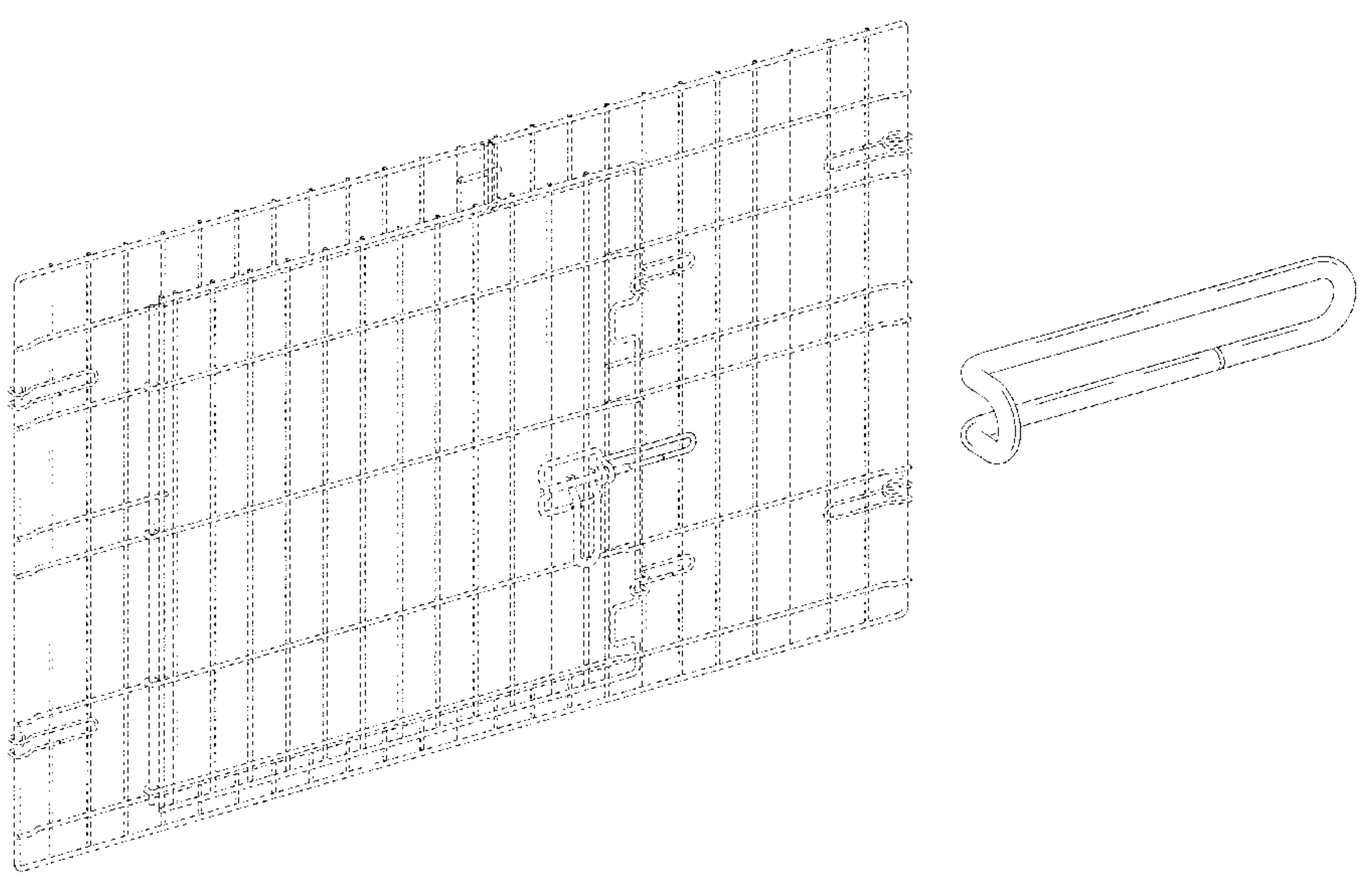

(56) **References Cited**

U.S. PATENT DOCUMENTS

4,781,147	A		11/1988	Delino, Jr.	
D300,804	S	*	4/1989	Myers	D34/5
5,373,810	A		12/1994	Martin	
D359,590	S	*	6/1995	Kohus	D30/114
D374,345	S		10/1996	Ostrosky	
D384,443	S		9/1997	Olfert	
5,996,955	A		12/1999	Chen	
D432,316	S	*	10/2000	Duggan	D6/317
6,230,655	B1		5/2001	Cohen et al.	
6,883,463	B2		4/2005	Link	
D552,980	S		10/2007	Svedberg	
D555,462	S	*	11/2007	Moffitt	D8/370
D639,937	S	*	6/2011	Gray	D24/128
D655,986	S	*	3/2012	Schneider	D6/566
8,141,517	B2		3/2012	Shimoda et al.	
D673,737	S		1/2013	Cantwell et al.	
D695,588	S		12/2013	Cantwell et al.	
D697,273	S		1/2014	Cantwell et al.	
D697,675	S		1/2014	Cheng-Lung et al.	
D706,617	S		6/2014	Hendricks	
D727,713	S	*	4/2015	Greene	D30/119
D741,160	S	*	10/2015	Hendricks	D8/394
D743,777	S	*	11/2015	Noel	D8/363
9,399,886	B2	*	7/2016	Link	E06B 3/52
D782,748	S	*	3/2017	Cantwell	D30/119

OTHER PUBLICATIONS

"Carlson Pet Products Secure and Foldable Single Door Metal Dog Crate." Found online Apr. 16, 2018 at www.amazon.com. Page dated Jun. 19, 2015. Retrieved from URL: https://www.amazon.com/dp/B00MYDZIBM/ref=cm_sw_su_dp (Year: 2015).*

"Lucky Dog Folding Black Wire 2 Door Training Crate". Found online Apr. 16, 2018 at www.walmart.com. Page dated Jun. 14, 2015. Retrieved from URL: https://www.walmart.com/ip/24-L-Lucky-Dog-Folding-Black-Wire-2-Door-Training-Crate/37055957 (Year: 2015).*

"Contour Dog Crates by MidWest Homes for Pets." Found online Apr. 16, 2018 at www.youtube.com. Page dated Jul. 22, 2016. Retrieved from URL: https://www.youtube.com/watch?v=vk-51JZyaus (Year: 2016).*

* cited by examiner

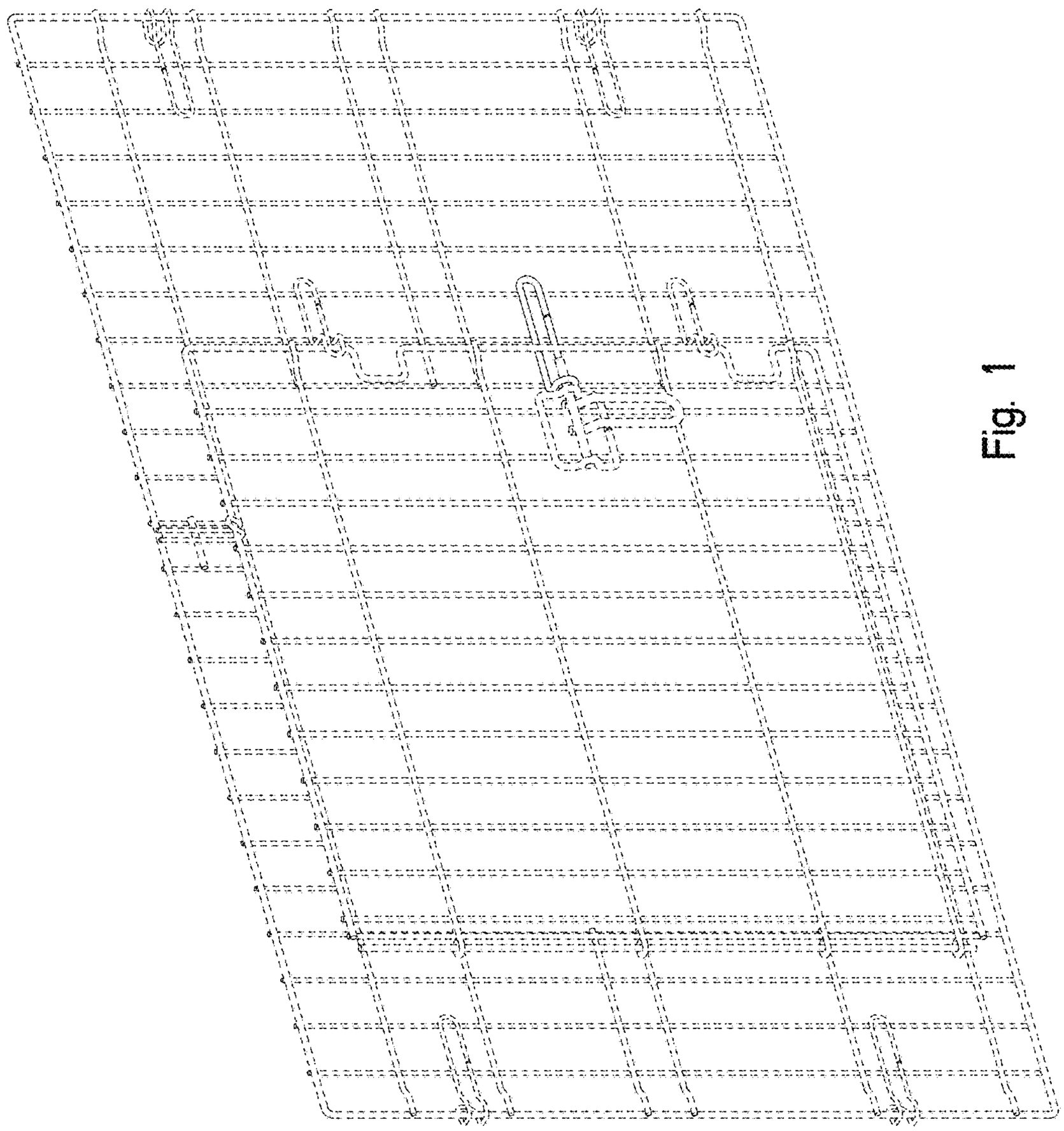

Fig. 1

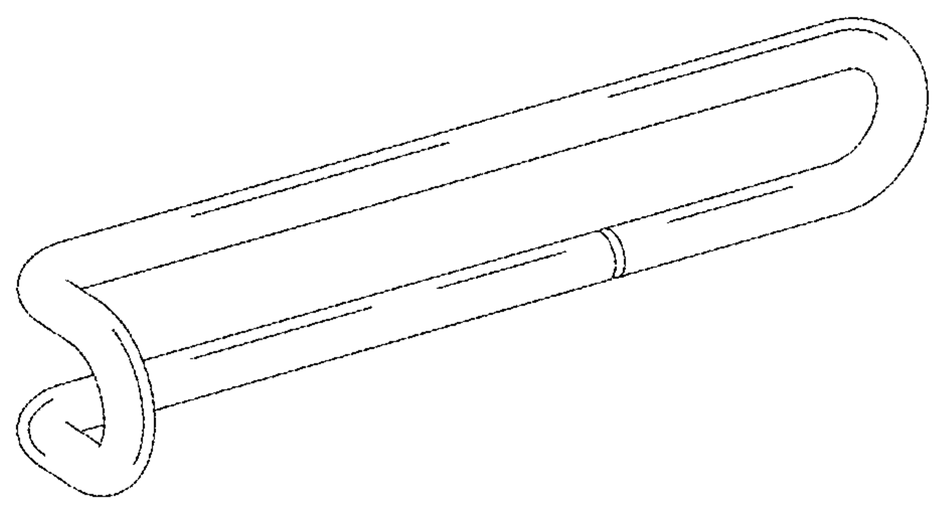

Fig. 2

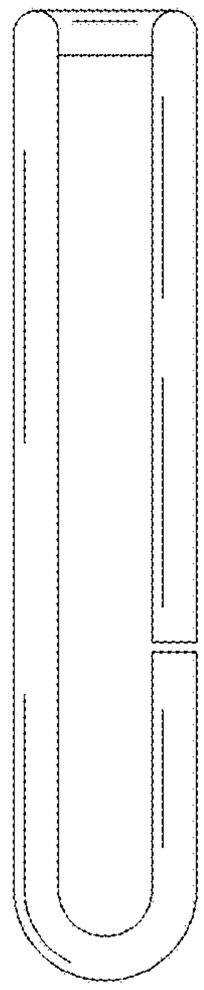

Fig. 8

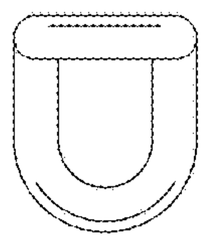

Fig. 6

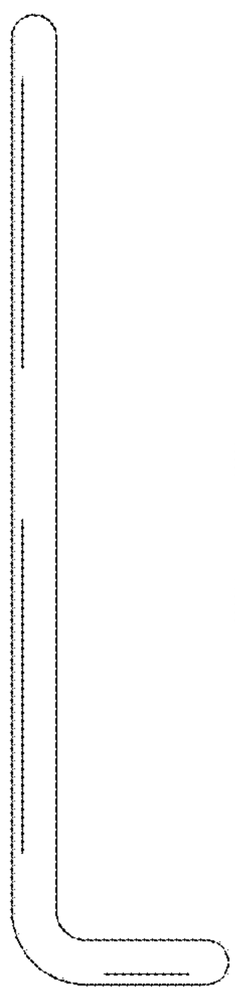

Fig. 5

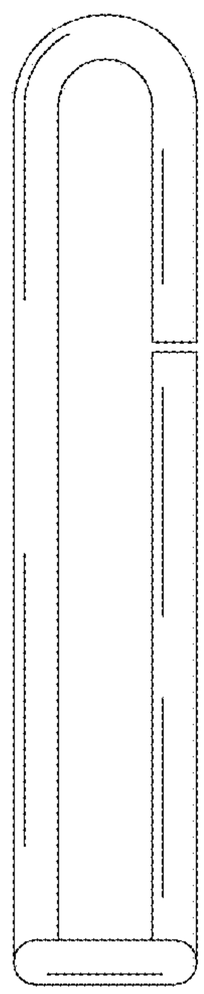

Fig. 3

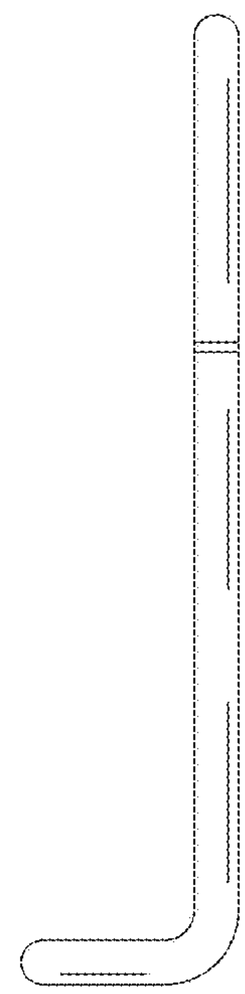

Fig. 4

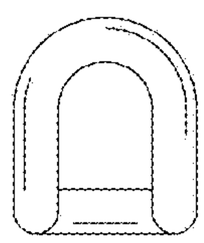

Fig. 7