US00D838303S

(12) United States Design Patent

Brunner et al.

(10) Patent No.: US D838,303 S
(45) Date of Patent: ** Jan. 15, 2019

(54) **CAMERA**

(71) Applicant: **C & A Marketing, Inc.**, Edison, NJ (US)

(72) Inventors: **Robert Dennis Brunner**, San Francisco, CA (US); **Jonas Alexander Lagerstedt**, San Francisco, CA (US); **Zeke Joseph Seminario**, San Francisco, CA (US)

(73) Assignee: **C & A Marketing, Inc.**, Edison, NJ (US)

(**) Term: **15 Years**

(21) Appl. No.: **29/615,726**

(22) Filed: **Aug. 30, 2017**

(51) **LOC (11) Cl.** **16-01**

(52) **U.S. Cl.**
USPC **D16/202**

(58) **Field of Classification Search**
USPC D16/200, 202–206, 208, 218, 219; 348/373–376; 396/535, 539–541
CPC G03B 15/03; G03B 17/02; G03B 17/04; G03B 17/56; G03B 19/04; H04N 5/2251; H04N 5/2252; H04N 5/2253; H04N 5/2254; H04N 2101/00
See application file for complete search history.

(56) **References Cited**

U.S. PATENT DOCUMENTS

7,646,426	B2	1/2010	Saiki et al.	
D631,496	S *	1/2011	Tainaka	D16/202
D649,997	S *	12/2011	Lnnai	D16/202
D657,408	S *	4/2012	Tainaka	D16/202

(Continued)

FOREIGN PATENT DOCUMENTS

TW D121676 3/2018

OTHER PUBLICATIONS

U.S. Appl. No. 29/561,526, filed Apr. 17, 2016, Lagerstedt.
U.S. Appl. No. 29/589,829, filed Jan. 4, 2017, Piekarski et al.

Primary Examiner — Philip S Hyder
Assistant Examiner — Ramzi S Almatrahi
(74) *Attorney, Agent, or Firm* — Weiss & Arons LLP; Avi Goldenberg, Esq.

(57) **CLAIM**

We claim the ornamental design for a camera, as shown and described.

DESCRIPTION

FIG. **1** is a top, front, right side isometric view of a camera showing a first embodiment of our new design;
FIG. **2** is a front elevational view thereof;
FIG. **3** is a rear elevational view thereof;
FIG. **4** is a right side elevational view thereof;
FIG. **5** is a left side elevational view thereof;
FIG. **6** is a top plan view thereof;
FIG. **7** is a bottom plan view thereof;
FIG. **8** is a top, rear, right side isometric view thereof;
FIG. **9** is a front, top, left side isometric view thereof;
FIG. **10** is a bottom, rear, left side isometric view thereof;
FIG. **11** is a top, front, right side isometric view of a camera showing a second embodiment of our new design;
FIG. **12** is a front elevational view thereof;
FIG. **13** is a rear elevational view thereof;
FIG. **14** is a right side elevational view thereof;
FIG. **15** is a left side elevational view thereof;
FIG. **16** is a top plan view thereof;
FIG. **17** is a bottom plan view thereof;
FIG. **18** is a top, rear, right side isometric view thereof;
FIG. **19** is a front, top, left side isometric view thereof; and,
FIG. **20** is a bottom, rear, left side isometric view thereof.
The subject matter shown in broken line depicts portions of the camera in which the design is embodied that form no part of the claimed design.

1 Claim, 14 Drawing Sheets

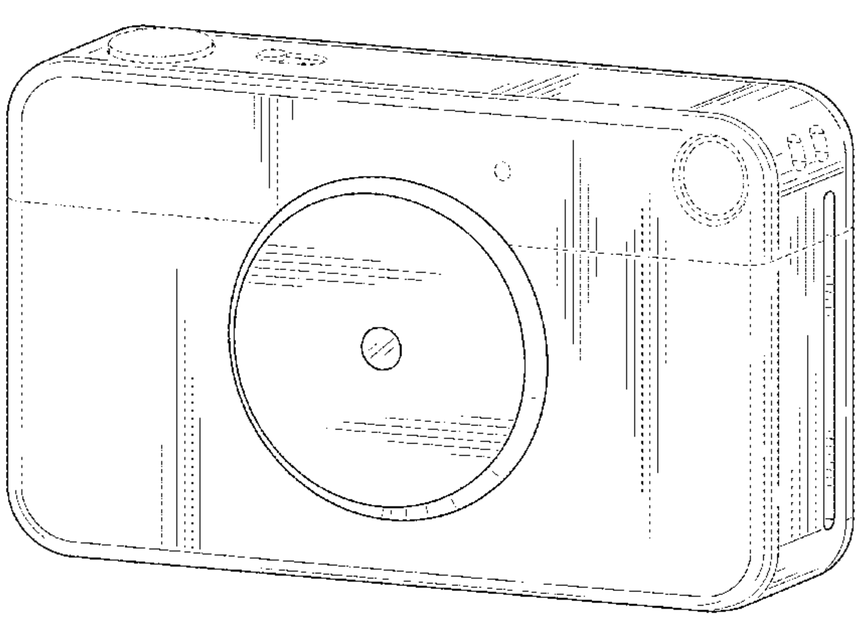

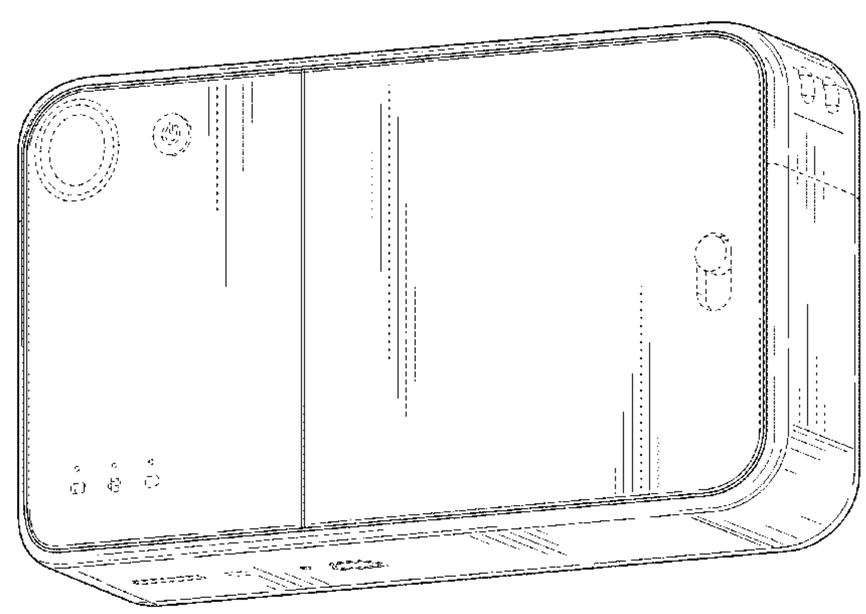

(56) **References Cited**

U.S. PATENT DOCUMENTS

D668,281	S		10/2012	Nakamura	
D681,710	S	*	5/2013	Sato	D16/200
D683,781	S		6/2013	Imai	
D684,204	S		6/2013	Uemachi	
D689,535	S		9/2013	Nojima	
D695,329	S		12/2013	Fujita et al.	
D695,805	S		12/2013	Sakai	
D695,807	S	*	12/2013	Tainaka	D16/202
D695,808	S		12/2013	Takahashi	
D697,960	S	*	1/2014	Sato	D16/200
D698,839	S	*	2/2014	Sato	D16/200
D701,257	S	*	3/2014	Ogawa	D16/202
D702,748	S		4/2014	Muraki et al.	
D707,742	S		6/2014	Imamizu	
D716,862	S	*	11/2014	Hoshi	D16/202
D717,353	S		11/2014	Kobayashi et al.	
D721,118	S		1/2015	Chai	
D749,659	S	*	2/2016	Kamei	D16/202
D796,565	S		9/2017	Lagerstedt	
2002/0041765	A1		4/2002	Onda et al.	
2011/0109790	A1	*	5/2011	Shinohara	G03B 17/14 348/373
2011/0181771	A1		7/2011	Hazama	
2011/0216237	A1	*	9/2011	Shinohara	G03B 17/02 348/373
2011/0298970	A1	*	12/2011	Shinohara	G03B 17/14 348/373

* cited by examiner

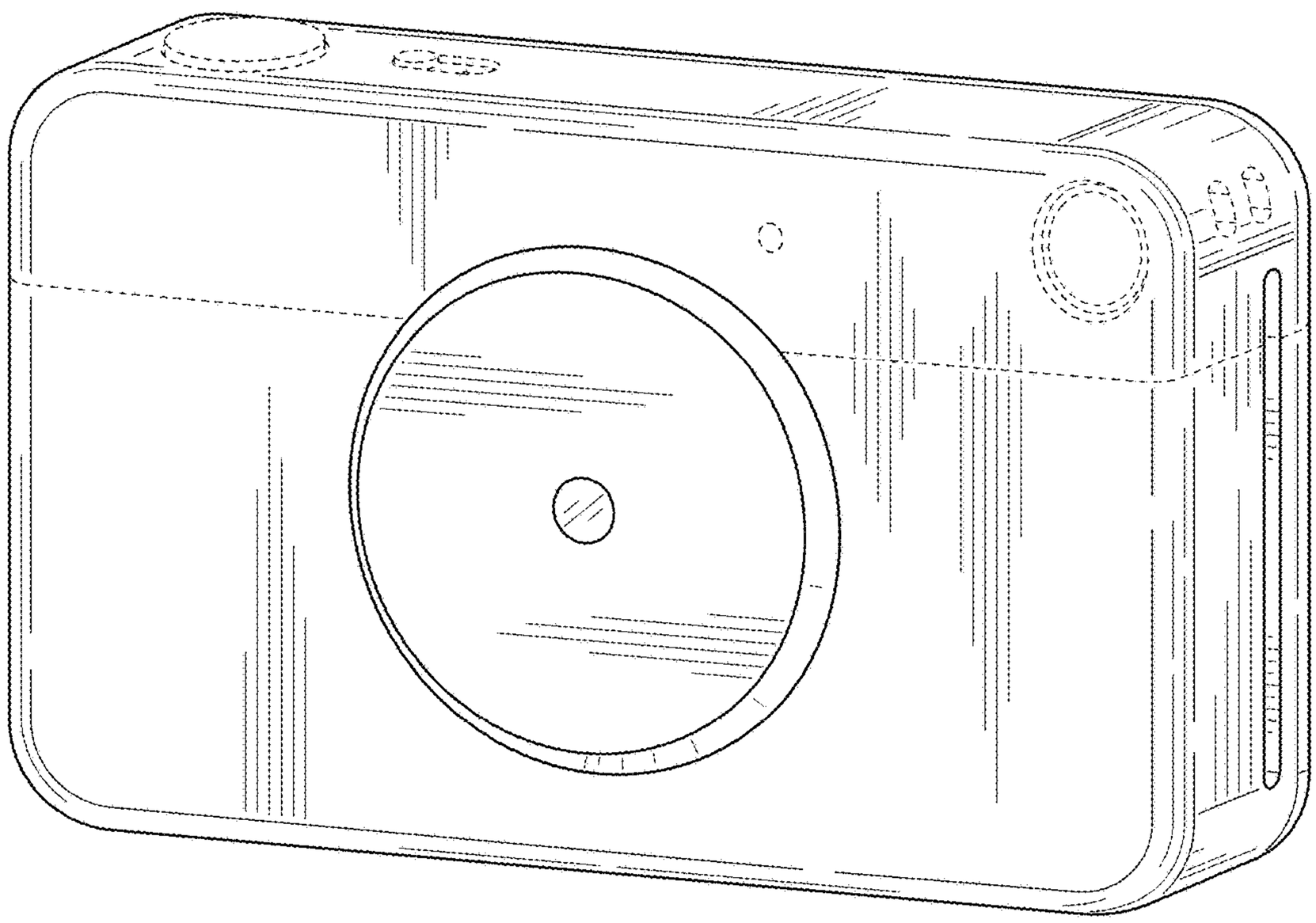

FIG. 1

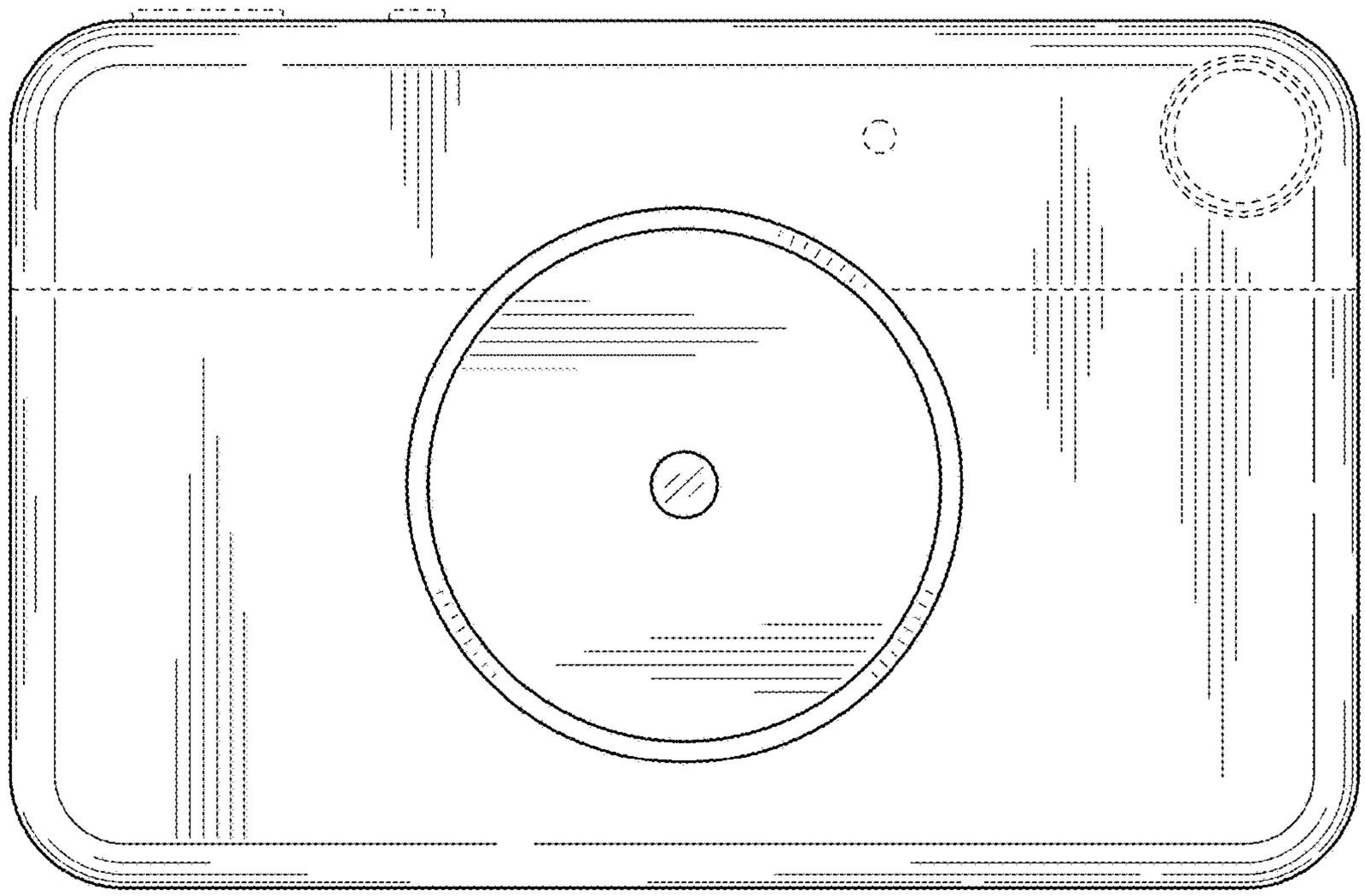

FIG. 2

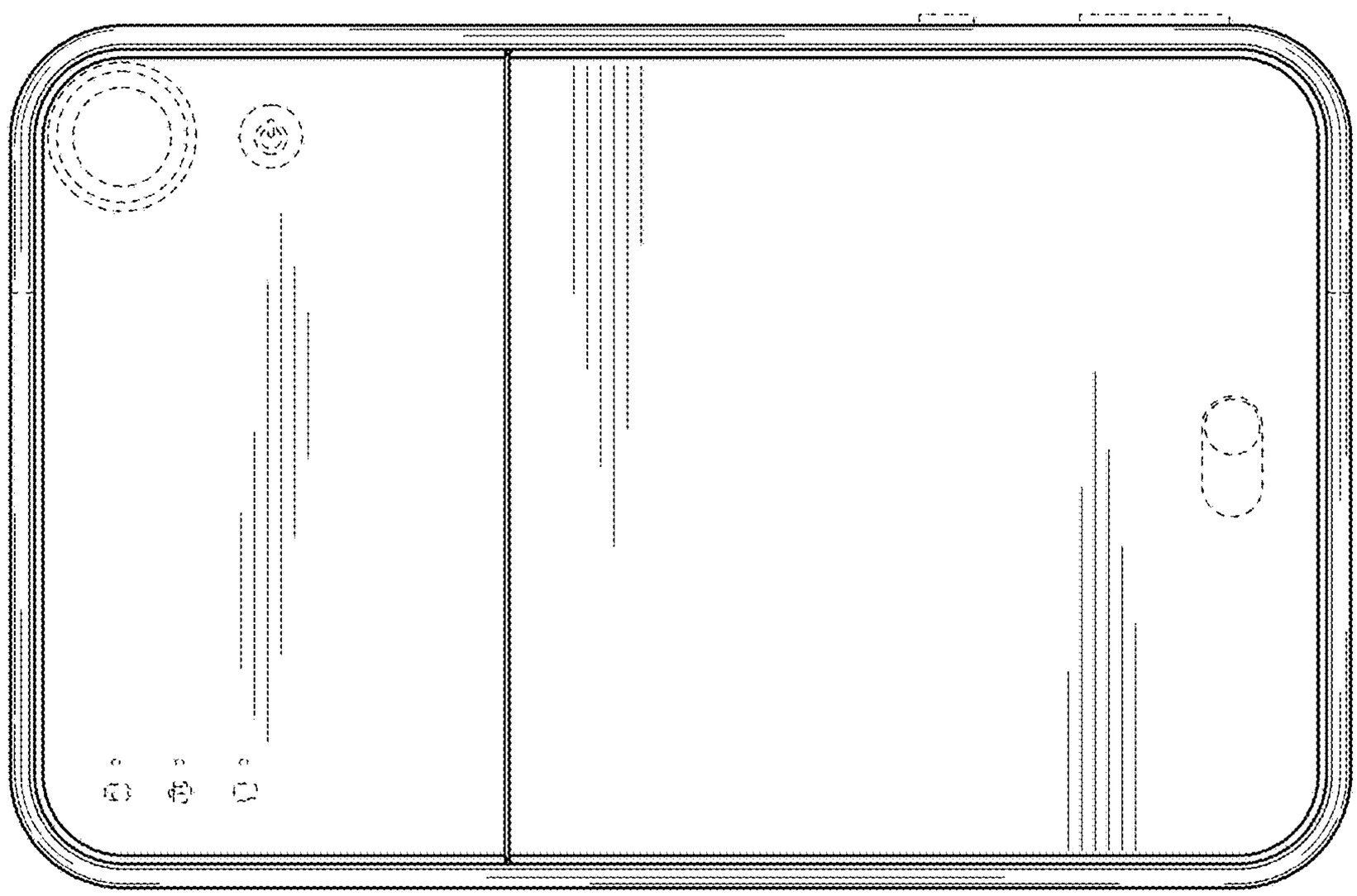

FIG. 3

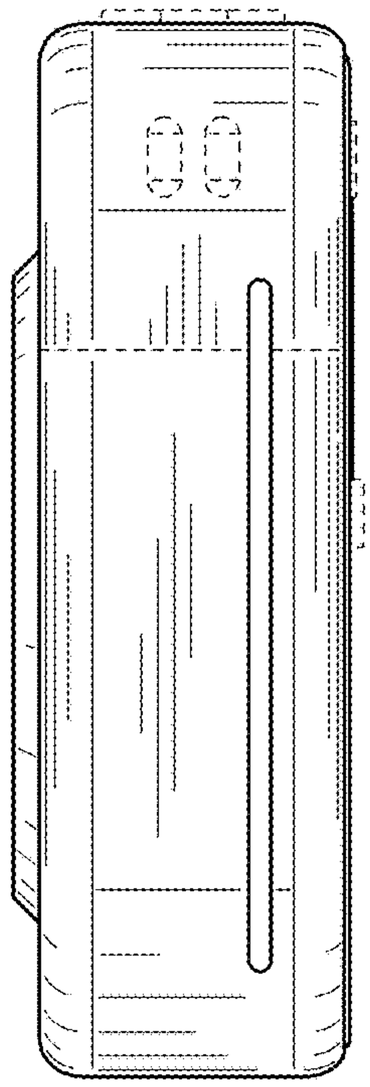

FIG. 4

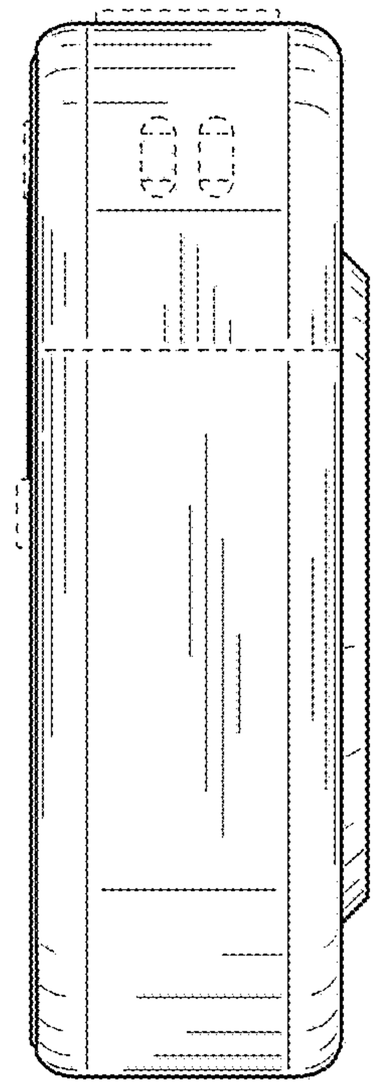

FIG. 5

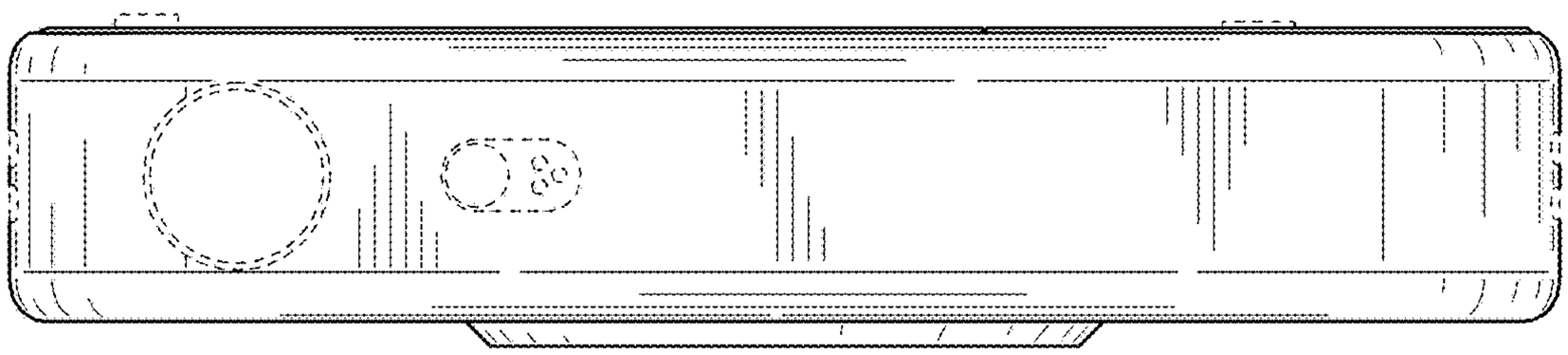

FIG. 6

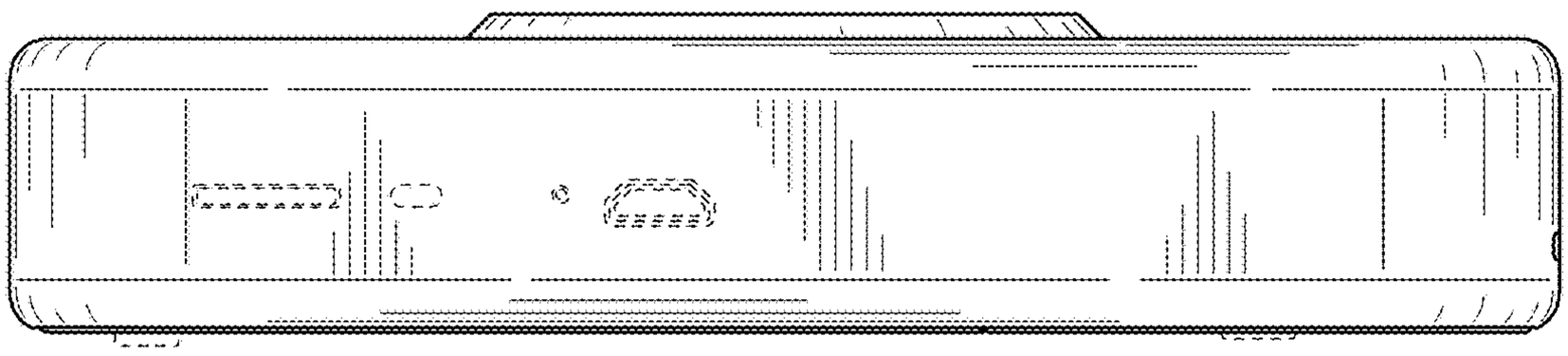

FIG. 7

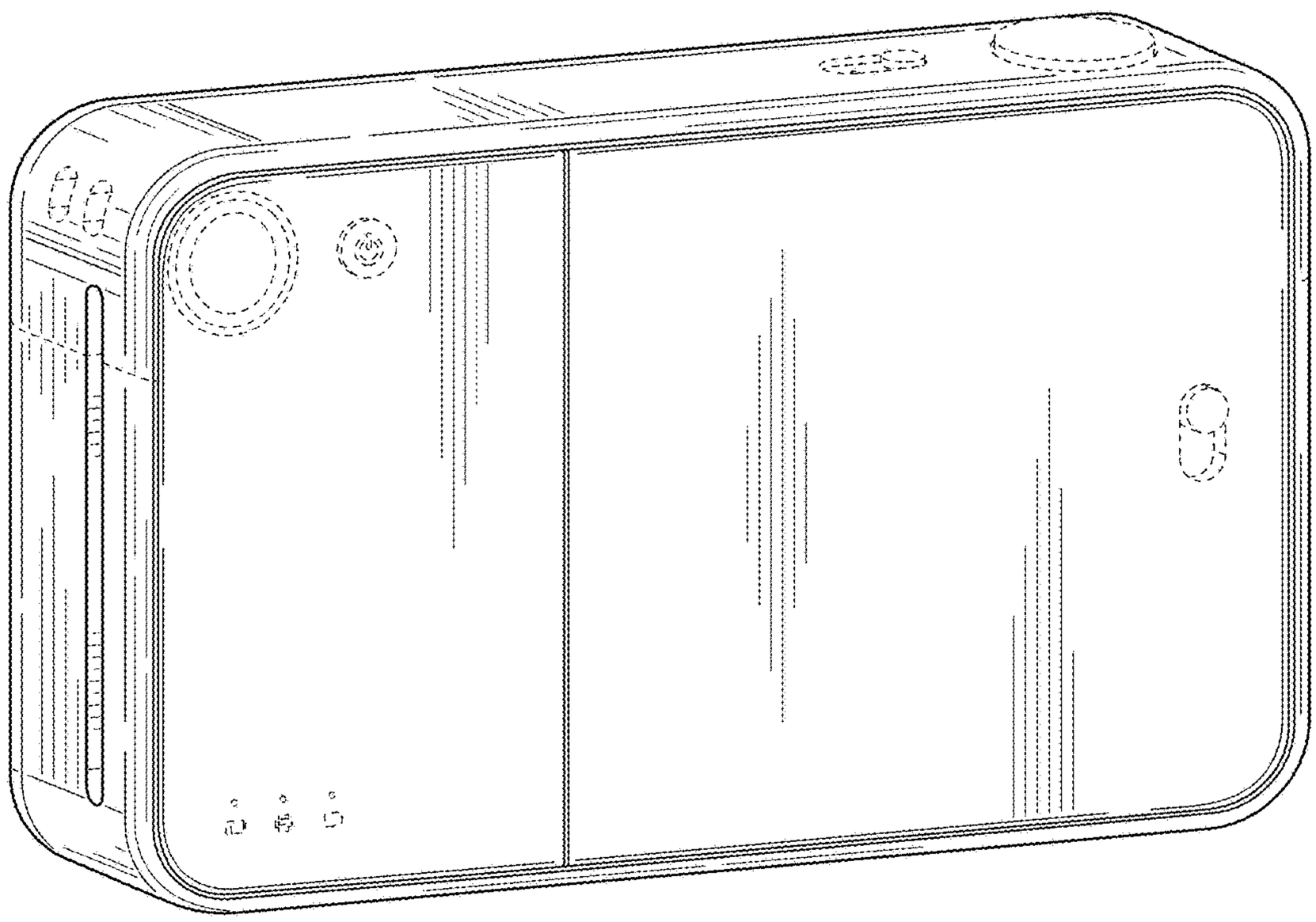

FIG. 8

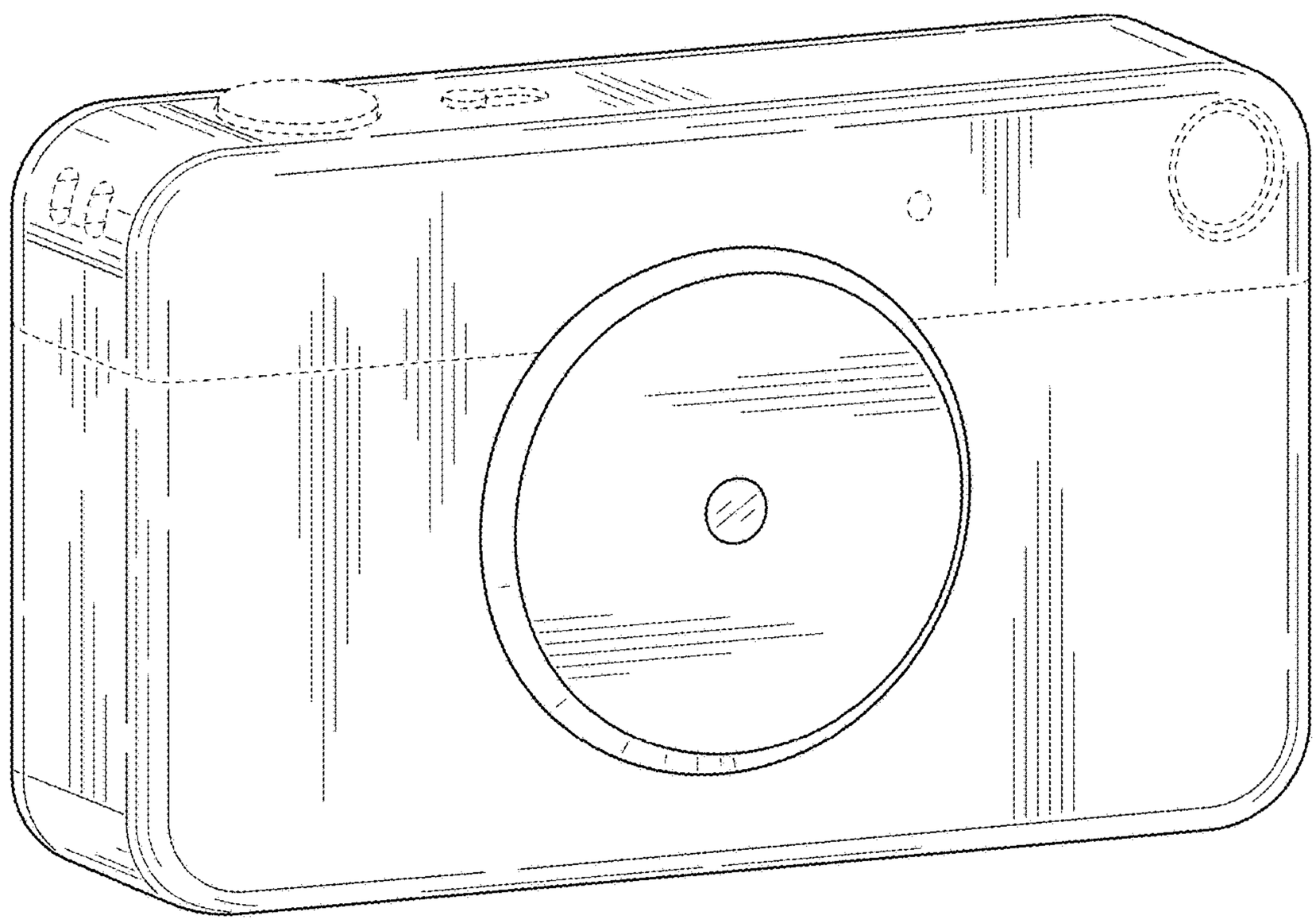

FIG. 9

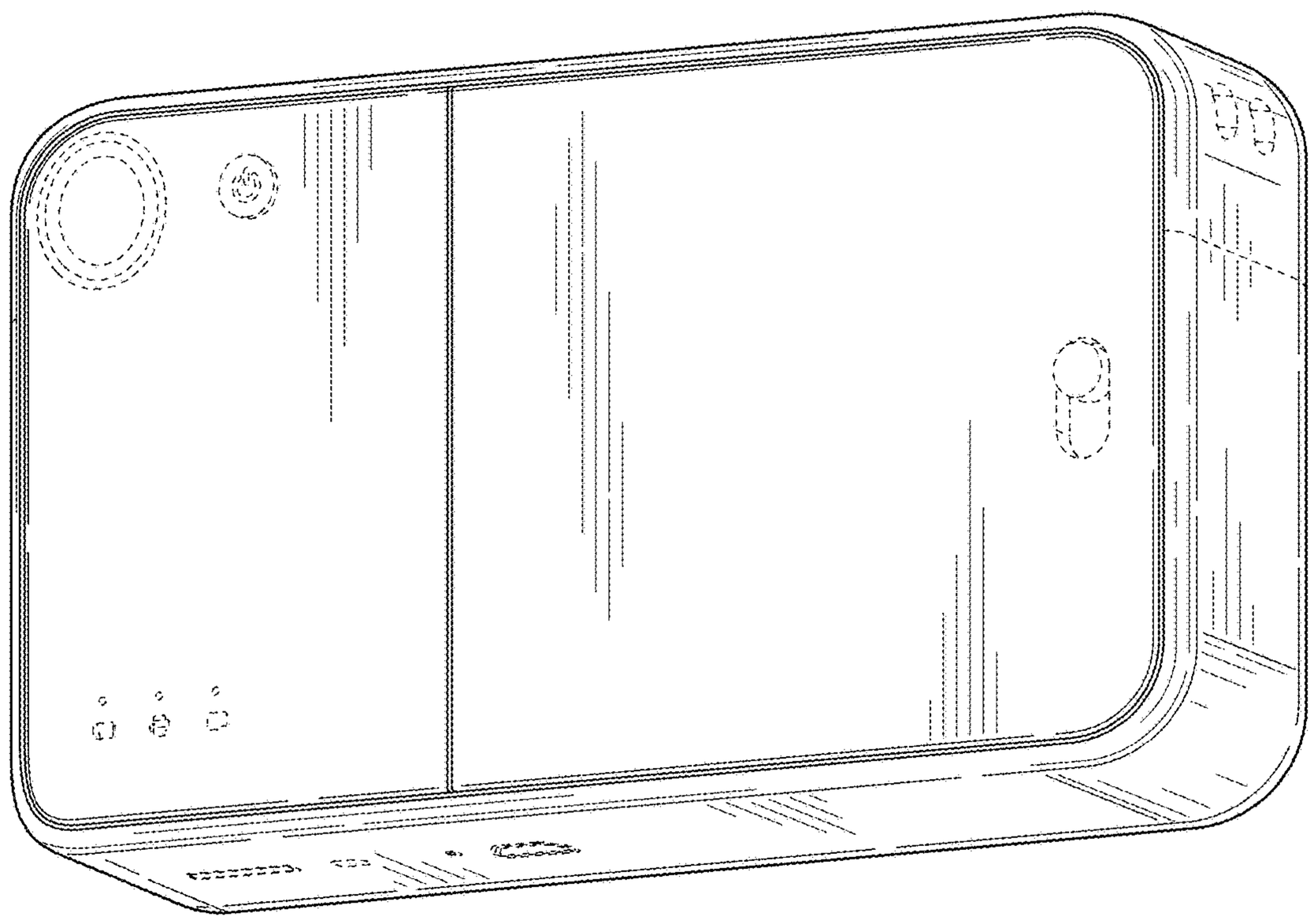

FIG. 10

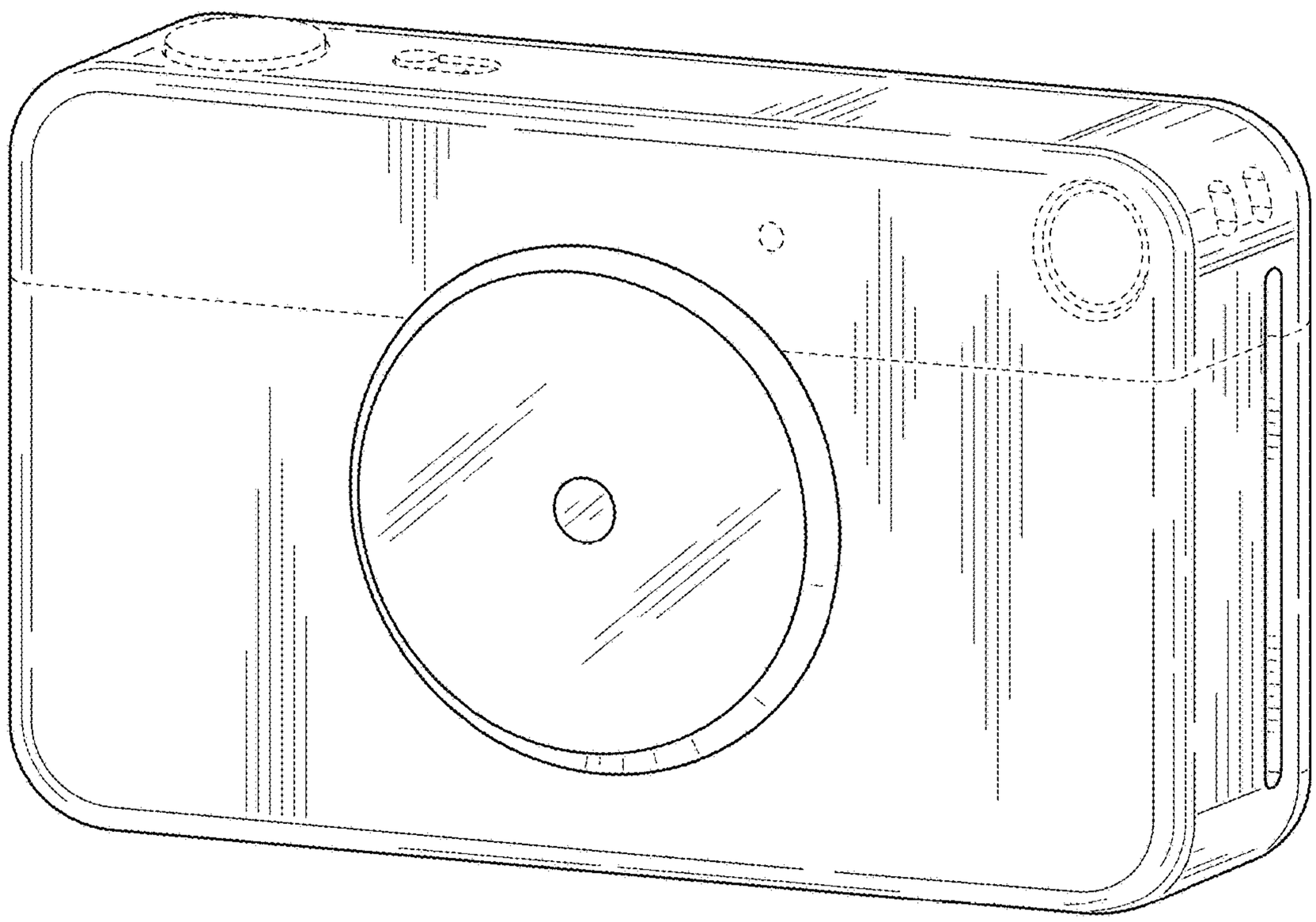

FIG. 11

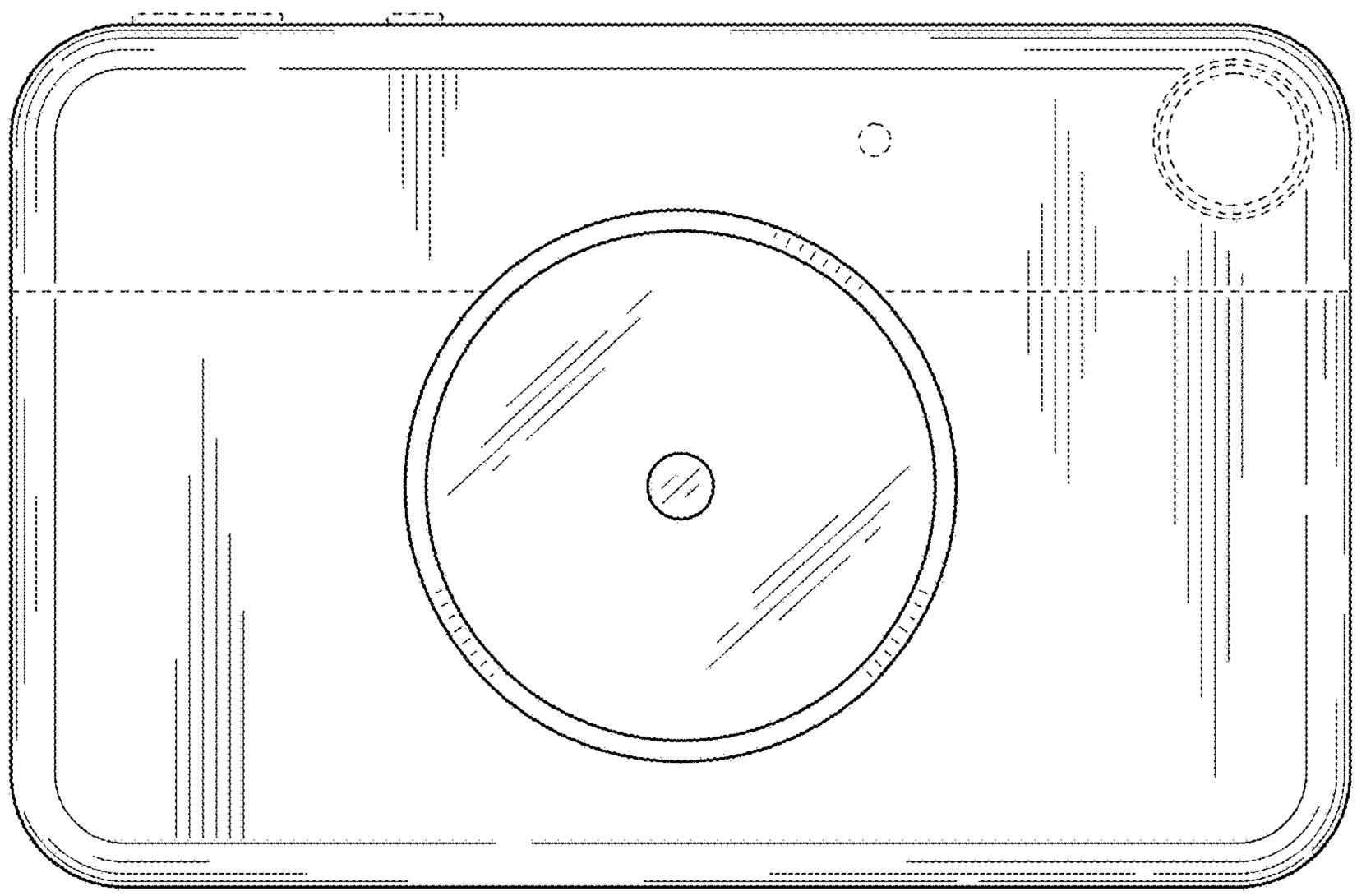

FIG. 12

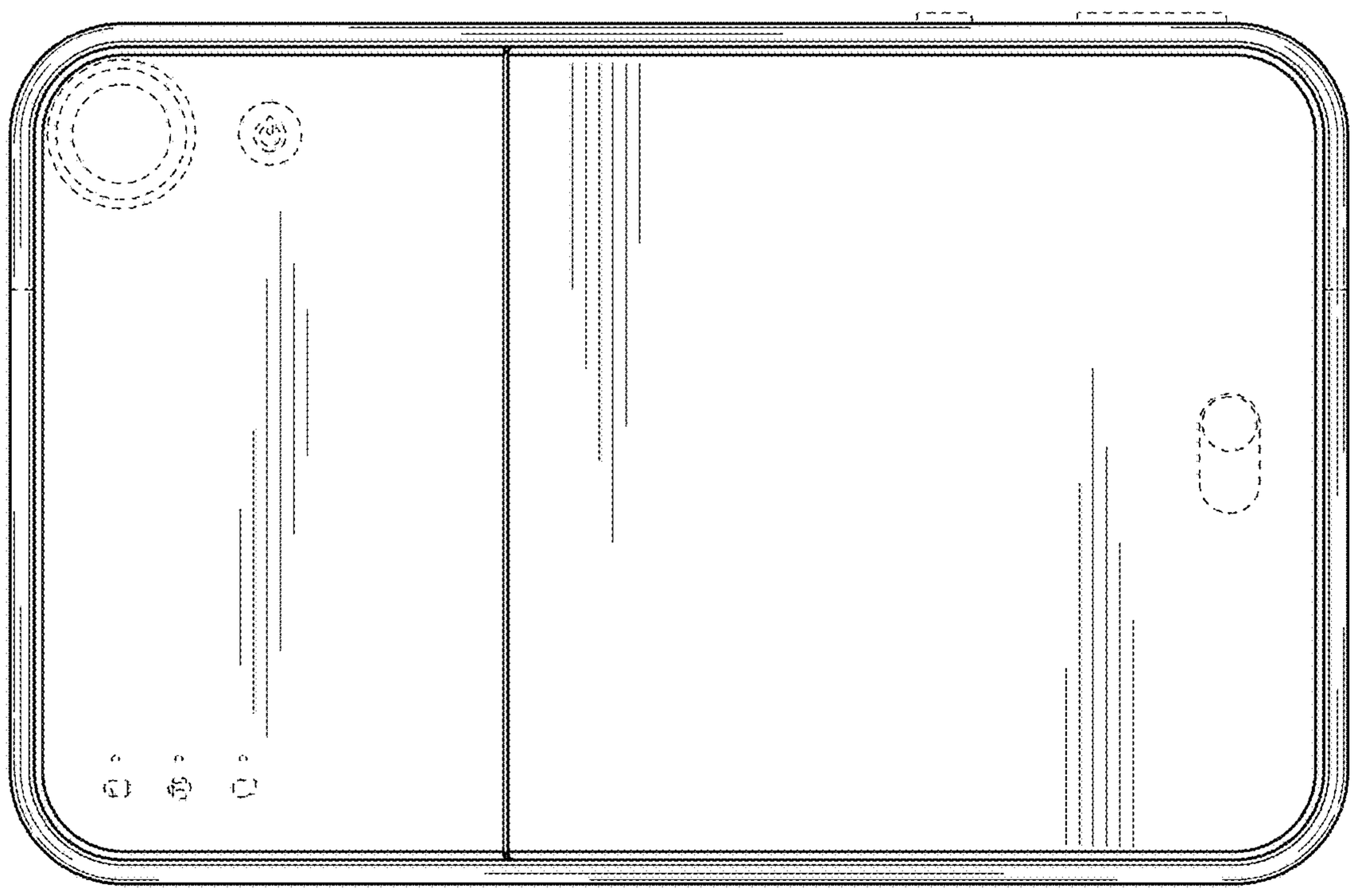

FIG. 13

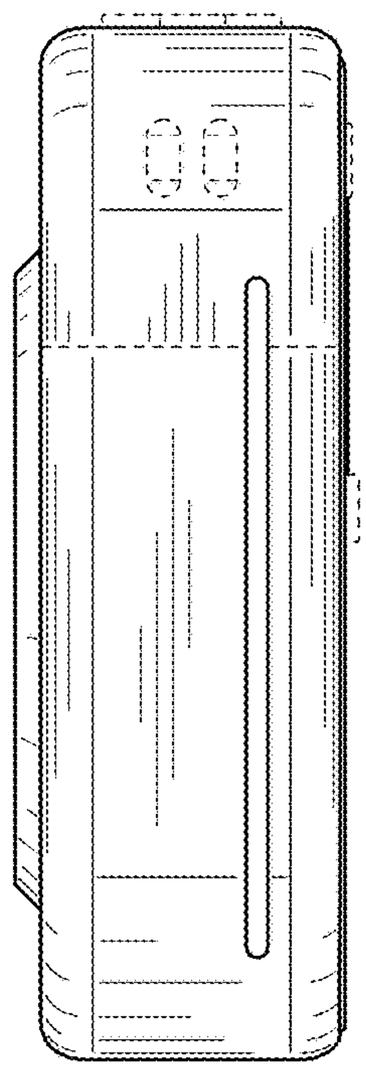

FIG. 14

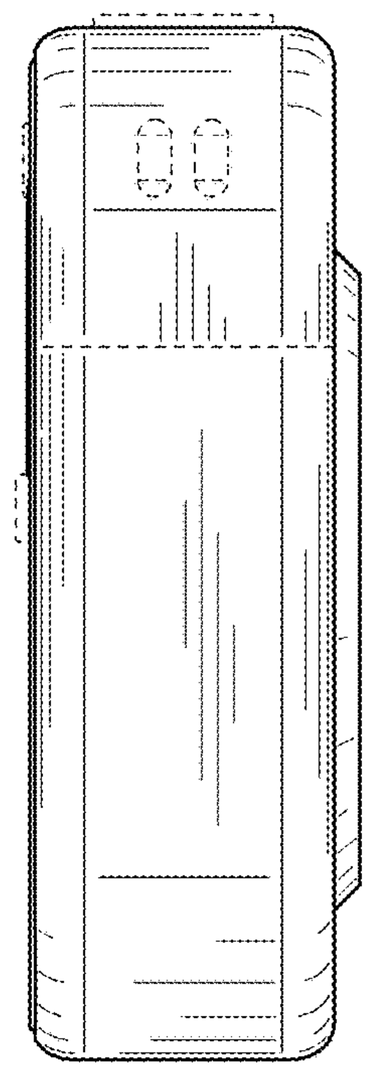

FIG. 15

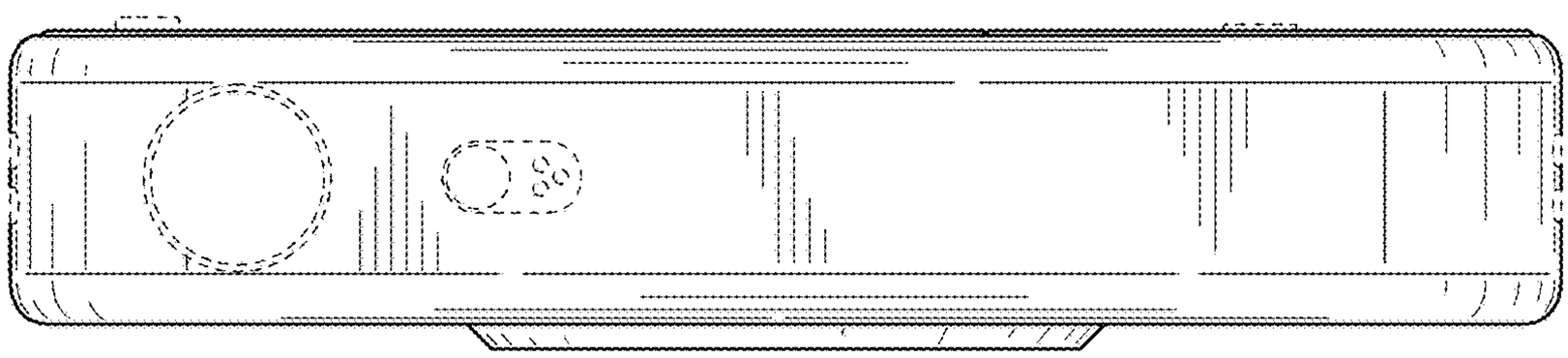

FIG. 16

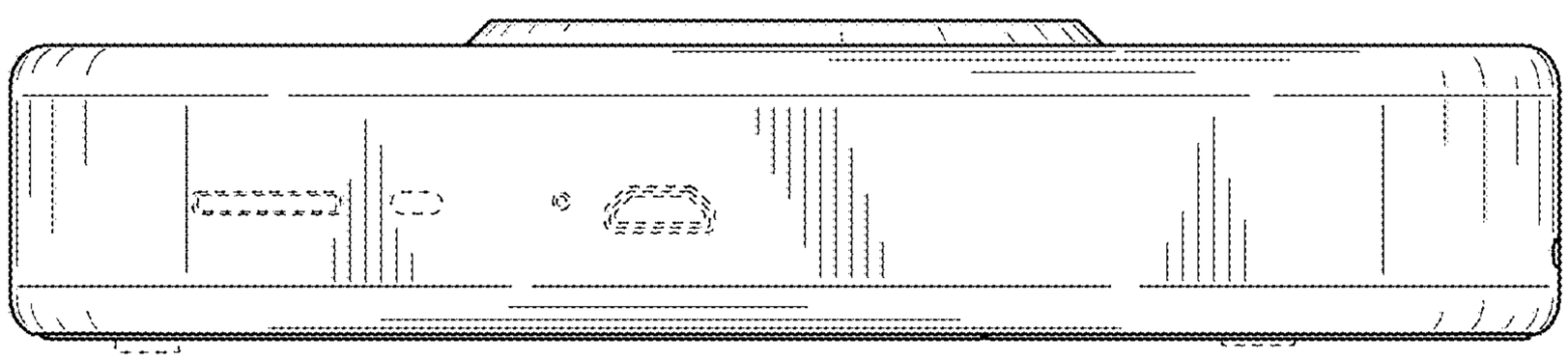

FIG. 17

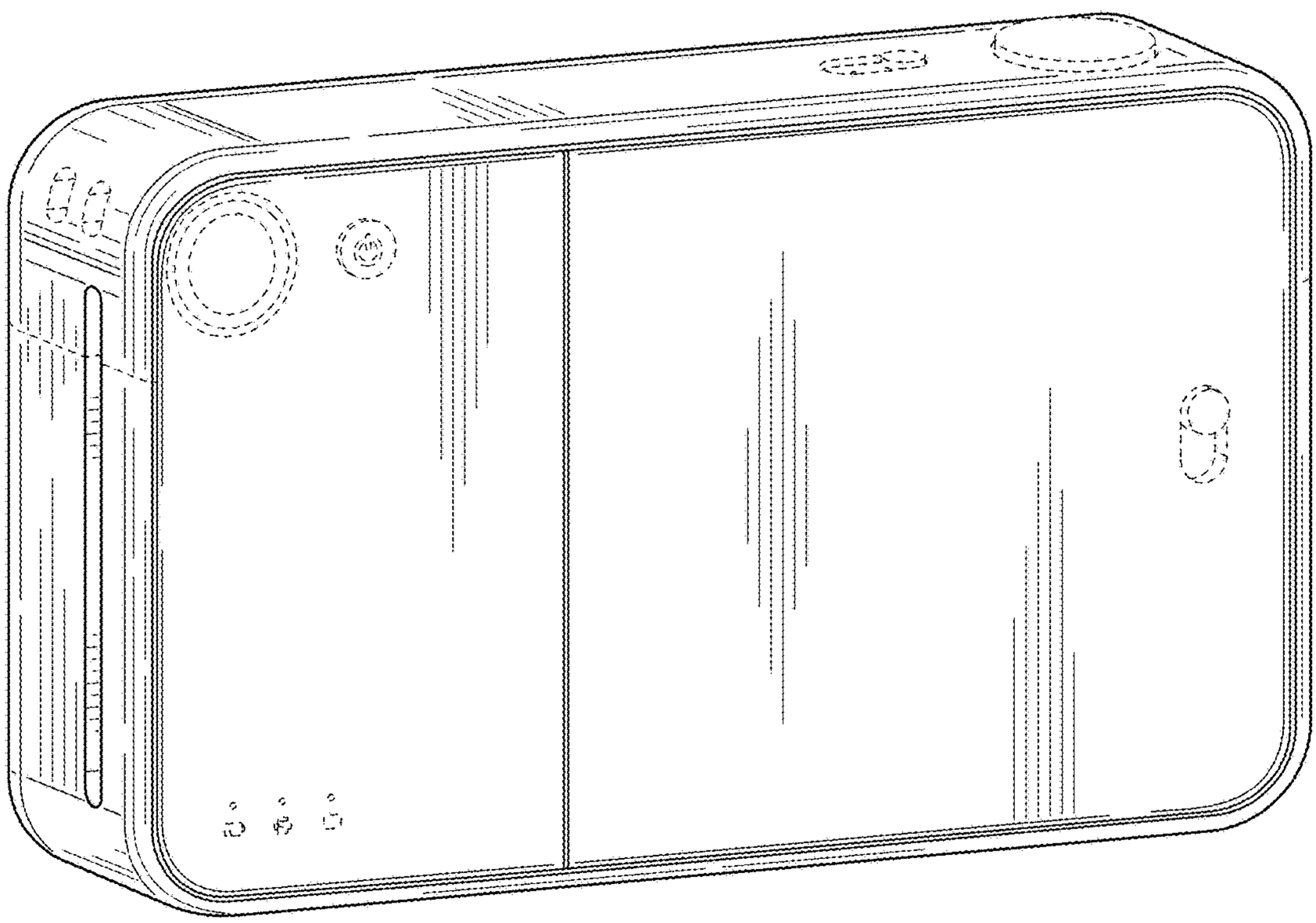

FIG. 18

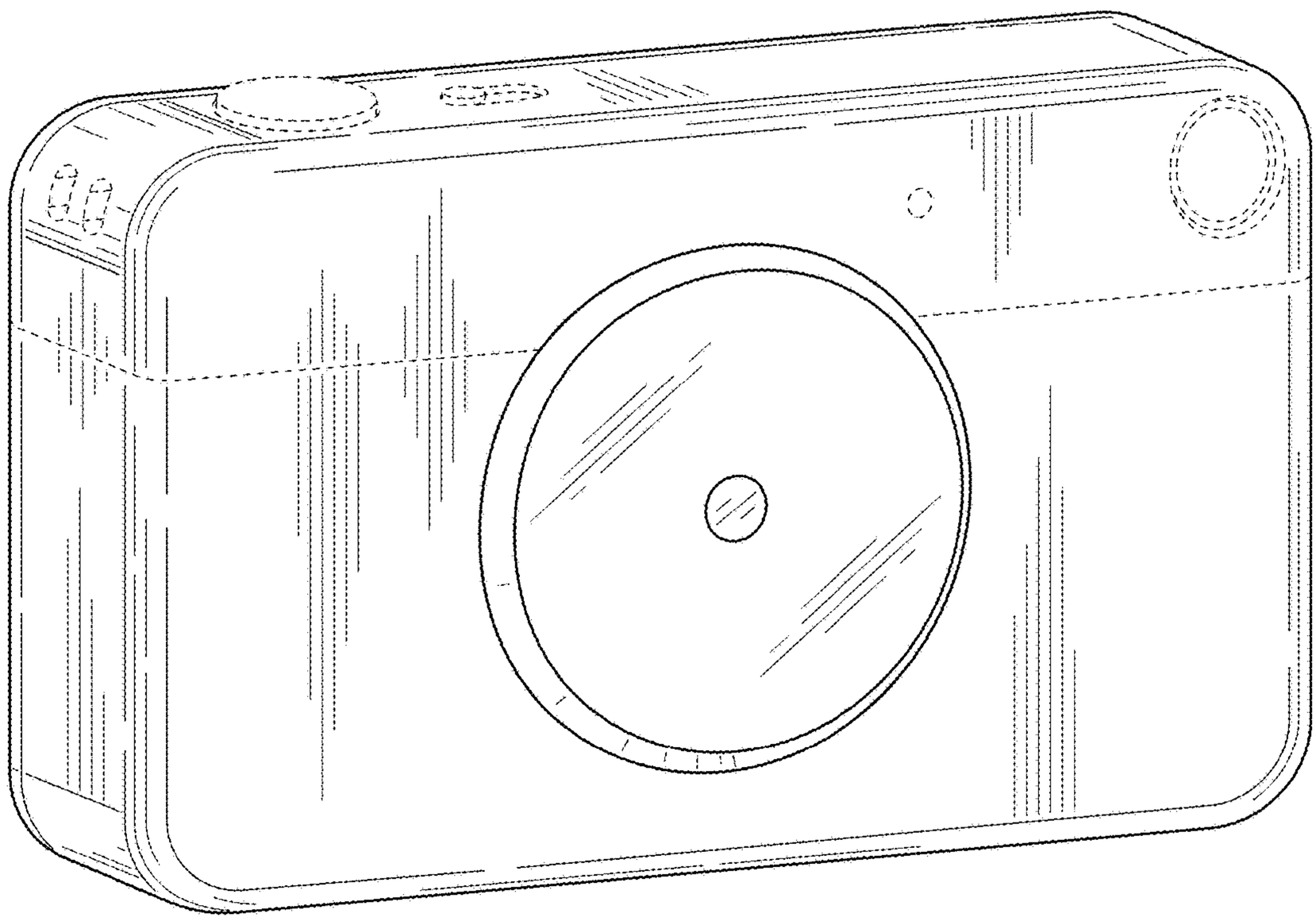

FIG. 19

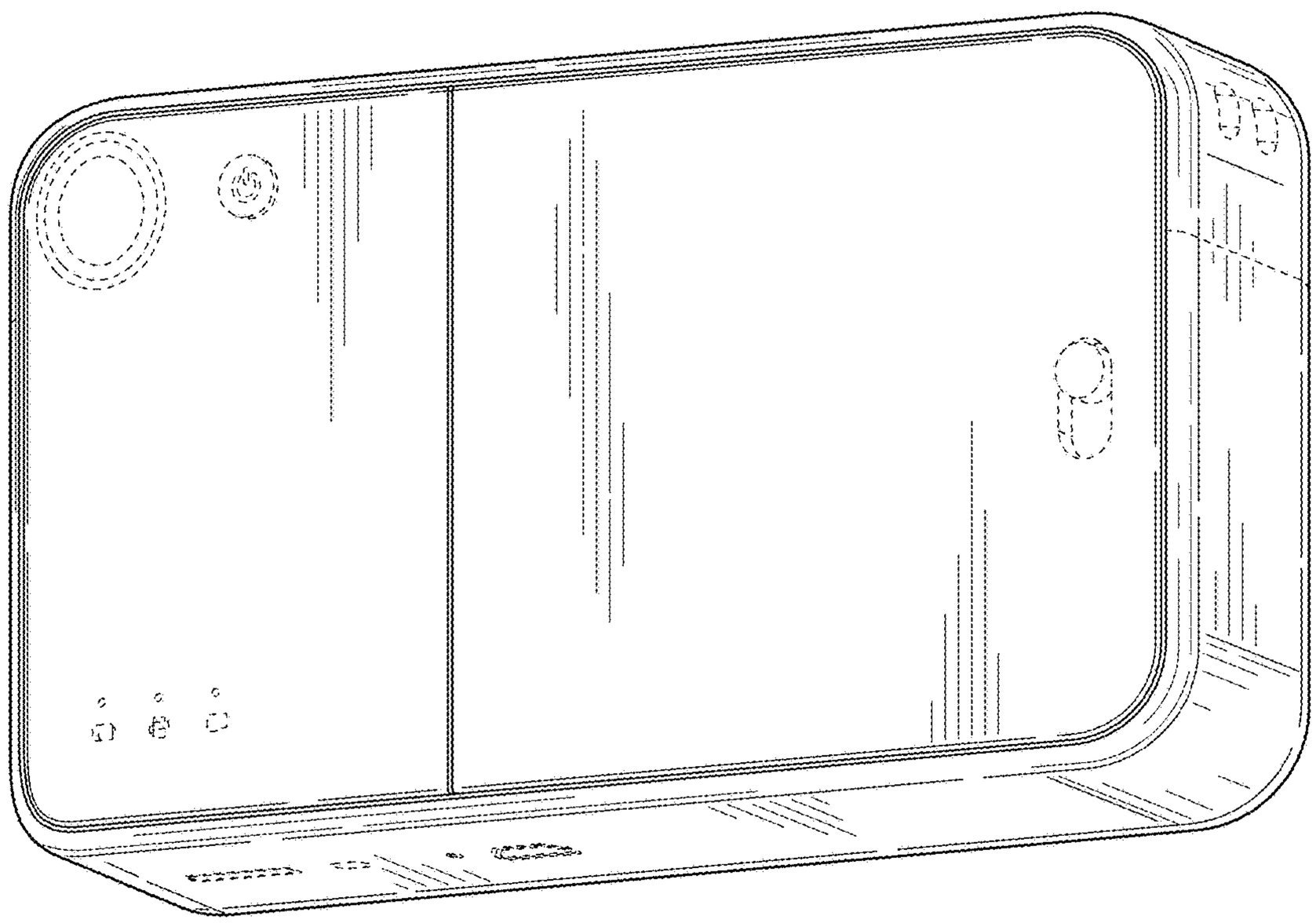

FIG. 20