US00D836383S

(12) United States Design Patent
Dutruel

(10) Patent No.: US D836,383 S
(45) Date of Patent: ** Dec. 25, 2018

(54) **ELECTRIC FRYER**

(71) Applicant: **SEB**, Selongey (FR)

(72) Inventor: **Laurent Dutruel**, Dole (FR)

(73) Assignee: **SEB**, Selongey (FR)

(**) Term: **15 Years**

(21) Appl. No.: **29/621,372**

(22) Filed: **Oct. 6, 2017**

Related U.S. Application Data

(62) Division of application No. 29/546,775, filed on Nov. 25, 2015, now Pat. No. Des. 819,389.

(30) **Foreign Application Priority Data**

May 29, 2015 (EM) 002709741-0001
May 29, 2015 (EM) 002709741-0002
May 29, 2015 (EM) 002709741-0003

(51) **LOC (11) Cl.** **07-02**

(52) **U.S. Cl.**
USPC **D7/354**

(58) **Field of Classification Search**
USPC D3/201, 202, 203.1, 270, 271.1; D7/323, D7/354–363, 391, 393–396, 402, 409, D7/560; D9/434, 435, 438, 439, 440, D9/443, 446, 447, 448, 449, 450, 452, D9/453, 454, 456, 502, 503, 504, 529
CPC . A47G 19/12; A47J 27/00; A47J 27/02; A47J 27/08; A47J 27/21; A47J 27/58; A47J 36/06; A47J 36/025; A47J 36/12; A47J 36/08; A47J 36/10; A47J 36/165; A47J 36/18; A47J 36/20; A47J 36/22; A47J 37/00; A47J 37/10; A47J 37/101; A47J 37/103; A47J 37/12; A47J 37/1204; A47J 45/061; A47J 45/071; A47J 45/0114; A23L 1/01; A23L 1/0107; A23L 1/0114; G07F 17/0064; G07F 17/0078; G07F 17/0085
See application file for complete search history.

(56) **References Cited**

U.S. PATENT DOCUMENTS

D313,530	S	*	1/1991	Leiros	D7/354
D366,592	S		1/1996	Cesaroni et al.	
D369,270	S	*	4/1996	Payen	D7/323
D369,505	S	*	5/1996	Philippe	D7/323
D376,067	S		12/1996	Littmann	
D386,646	S	*	11/1997	Wurth	D7/354
D395,786	S	*	7/1998	Rossi	D7/323
D414,072	S	*	9/1999	Powell	D7/354

(Continued)

FOREIGN PATENT DOCUMENTS

EP	1428463	A1	*	6/2004	A47J 37/1209
EP	1428464	A1	*	6/2004	A47J 37/1209
FR	2848290	A1	*	6/2004	C23C 26/00

Primary Examiner — Jennifer Rivard
Assistant Examiner — Catherine S Posthauer
(74) *Attorney, Agent, or Firm* — Loeb & Loeb LLP

(57) **CLAIM**

The ornamental design for an electric fryer, as shown and described.

DESCRIPTION

FIG. **1** is a perspective view of an electric fryer showing my new design;
FIG. **2** is a front elevational view thereof;
FIG. **3** is a back elevational view thereof;
FIG. **4** is a right side elevational view thereof;
FIG. **5** is a left side elevational view thereof;
FIG. **6** is a top view of the electric fryer thereof; and,
FIG. **7** is a bottom view of the electric fryer thereof.
The broken lines are shown for the purpose of illustrating parts of the electric fryer that form no part of the claimed design.

1 Claim, 7 Drawing Sheets

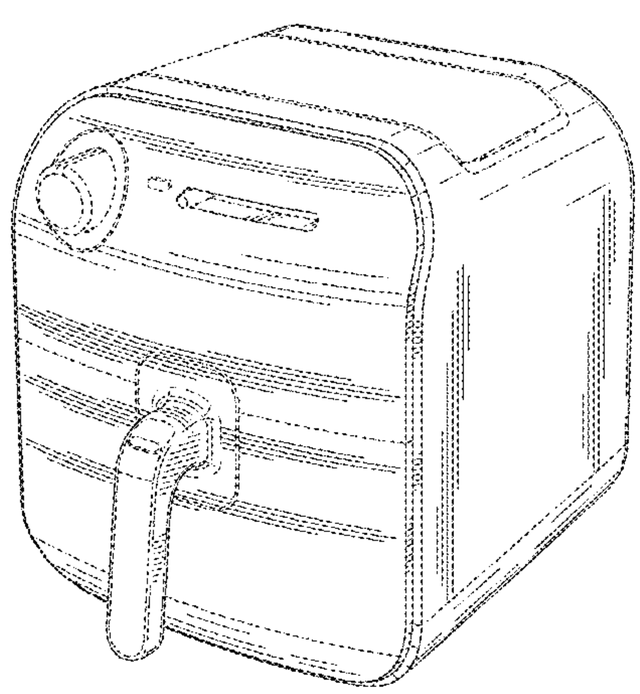

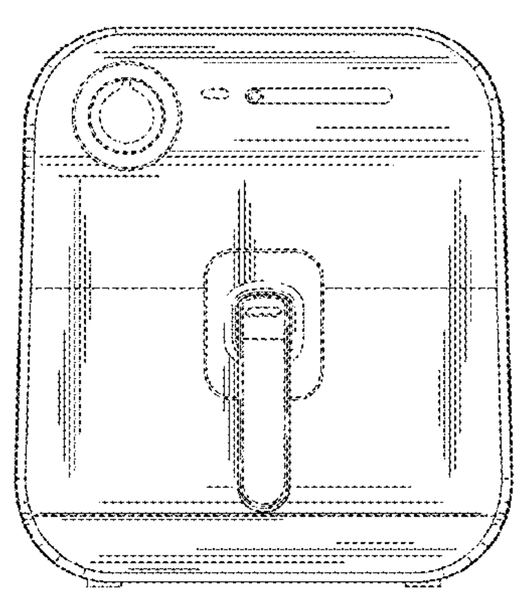

(56) **References Cited**

U.S. PATENT DOCUMENTS

D422,447	S	*	4/2000	Josancy	D7/354
D423,277	S	*	4/2000	Josancy	D7/354
D433,869	S		11/2000	Wong et al.	
6,234,067	B1		5/2001	Schmidt	
D448,238	S	*	9/2001	Schmidt	A47J 36/12 D7/360
D451,335	S		12/2001	Rossman	
D463,711	S	*	10/2002	Josancy	D7/354
D464,526	S	*	10/2002	Brown	D7/354
D474,937	S		5/2003	Josancy	
D475,570	S	*	6/2003	Josancy	D7/354
D489,935	S	*	5/2004	Choi	D7/354
D502,845	S		3/2005	Wilgus et al.	
D539,599	S		4/2007	De'Longhi	
D542,592	S		5/2007	Lubowicki	
D548,002	S		8/2007	De'Longhi	
D557,552	S	*	12/2007	Matras	D7/354
D575,579	S		8/2008	Ball	
D583,616	S	*	12/2008	Jerstroem	D7/354
D588,860	S	*	3/2009	Tienor	D7/354
D589,293	S		3/2009	Averty	
D592,008	S	*	5/2009	Reiner	D7/354
D604,093	S	*	11/2009	Moussu	D7/360
D611,757	S	*	3/2010	Reiner	D7/354
D620,744	S	*	8/2010	Rose	D7/354
D635,816	S		4/2011	Tse	
D645,296	S		9/2011	Saboe et al.	
D646,114	S		10/2011	Wong	
D647,752	S		11/2011	Curtis et al.	
D672,600	S	*	12/2012	Berge	D7/354
D674,651	S	*	1/2013	Berge	D7/354
D676,271	S	*	2/2013	Reiner	D7/354
D677,112	S	*	3/2013	Piret	D7/354
D677,113	S	*	3/2013	Reiner	D7/354
D677,527	S	*	3/2013	Brega	D7/402
D680,800	S	*	4/2013	Berge	D7/354
D680,801	S		4/2013	Seymour	
D680,802	S		4/2013	Seymour	
D684,807	S		6/2013	Nakatani	
D686,443	S		7/2013	Morabito	
D692,718	S		11/2013	Verbrugge	
D712,695	S		9/2014	Horimoto	
D716,600	S	*	11/2014	Dutruel	D7/354
D730,678	S		6/2015	Horimoto	
D747,133	S		1/2016	Dutruel	
D750,418	S		3/2016	Allende et al.	
D763,034	S		8/2016	Berge	
D765,460	S		9/2016	Akiyama	
D793,797	S	*	8/2017	Krooshof	D7/354
D802,986	S	*	11/2017	Krooshof	D7/354
D814,232	S	*	4/2018	Barquin	D7/354
D816,390	S	*	5/2018	Zhang	D7/354
2007/0221651	A1		9/2007	Kristina et al.	
2016/0287001	A1		10/2016	Pan et al.	

* cited by examiner

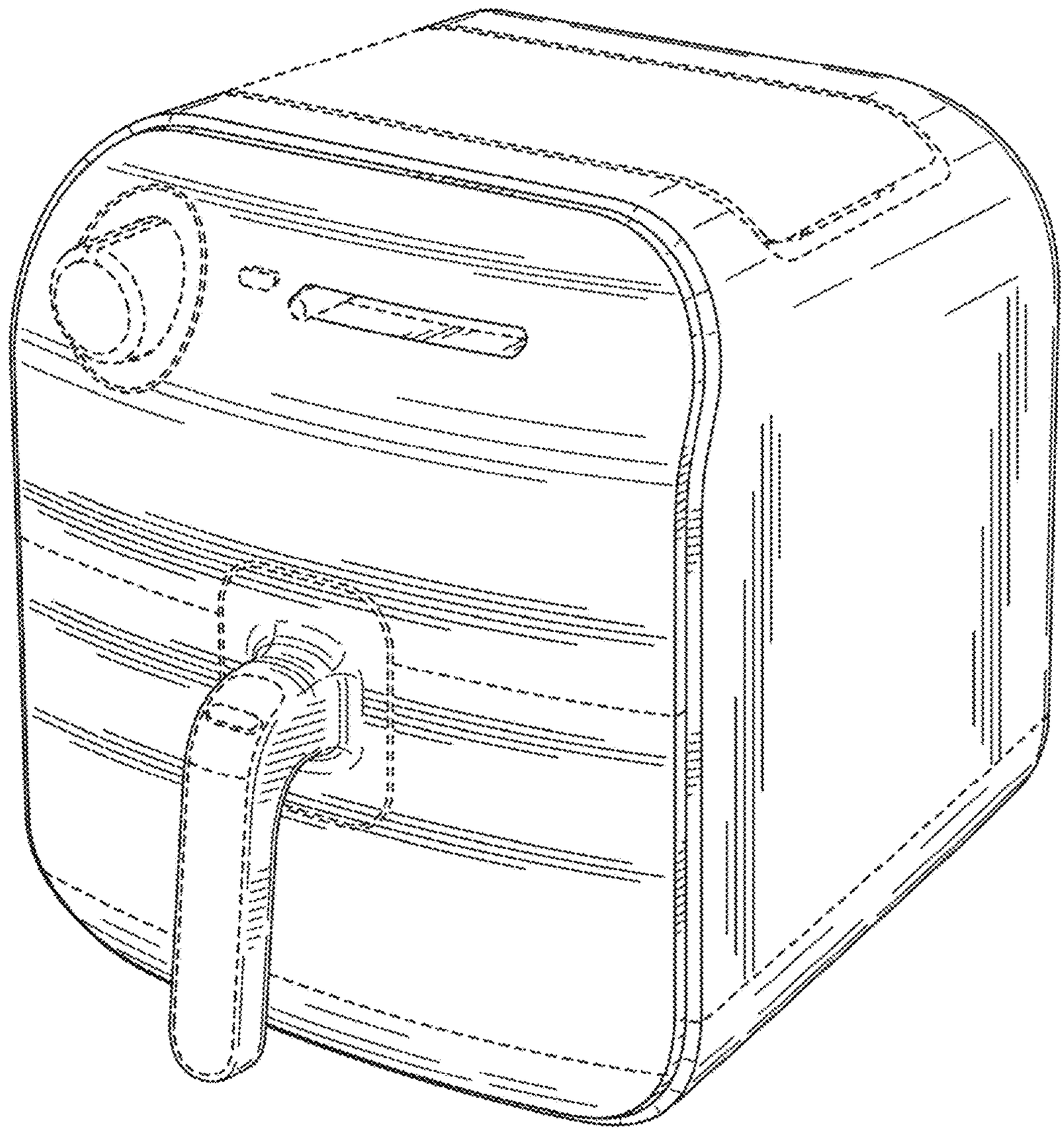

FIG. 1

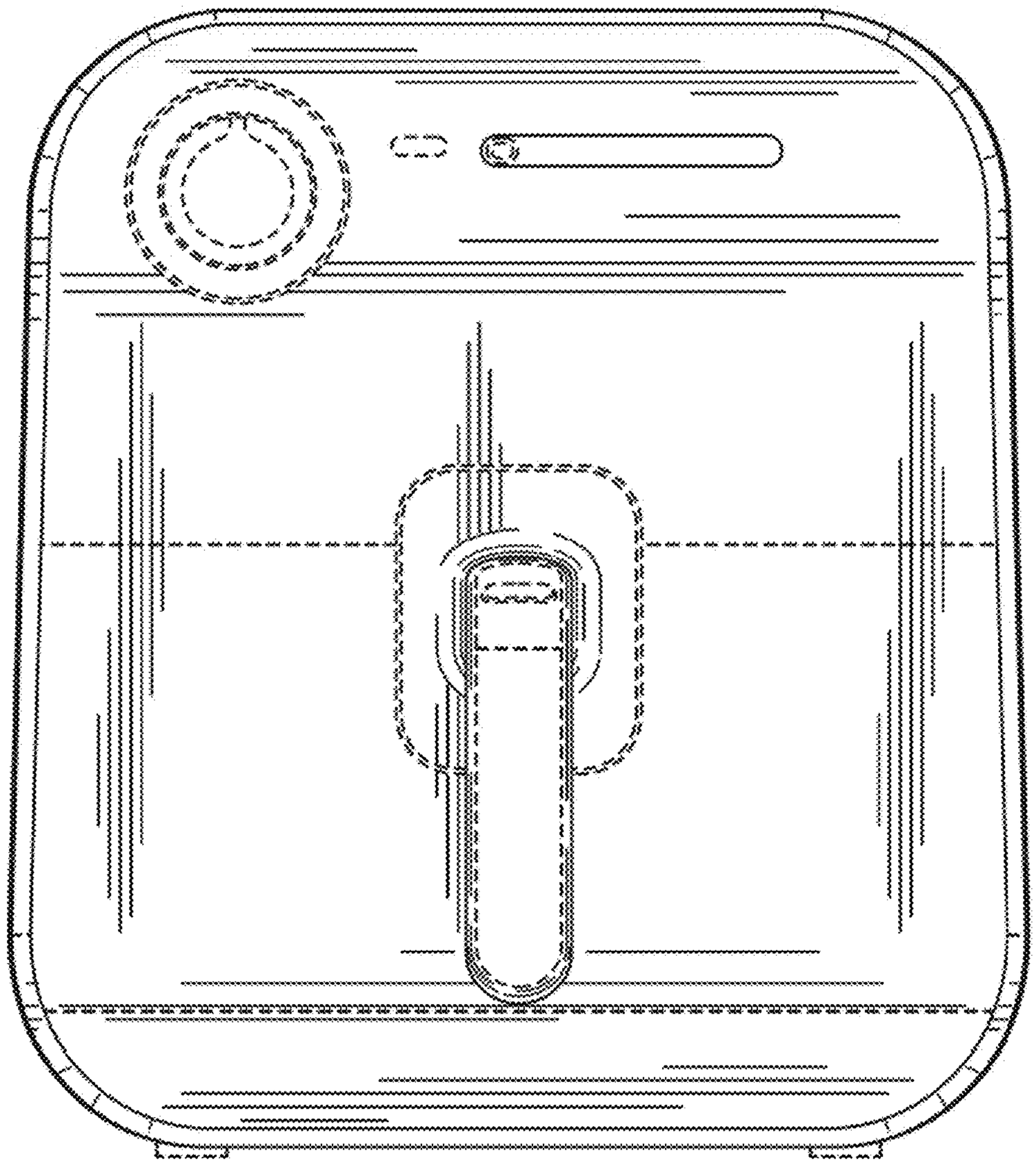

FIG. 2

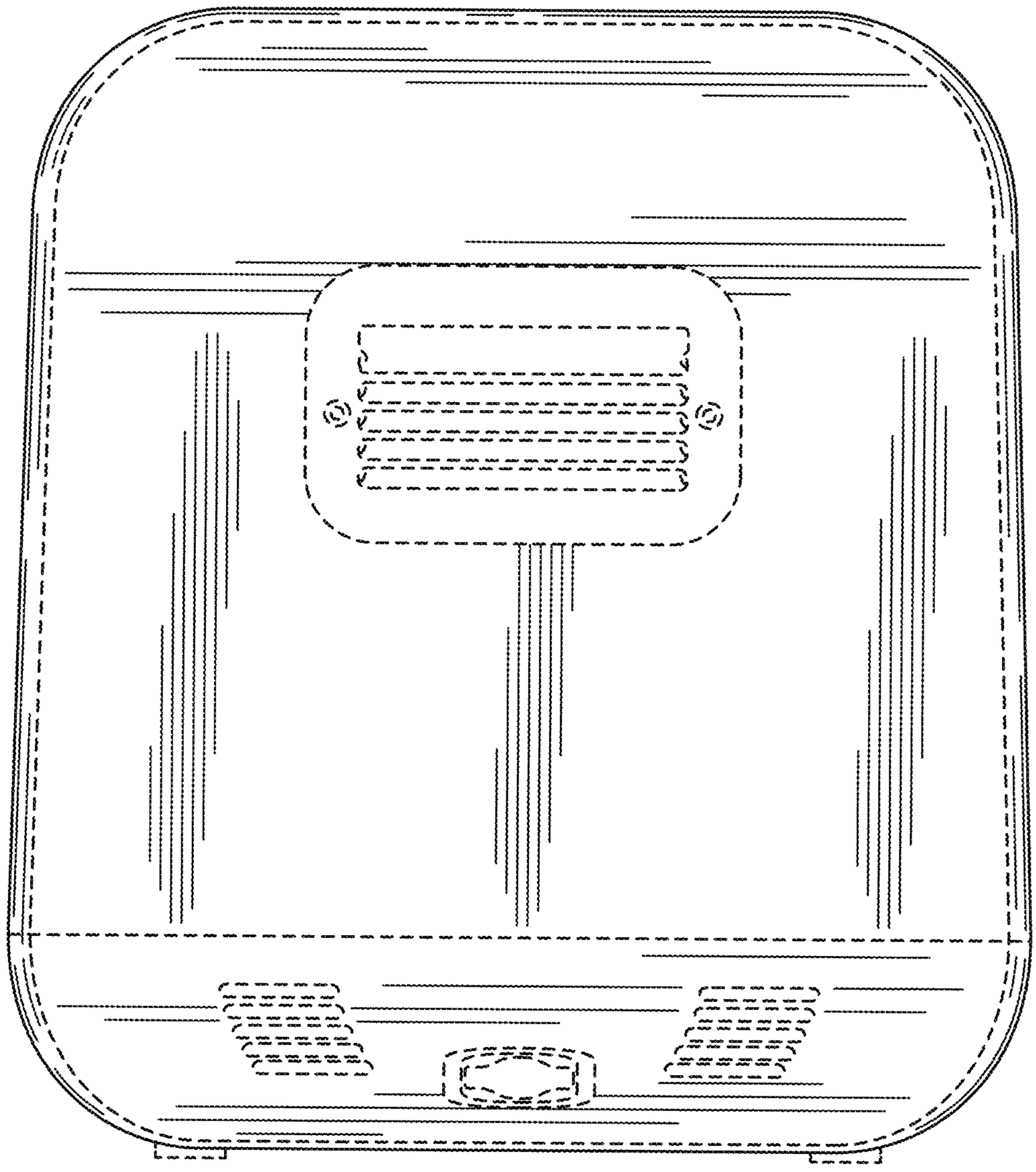

FIG. 3

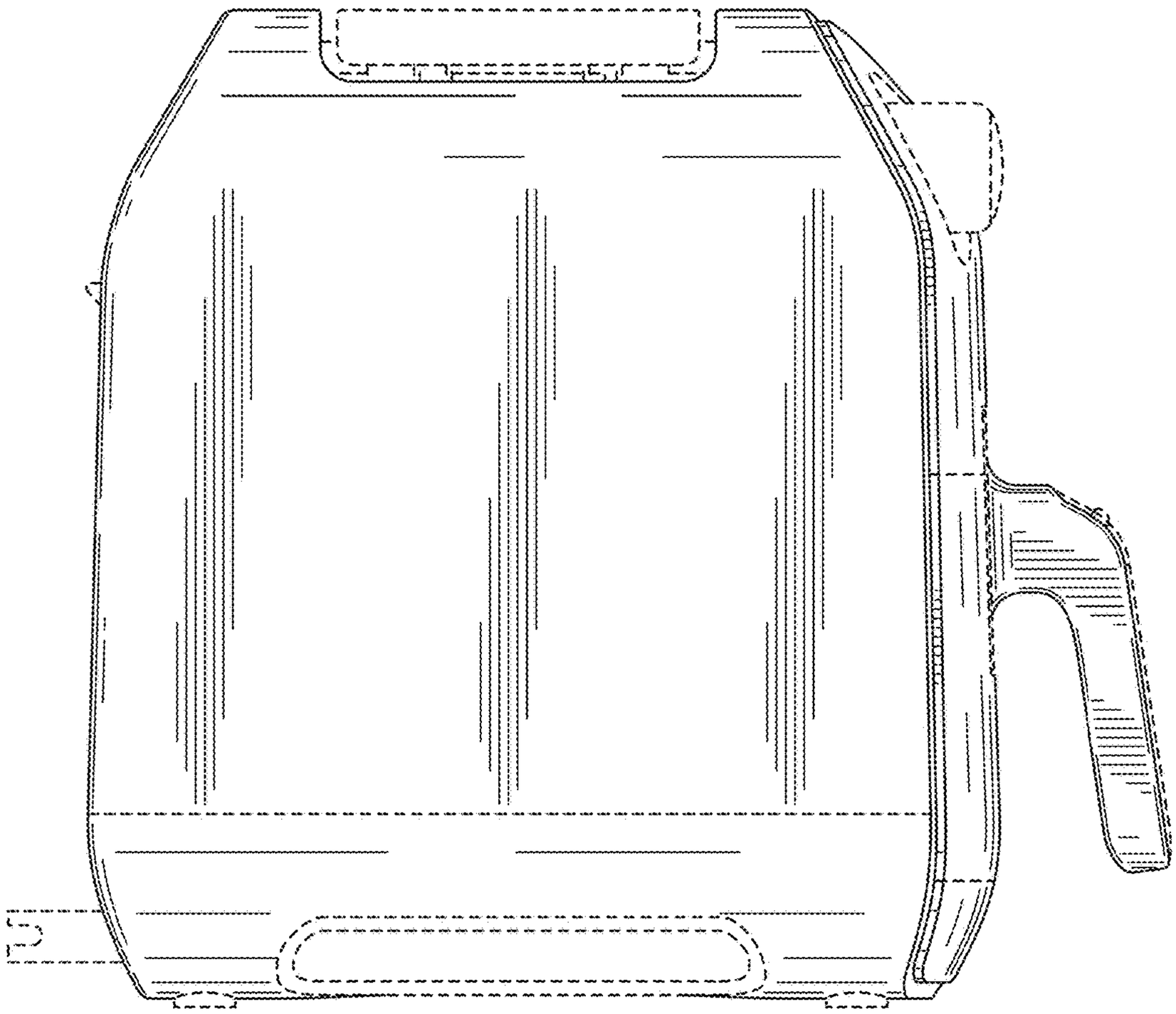

FIG. 4

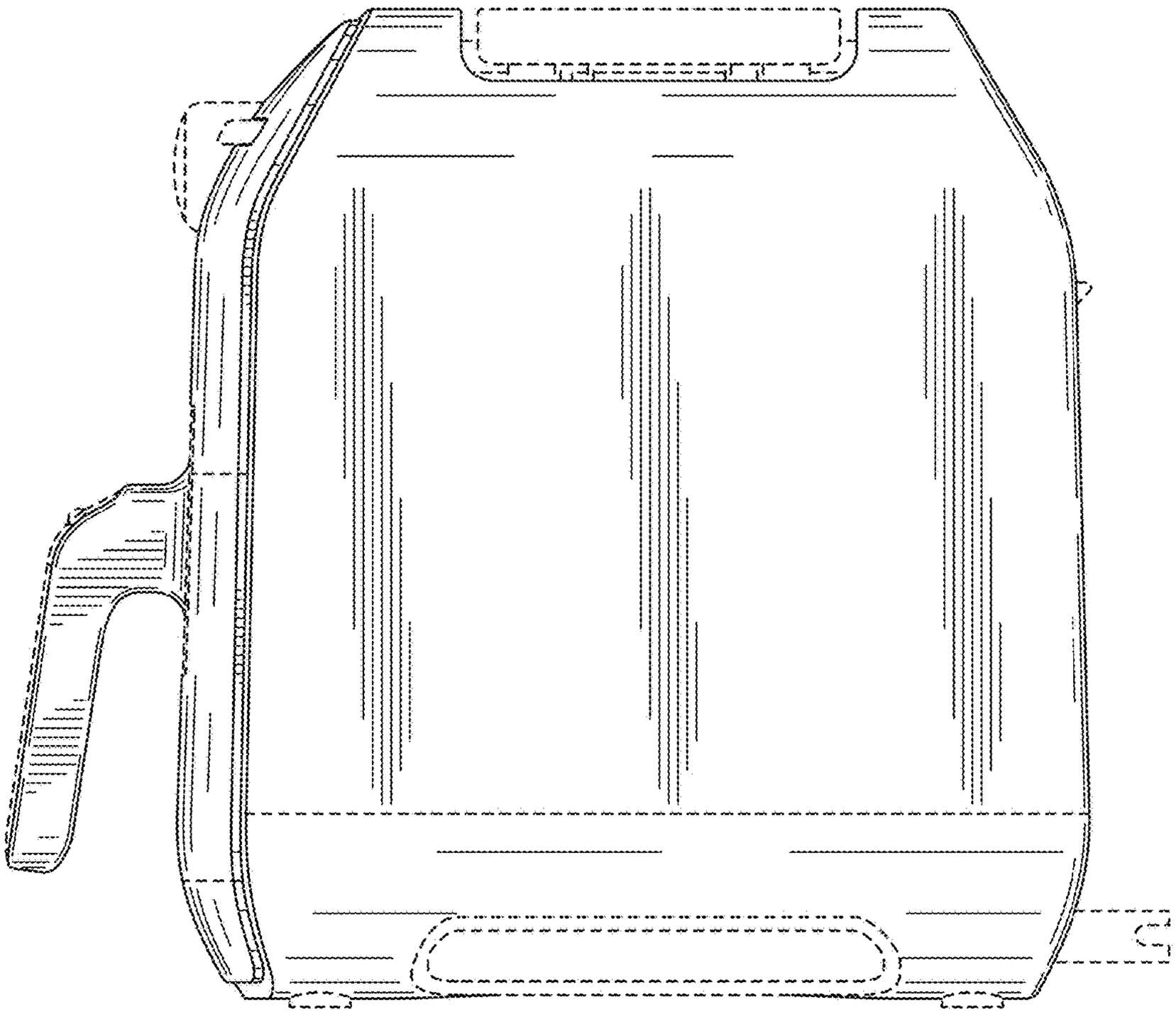

FIG. 5

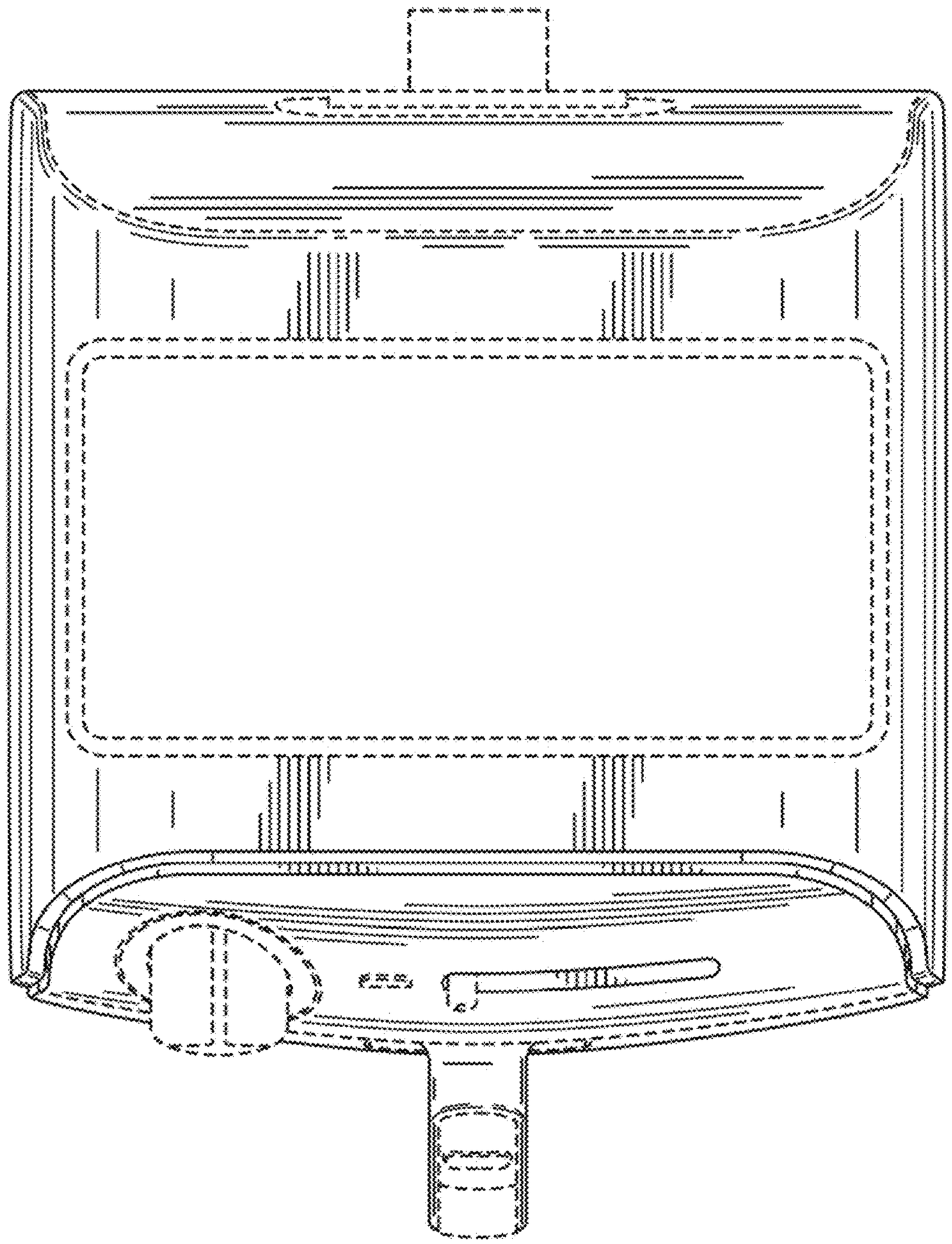

FIG. 6

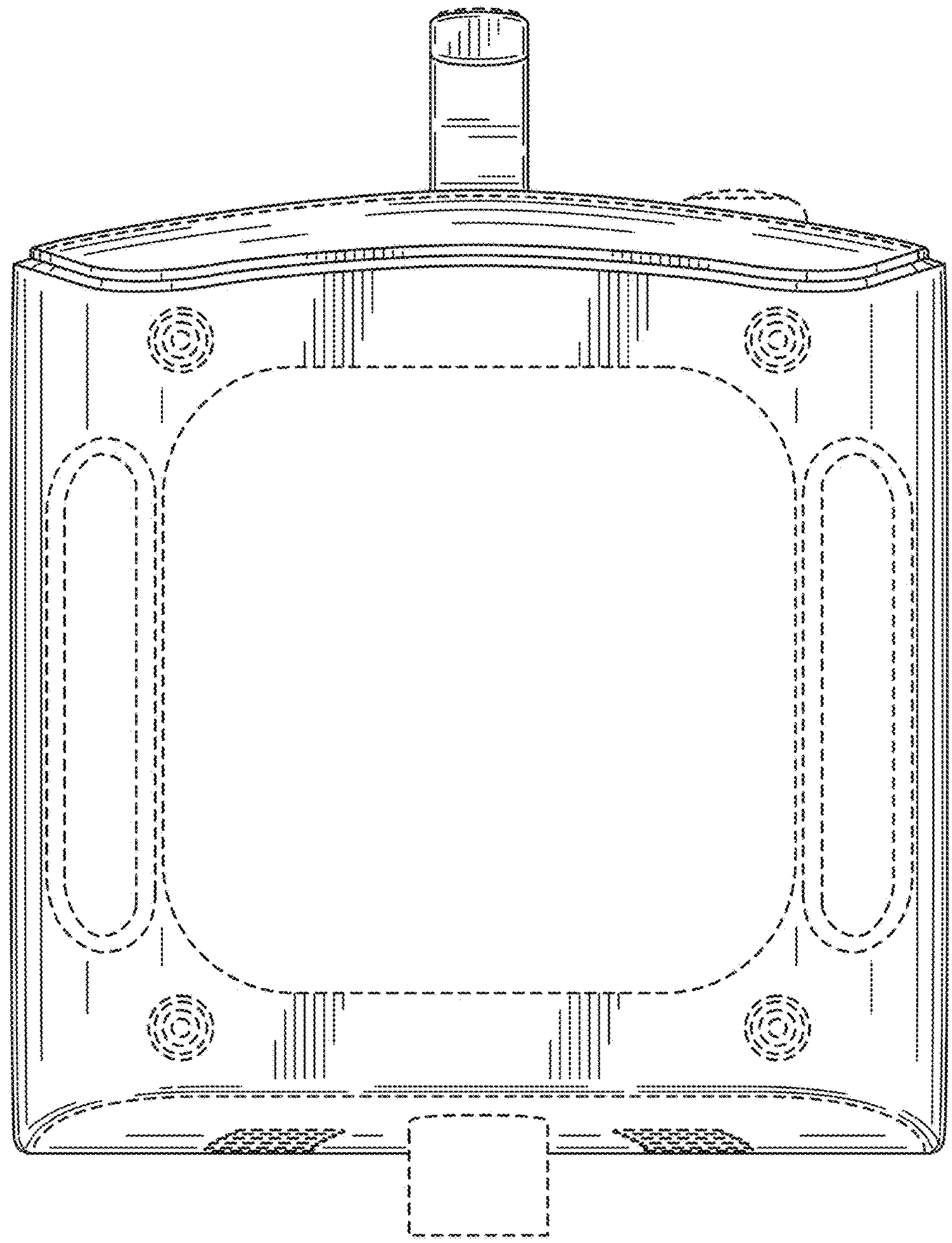

FIG. 7