US00D836339S

(12) United States Design Patent

Winn et al.

(10) Patent No.: US D836,339 S
(45) Date of Patent: ** Dec. 25, 2018

(54) **FLAT LYING FOLDABLE CONTAINER WITH AN INTEGRATED LID**

(71) Applicants: **Tyler N. Winn**, Cedar Hills, UT (US); **Travis J. Winn**, Salt Lake City, UT (US)

(72) Inventors: **Tyler N. Winn**, Cedar Hills, UT (US); **Travis J. Winn**, Salt Lake City, UT (US)

(**) Term: **15 Years**

(21) Appl. No.: **29/552,319**

(22) Filed: **Jan. 21, 2016**

Related U.S. Application Data

(63) Continuation-in-part of application No. 14/174,411, filed on Feb. 6, 2014.

(51) **LOC (11) Cl.** **03-01**

(52) **U.S. Cl.**
USPC **D3/294**

(58) **Field of Classification Search**
USPC D3/273, 274, 275, 276, 281, 284, 292, D3/294, 295, 296, 297, 299, 905, 901,
(Continued)

(56) **References Cited**

U.S. PATENT DOCUMENTS

2,841,306 A 7/1958 Vitoux
3,156,371 A 11/1964 Harrison
(Continued)

OTHER PUBLICATIONS

U.S. Appl. No. 14/174,411, filed Feb. 6, 2014, Winn et al.
(Continued)

Primary Examiner — Sandra S Snapp
Assistant Examiner — Holly E Thurman

(74) *Attorney, Agent, or Firm* — Workman Nydegger

(57) **CLAIM**

The ornamental design for a flat lying foldable container with an integrated lid, as shown and described.

DESCRIPTION

FIG. **1** is a top, rear perspective view of a flat lying foldable container with an integrated lid according to the present invention, in its assembled configuration;
FIG. **2** is a bottom, front perspective view of the flat lying foldable container with an integrated lid of FIG. **1**;
FIG. **3** is a front view of the flat lying foldable container with an integrated lid of FIG. **1**;
FIG. **4** is a rear view of the flat lying foldable container with an integrated lid of FIG. **1**;
FIG. **5** is a top view of the flat lying foldable container with an integrated lid of FIG. **1**;
FIG. **6** is a bottom view of the flat lying foldable container with an integrated lid of FIG. **1**;
FIG. **7** is a first side view of the flat lying foldable container with an integrated lid of FIG. **1**;
FIG. **8** is a second, opposite side view of the flat lying foldable container with an integrated lid of FIG. **1**;
FIG. **9** is a perspective view of the flat lying foldable container with an integrated lid of FIG. **1**, with the lid open;
FIG. **10** is a top perspective view of the flat lying foldable container with an integrated lid of FIG. **1**, in a collapsed configuration;
FIG. **11** is a bottom perspective view of the flat lying foldable container with an integrated lid of FIG. **1** (i.e., the container in FIG. **11** has been flipped over relative to FIG. **10**);
FIG. **12** is a first end view of the flat lying foldable container with an integrated lid of FIG. **10**;
FIG. **13** is an opposite end view of the flat lying foldable container with an integrated lid of FIG. **10**;
FIG. **14** is a top view of the flat lying foldable container with an integrated lid of FIG. **10**;
FIG. **15** is a bottom view of the flat lying foldable container with an integrated lid of FIG. **10**;
FIG. **16** is a first side view of the flat lying foldable container with an integrated lid of FIG. **10**;
(Continued)

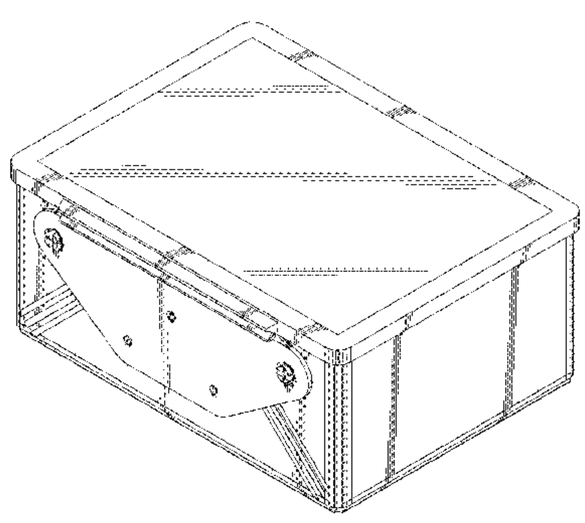

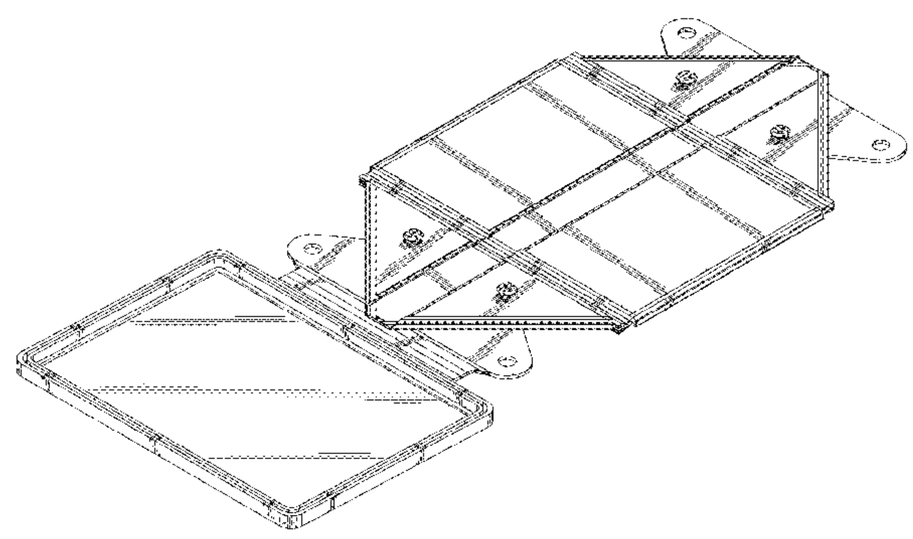

FIG. **17** is a second, opposite side view of the flat lying foldable container with an integrated lid of FIG. **10**; and, FIG. **18** is a side view similar to that of FIG. **17**, but with the lid of the container folded under the flat lying container. Any broken lines shown are directed to environmental structure and are for illustrative purposes only. Any broken lines form no part of the claimed design.

1 Claim, 13 Drawing Sheets

(58) **Field of Classification Search**
USPC D3/903, 205, 203.1, 279, 282, 242, 301, D3/302; D9/418, 420–423
CPC .. A45C 5/00; A45C 5/04; A45C 11/00; A45C 11/16
See application file for complete search history.

(56) **References Cited**

U.S. PATENT DOCUMENTS

4,010,865	A	3/1977	Wilgus	
4,790,714	A *	12/1988	Schnapp	A63H 33/16 446/486
4,791,883	A *	12/1988	Lehman	A01K 1/0125 119/168
D415,680	S *	10/1999	Sheffer	D9/432
6,092,687	A	7/2000	Hupp et al.	
6,116,501	A	9/2000	Hupp	
6,126,065	A *	10/2000	Wee	B65D 5/2047 229/114
D442,081	S *	5/2001	Paul	D9/423
6,299,011	B1 *	10/2001	Rosenfeldt	B65D 9/38 16/388
6,315,151	B1	11/2001	Hupp et al.	
6,325,239	B2	12/2001	Randall et al.	
6,899,460	B2	5/2005	Turvey et al.	
6,920,993	B2	7/2005	Sheng-Bin	
6,923,516	B2	8/2005	Sheng-Bin	
7,011,224	B2	3/2006	Sheng-Bin	
7,017,776	B1	3/2006	Hupp	
7,178,687	B1	2/2007	Manderfield, Jr. et al.	
D596,936	S	7/2009	Bierschenk et al.	
7,597,209	B2	10/2009	Rothschild et al.	
7,631,799	B2	12/2009	Turvey et al.	
7,654,402	B2	2/2010	Kusuma et al.	
7,699,212	B2	4/2010	Turvey et al.	
7,854,370	B2	12/2010	Turvey et al.	
8,033,411	B2	10/2011	Turvey et al.	
8,066,136	B2	11/2011	Turvey et al.	
8,146,763	B2	4/2012	Turvey et al.	
8,146,773	B2	4/2012	Turvey et al.	
2002/0070267	A1	6/2002	Okamura et al.	
2004/0164132	A1 *	8/2004	Kuester	B65D 1/225 229/117.06
2005/0035125	A1 *	2/2005	Bae	B65D 43/0218 220/326
2005/0061810	A1	3/2005	Nordland	
2005/0087530	A1	4/2005	Svenson	
2009/0090709	A1	4/2009	Shalomoff	
2012/0024941	A1	2/2012	Skinner	

OTHER PUBLICATIONS

U.S. Appl. No. 14/174,411, dated Feb. 5, 2015, Restriction Requirement.

U.S. Appl. No. 14/174,411, dated Apr. 14, 2015, Office Action.

U.S. Appl. No. 14/174,411, dated Oct. 21, 2015, Final Office Action.

* cited by examiner

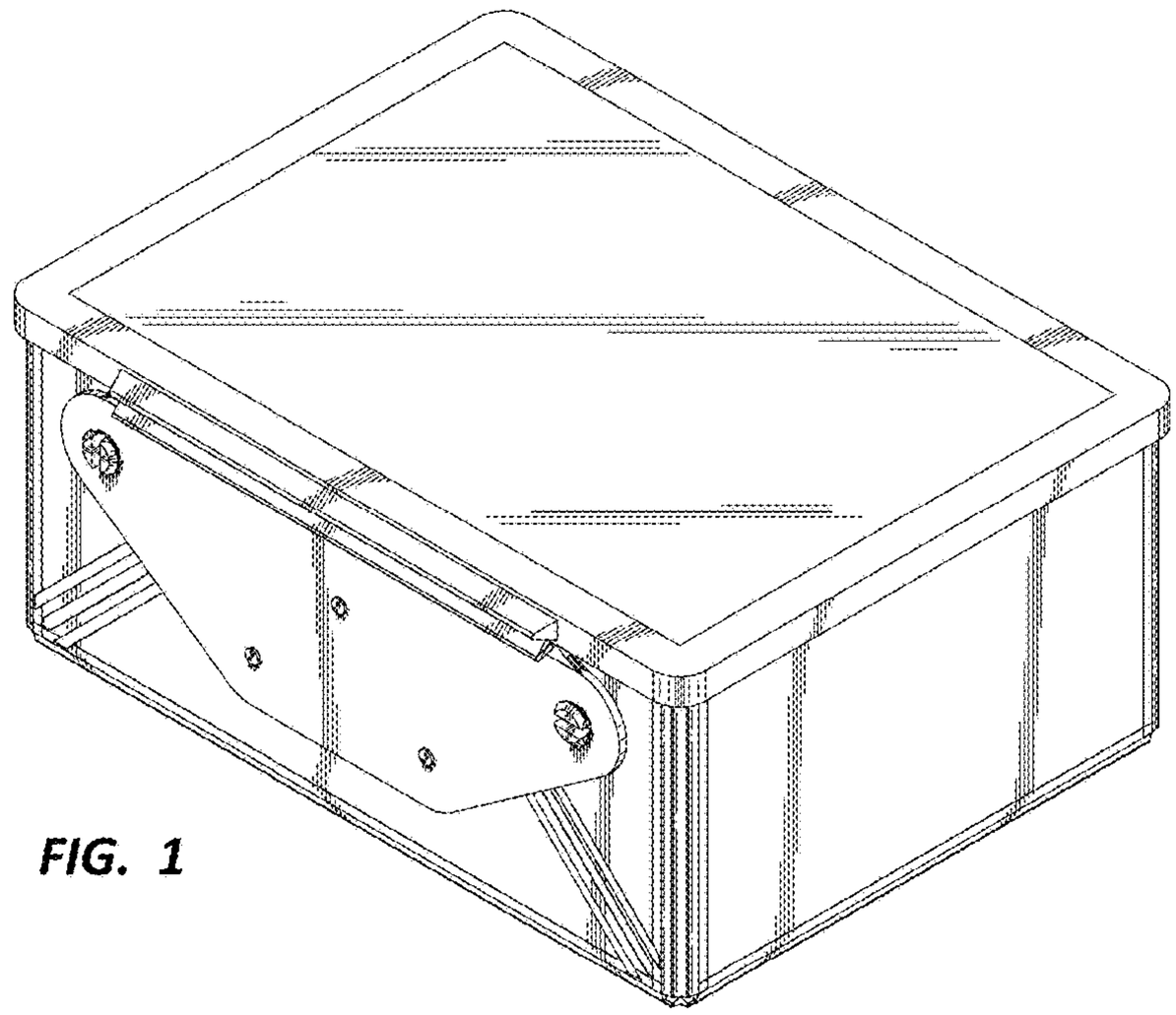

FIG. 1

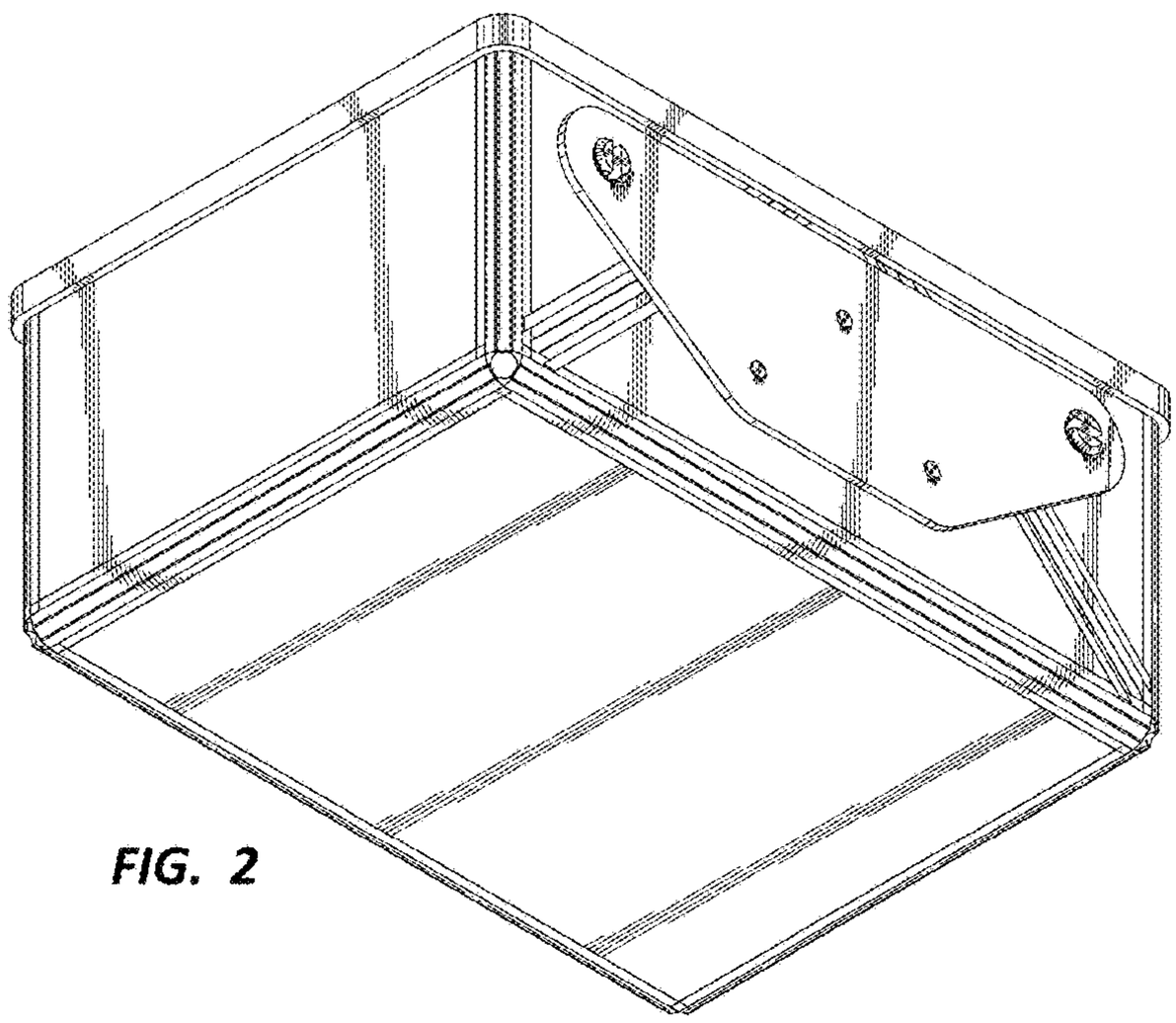

FIG. 2

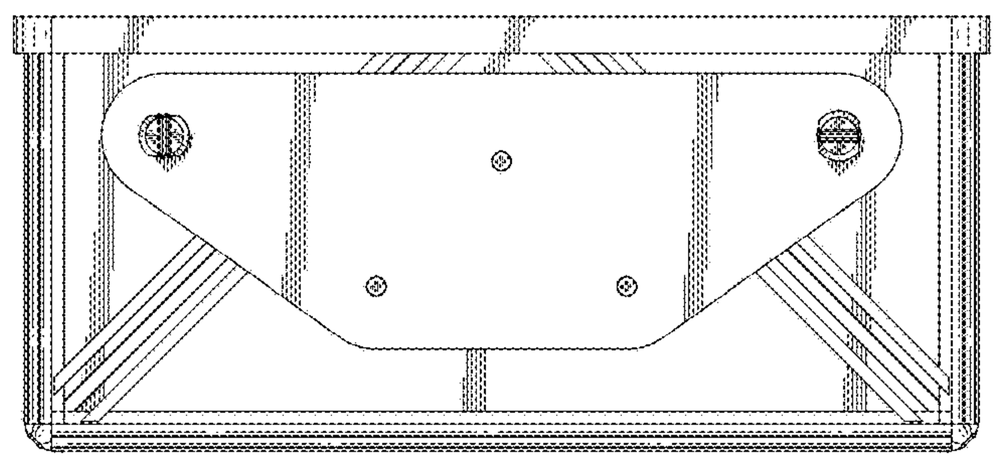

FIG. 3

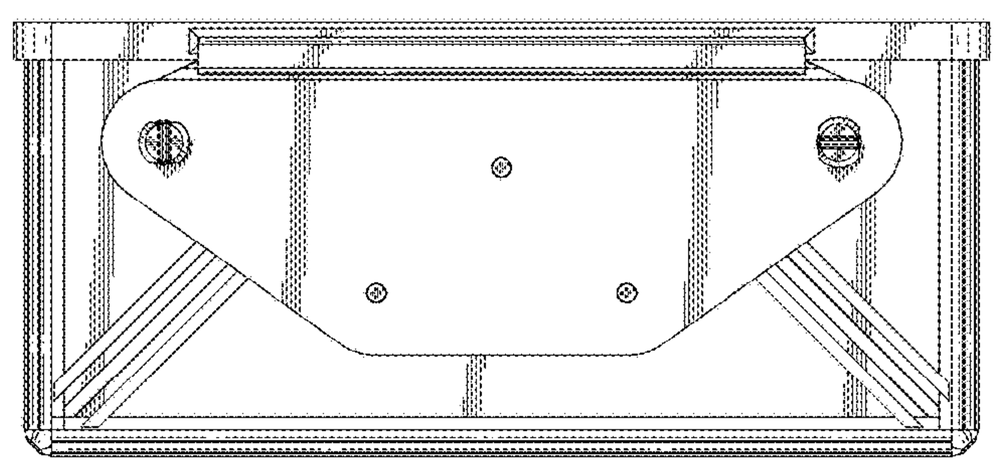

FIG. 4

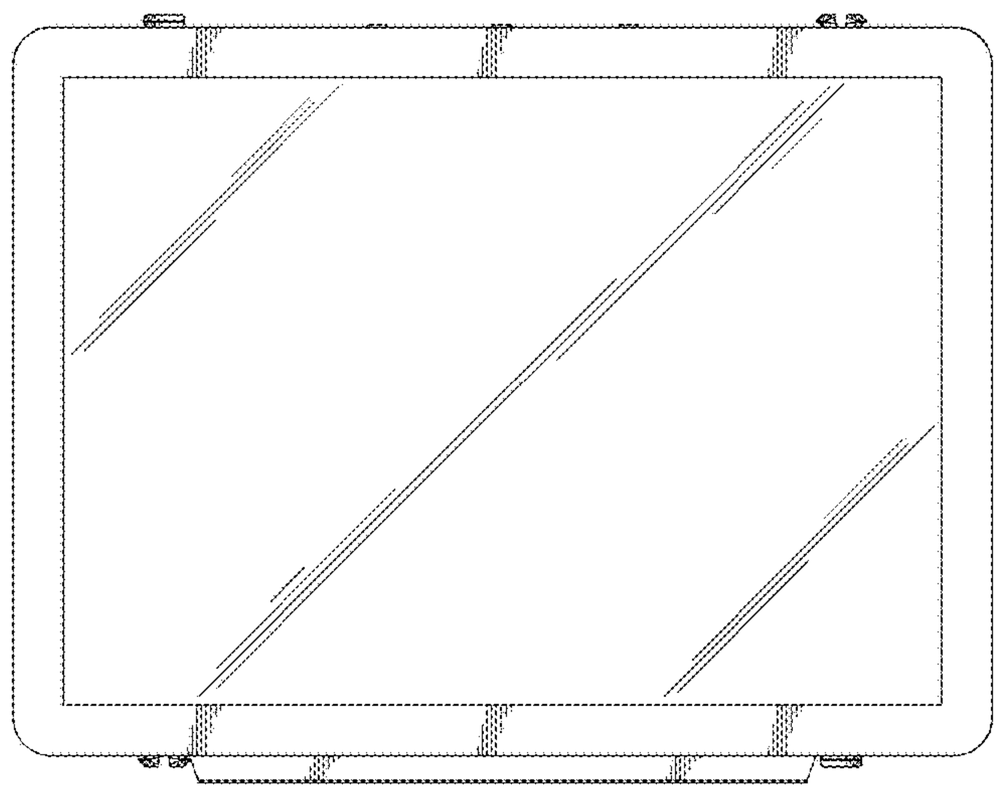

FIG. 5

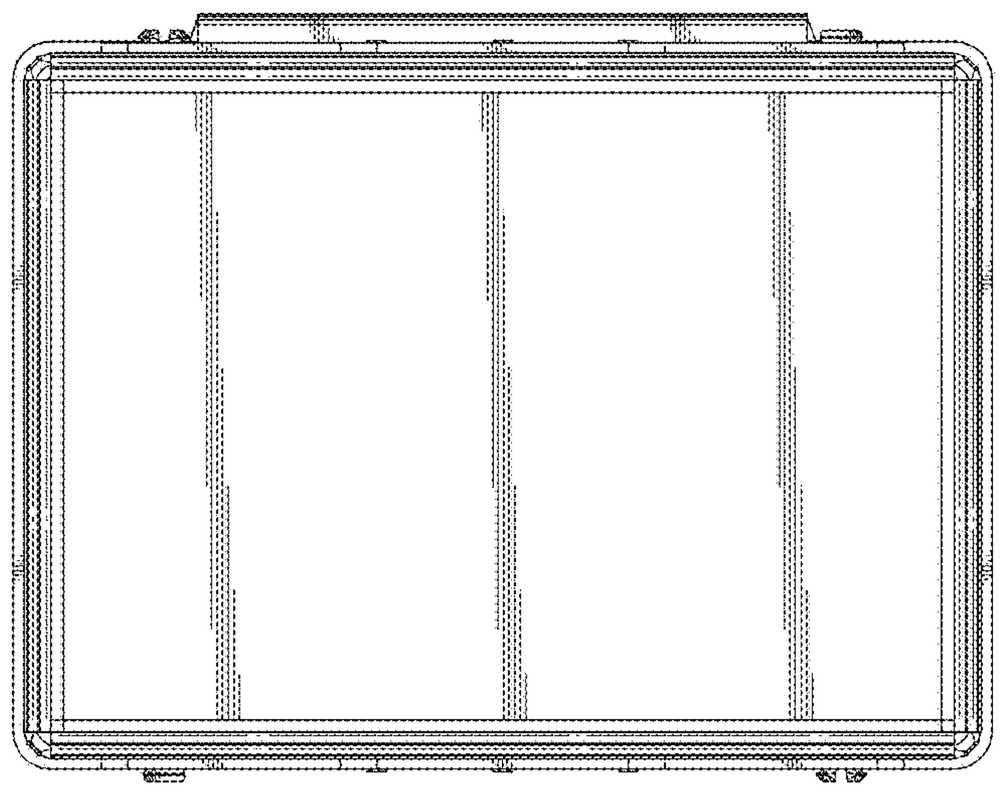

FIG. 6

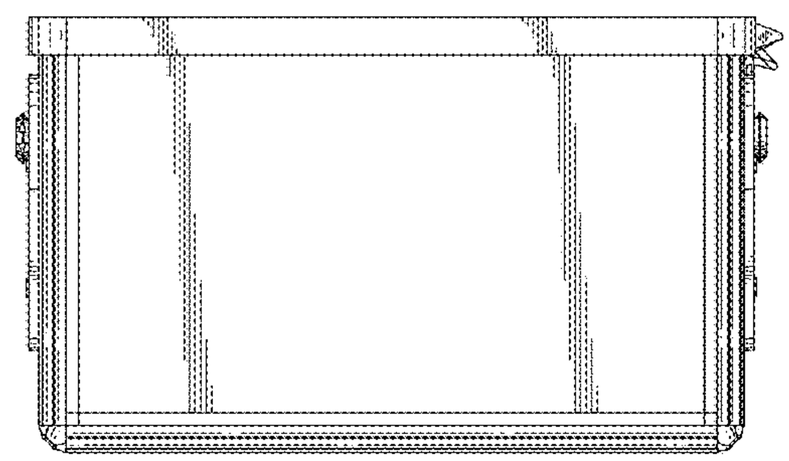

FIG. 7

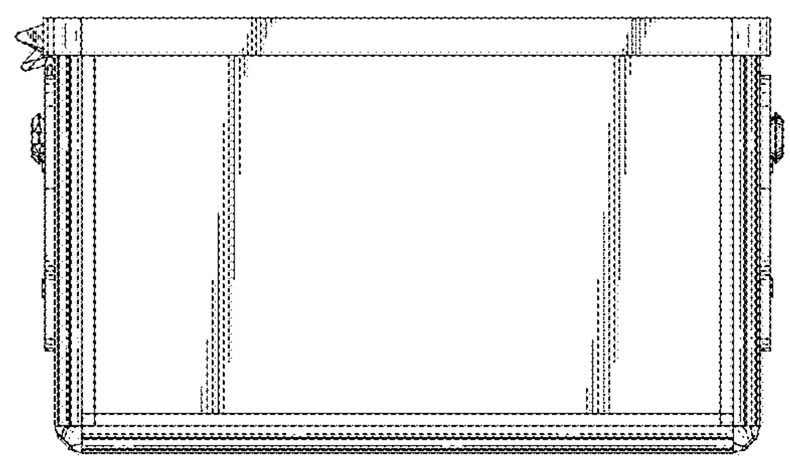

FIG. 8

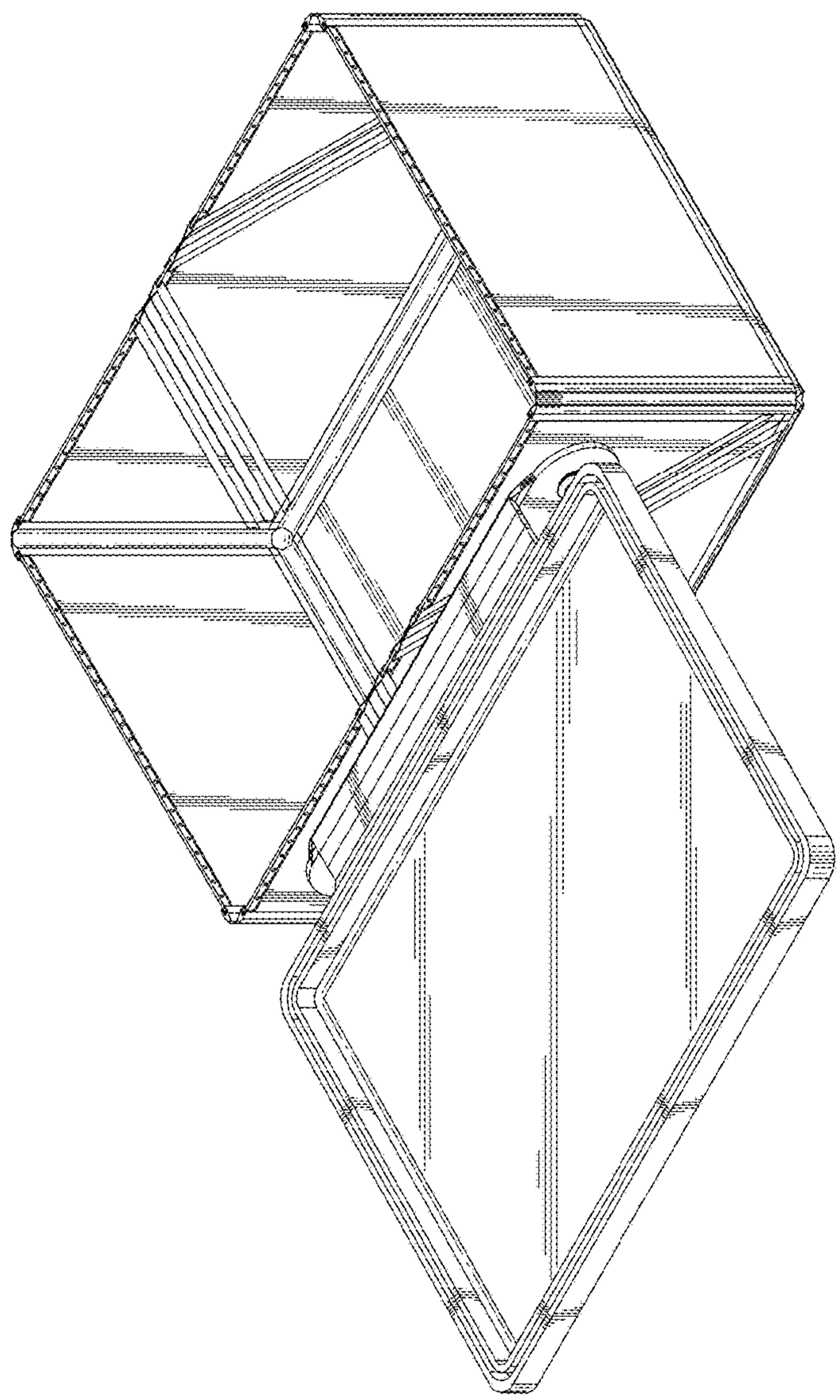

FIG. 9

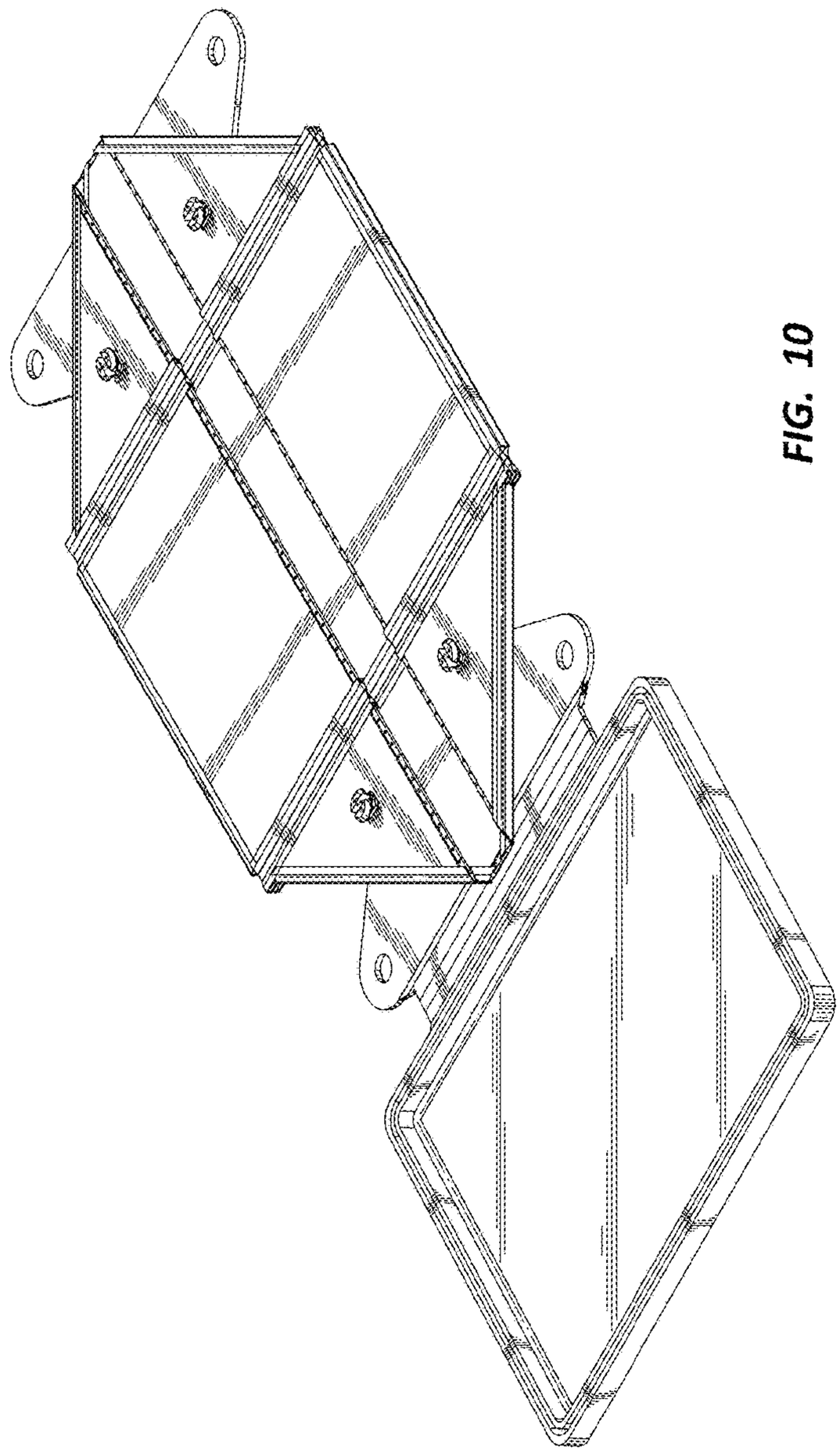

FIG. 10

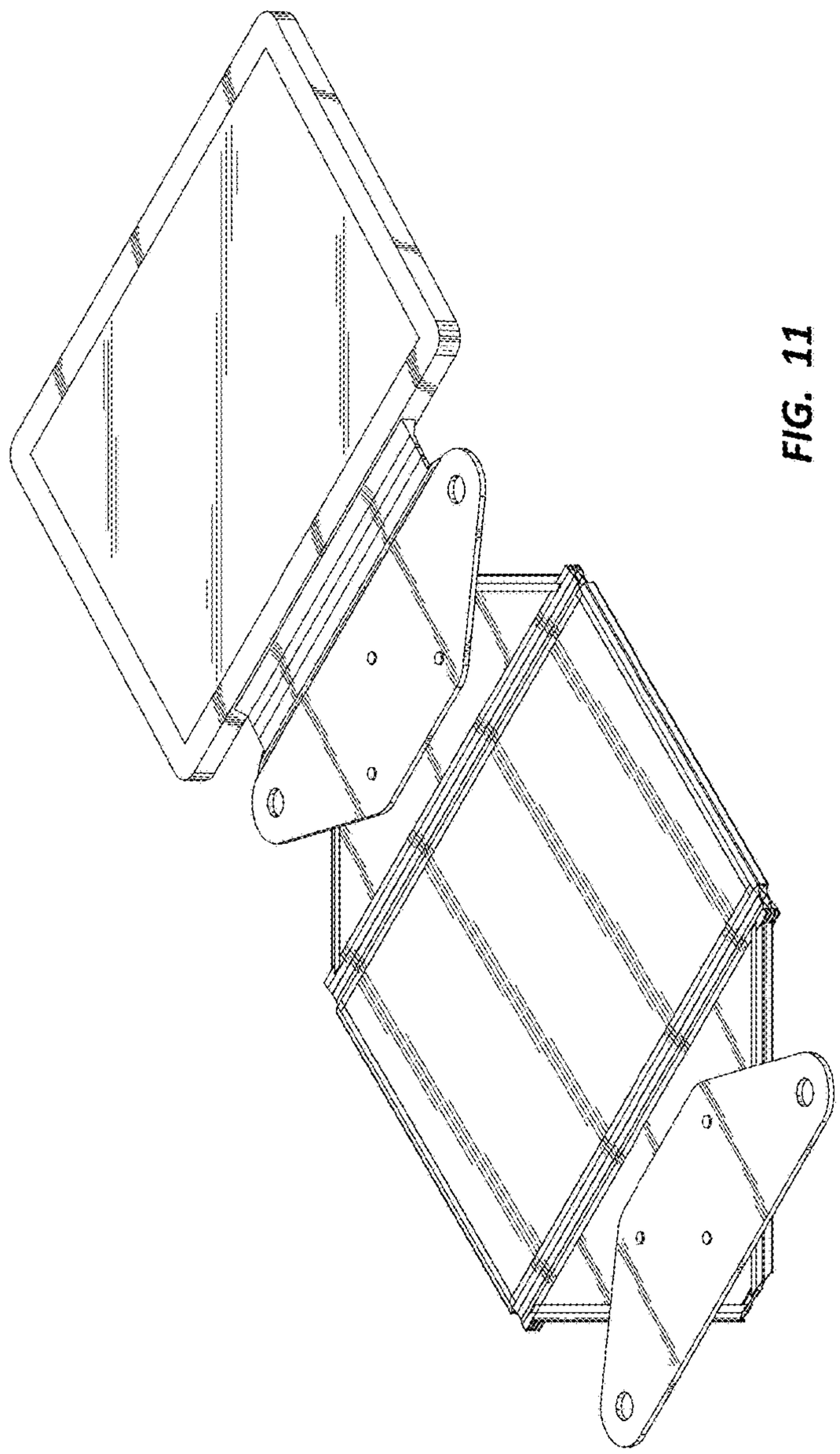

FIG. 11

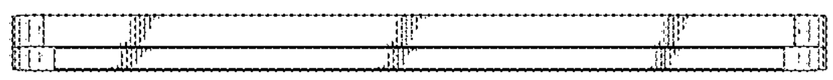

FIG. 12

FIG. 13

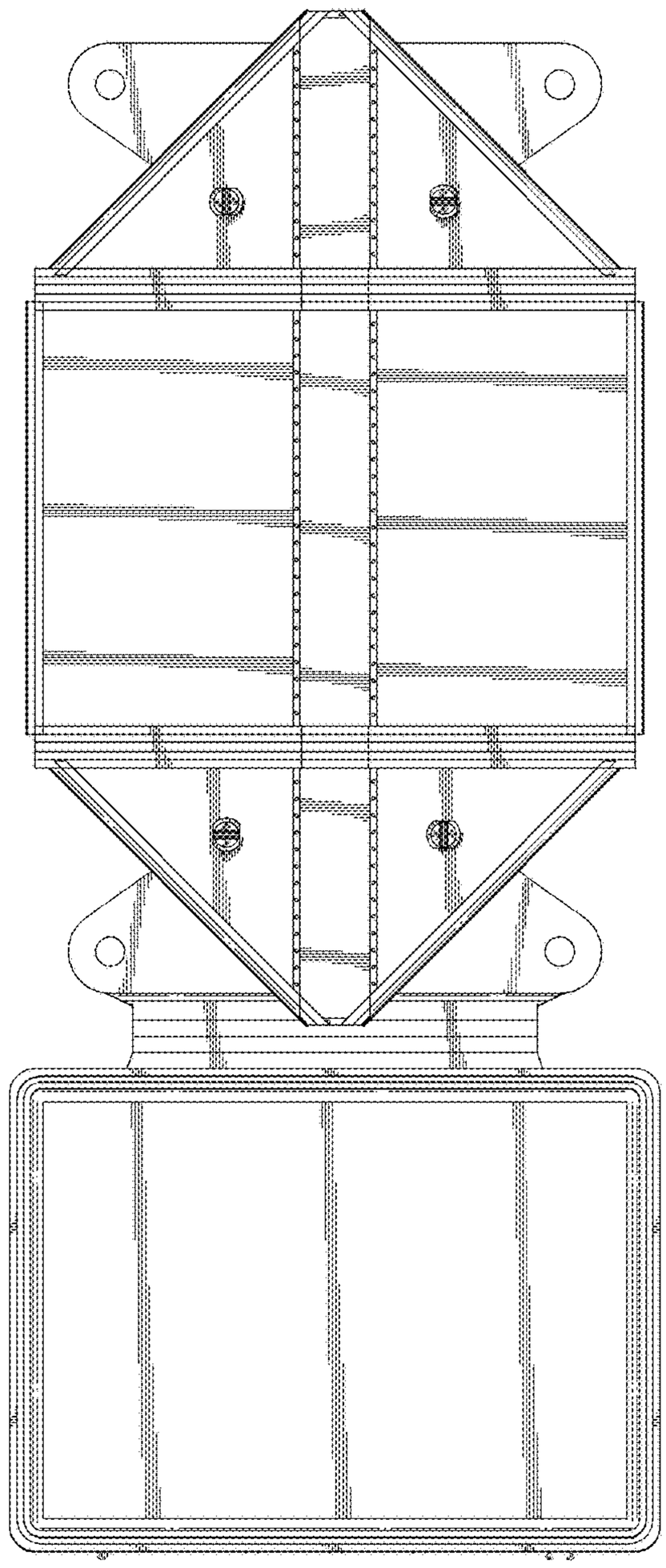

FIG. 14

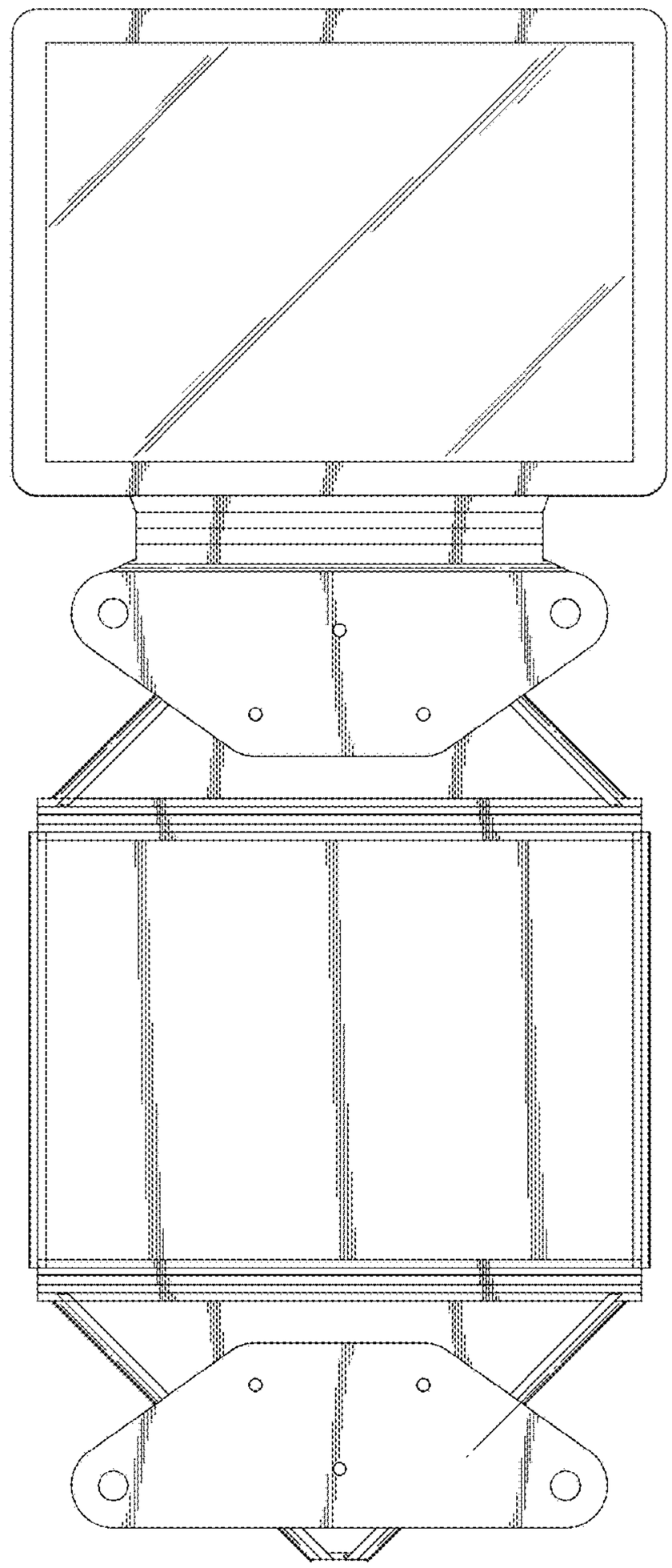

FIG. 15

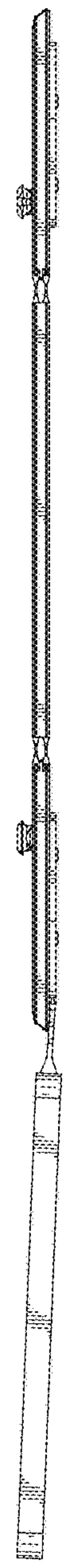

FIG. 16

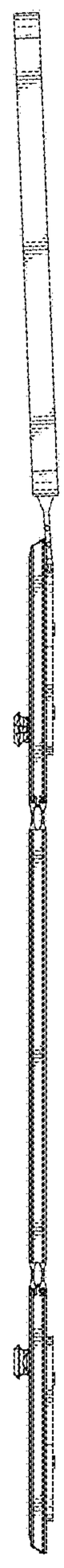

FIG. 17

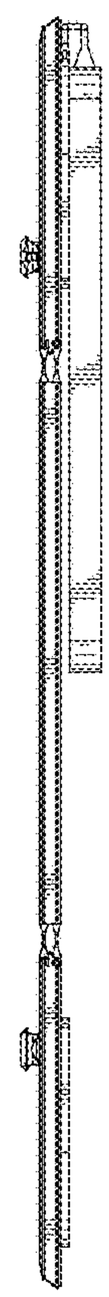

FIG. 18