US00D836235S

(12) United States Design Patent

Snell et al.

(10) Patent No.: US D836,235 S
(45) Date of Patent: ** Dec. 18, 2018

(54) **ROADWAY LUMINAIRE**

(71) Applicant: **Cree, Inc.**, Durham, NC (US)

(72) Inventors: **Nathan Snell**, Raleigh, NC (US); **Jeremy Sorenson**, Oak Creek, WI (US)

(73) Assignee: **Cree, Inc.**, Durham, NC (US)

(**) Term: **15 Years**

(21) Appl. No.: **29/574,418**

(22) Filed: **Aug. 15, 2016**

Related U.S. Application Data

(62) Division of application No. 29/496,754, filed on Jul. 16, 2014, now Pat. No. Des. 764,091.

(51) **LOC (11) Cl.** **26-05**

(52) **U.S. Cl.**
USPC **D26/71**

(58) **Field of Classification Search**
USPC D26/67–72, 92
CPC .. F21S 8/033; F21S 8/036; F21S 8/085; F21S 8/086; F21S 8/088; F21W 2111/02; F21W 2111/023; F21W 2131/101; F21W 2131/103; F21W 2131/1005; F21W 2131/107; F21V 29/503; F21V 29/745; F21V 29/75; F21V 29/76; F21V 29/763; F21V 29/767; F21V 29/77; F21V 29/78
See application file for complete search history.

(56) **References Cited**

U.S. PATENT DOCUMENTS

3,385,258	A	*	5/1968	Curtin	F21S 8/086 116/200
4,937,718	A	*	6/1990	Murray	F21S 8/086 362/368
D570,025	S		5/2008	Walker	
D572,857	S	*	7/2008	Kauffman	D26/71
D573,292	S		7/2008	Zheng et al.	
D587,839	S		3/2009	Guercio	
D609,384	S		2/2010	Gray et al.	
D612,527	S		3/2010	Espiau et al.	
D616,145	S		5/2010	Boissevain	
D668,370	S		10/2012	Guercio et al.	
D670,856	S		11/2012	Butler et al.	
D694,449	S		11/2013	Walker et al.	
D743,082	S	*	11/2015	Neri	D26/71
D760,936	S	*	7/2016	Jurdana	D26/71
D760,937	S	*	7/2016	Jurdana	D26/71

(Continued)

Primary Examiner — Clare E Heflin
(74) *Attorney, Agent, or Firm* — McDermott Will & Emery LLP

(57) **CLAIM**

The ornamental design for a roadway luminaire, as shown and described.

DESCRIPTION

FIG. **1** is an isometric view of a top, front, and right side of an ornamental design for a roadway luminaire;
FIG. **2** is an isometric view of a bottom, front, and right side view of the roadway luminaire of FIG. **1**;
FIG. **3** is a top plan view of the roadway luminaire of FIG. **1**;
FIG. **4** is a bottom plan view of the roadway luminaire fixture of FIG. **1**;
FIG. **5** is a right side elevational view of the roadway luminaire fixture of FIG. **1**, a left side elevational view of the roadway luminaire being a mirror image of the right side elevational view;
FIG. **6** is a front elevational view of the roadway luminaire of FIG. **1**; and,
FIG. **7** is a rear elevational view of the roadway luminaire of FIG. **1**.
The broken lines shown in the drawings depict portions of the roadway luminaire that form no part of the claimed design.

1 Claim, 7 Drawing Sheets

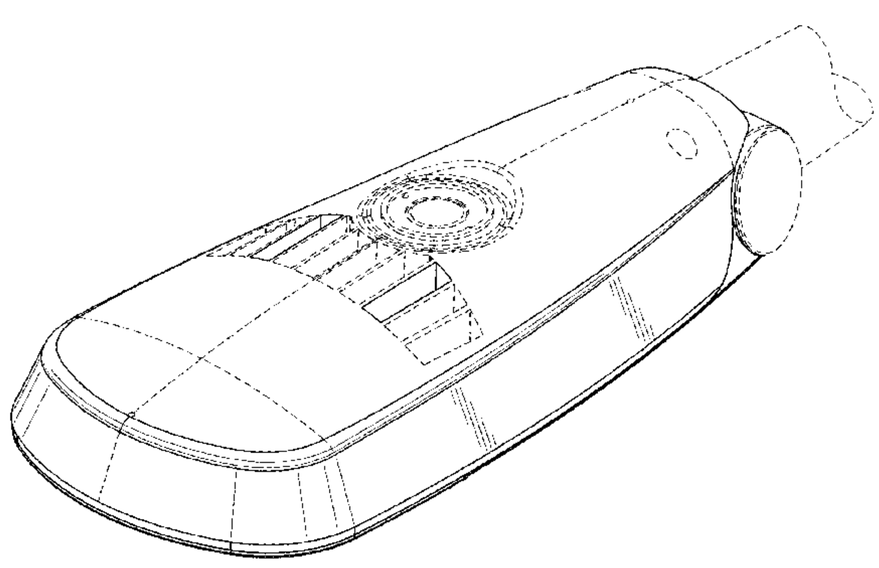

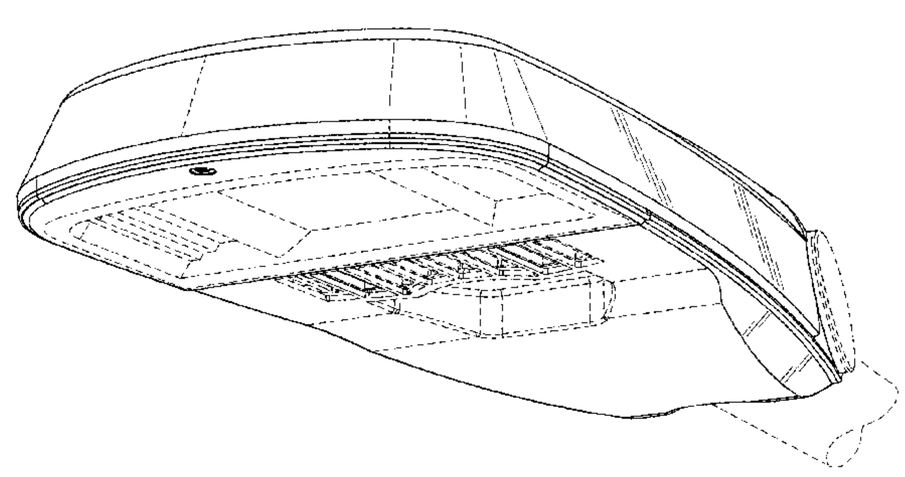

(56) **References Cited**

U.S. PATENT DOCUMENTS

D764,091	S *	8/2016	Snell	D26/71
9,581,304	B2 *	2/2017	Carlen	F21S 8/086
D782,719	S *	3/2017	Snell	D26/71
9,593,843	B2 *	3/2017	McRory	H04N 7/185
D792,627	S *	7/2017	Snell	D26/71
9,759,409	B2 *	9/2017	Durdle	F21V 17/18
2012/0127738	A1 *	5/2012	DeKalb	F21V 29/004 362/373
2013/0121006	A1 *	5/2013	Moshtagh	F21V 31/005 362/373
2016/0186970	A1 *	6/2016	Sorenson	F21S 8/086 362/234
2016/0187555	A1 *	6/2016	Yuan	G02B 6/002 362/343

* cited by examiner

Fig. 1

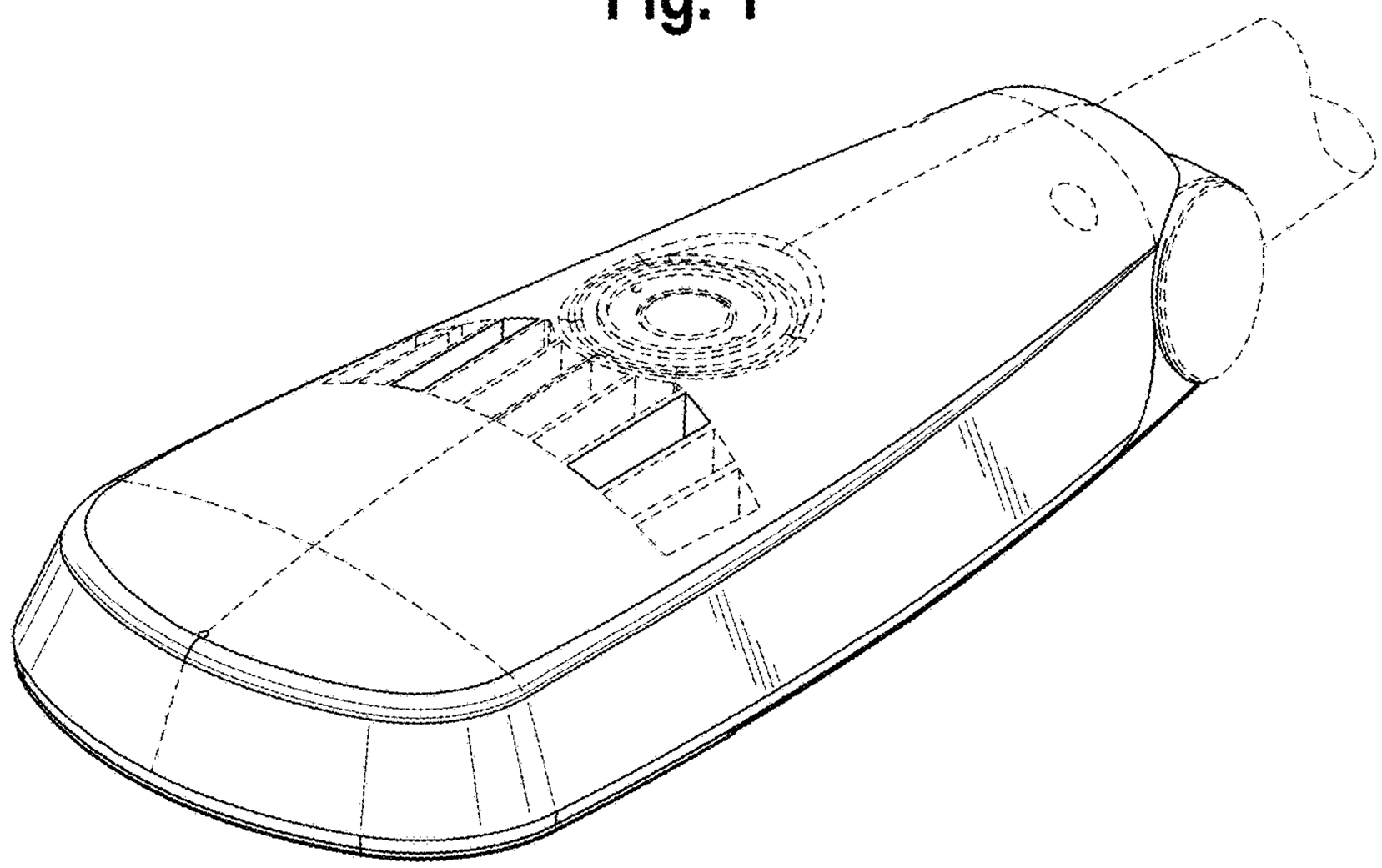

Fig. 2

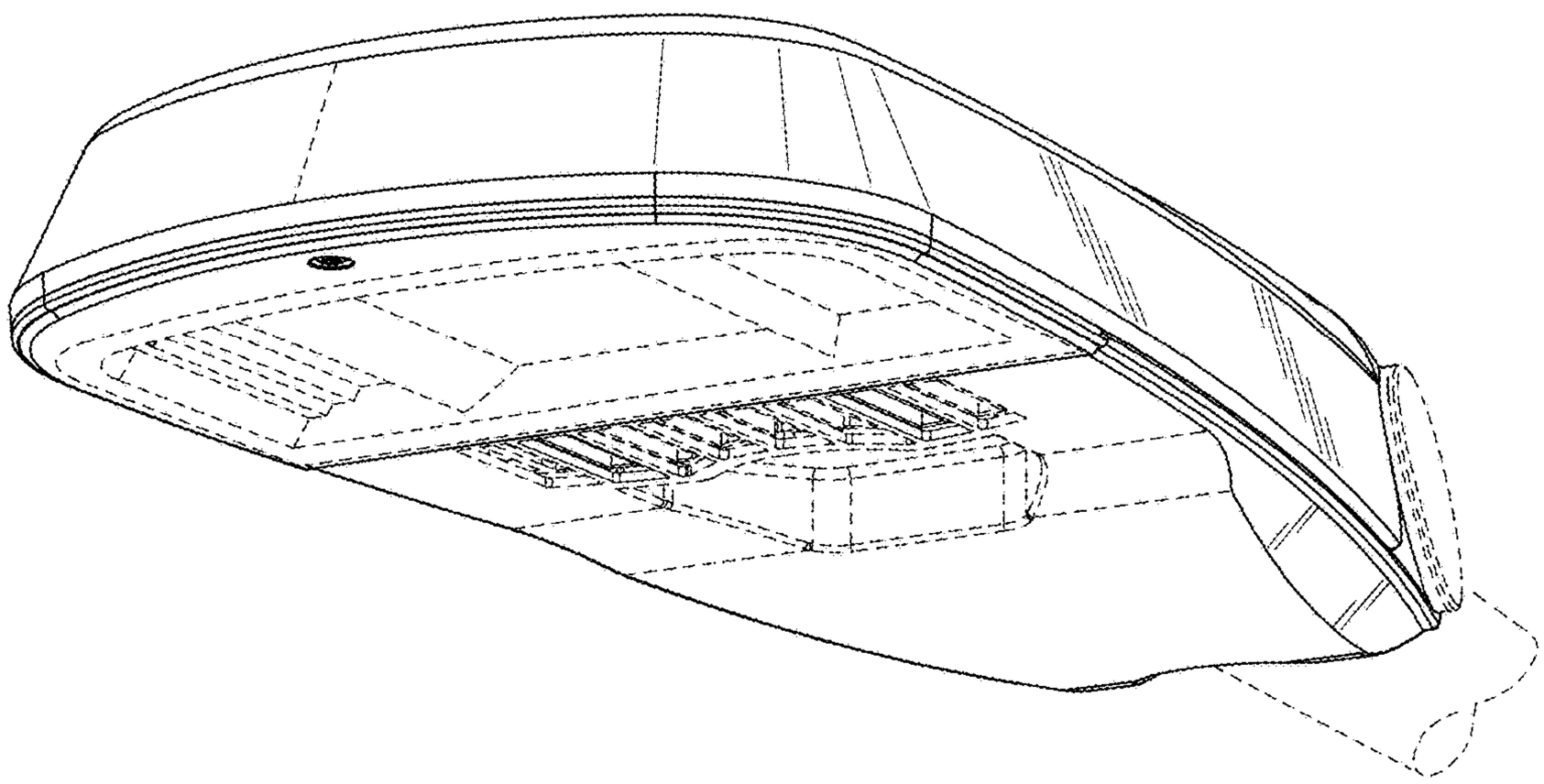

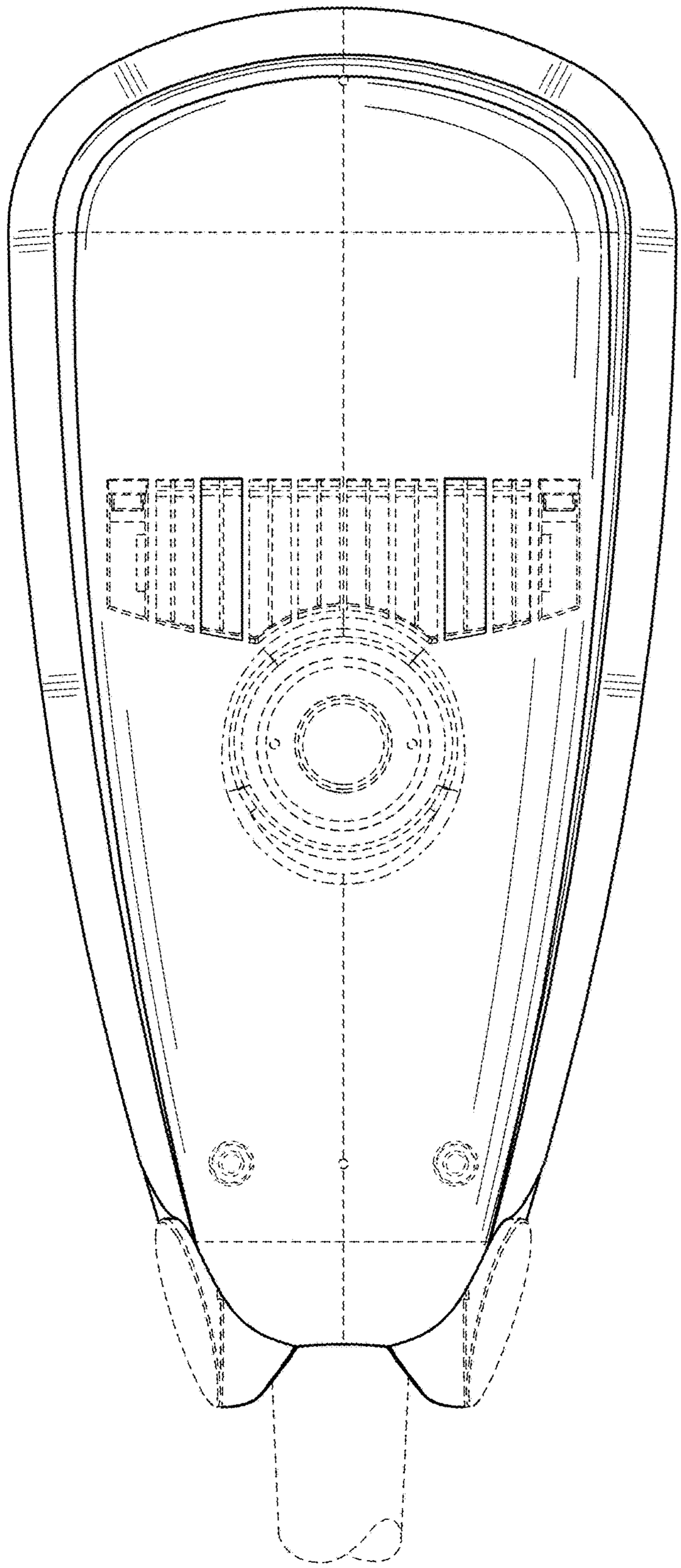

Fig. 3

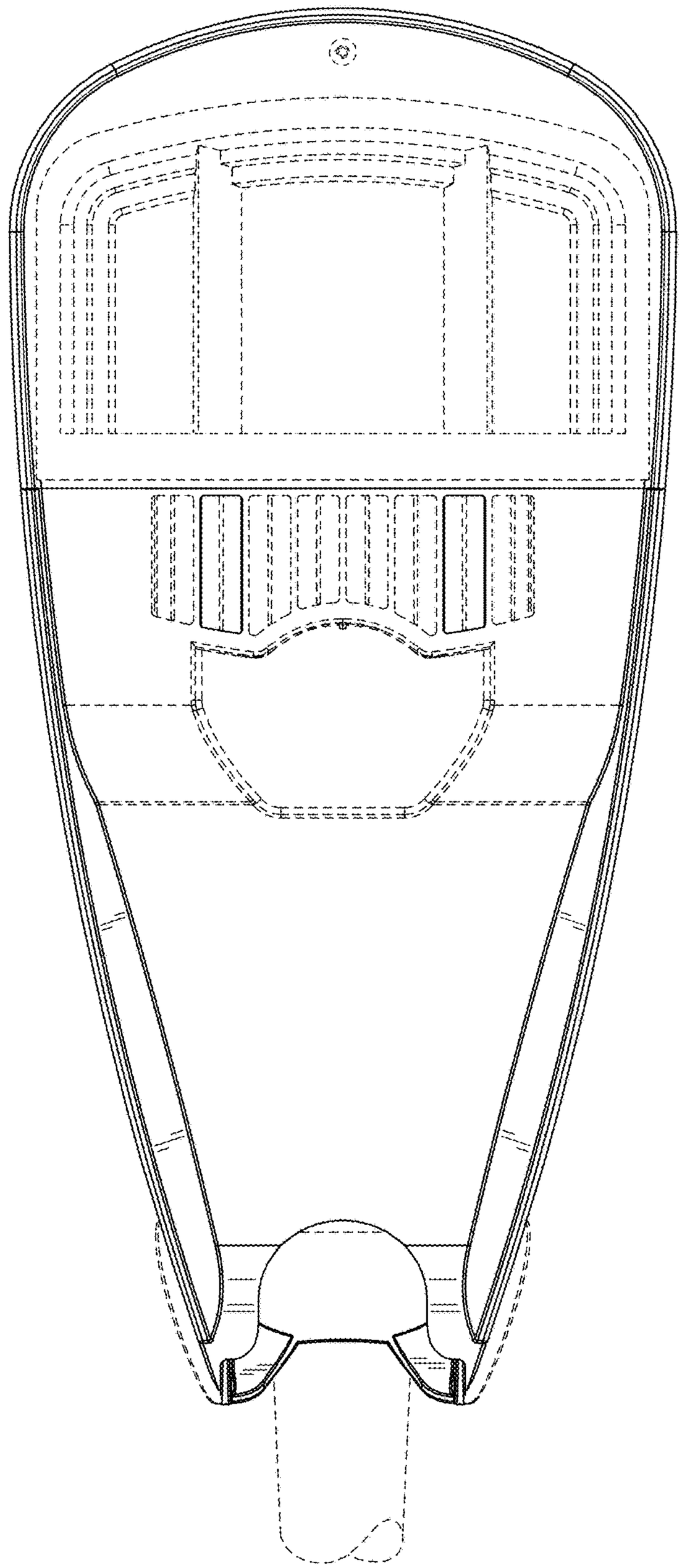

Fig. 4

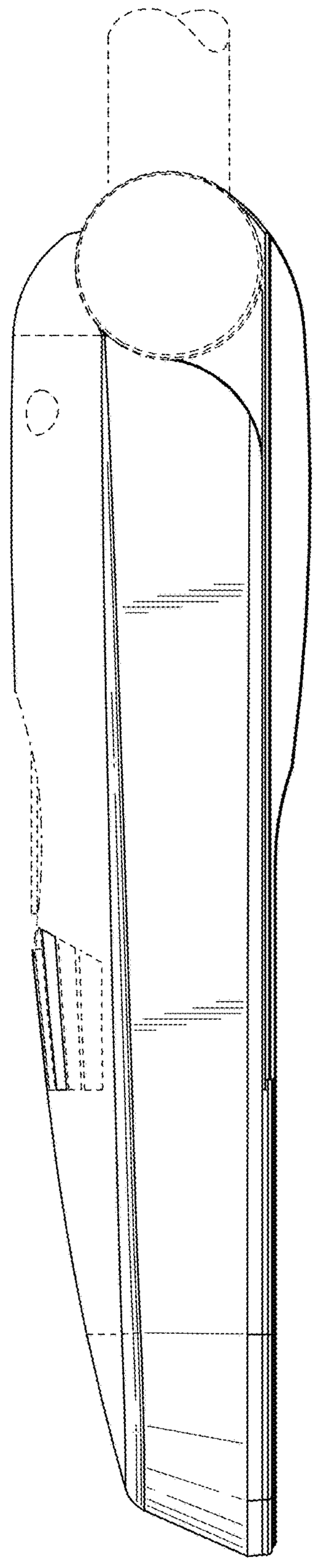

Fig. 5

Fig. 6

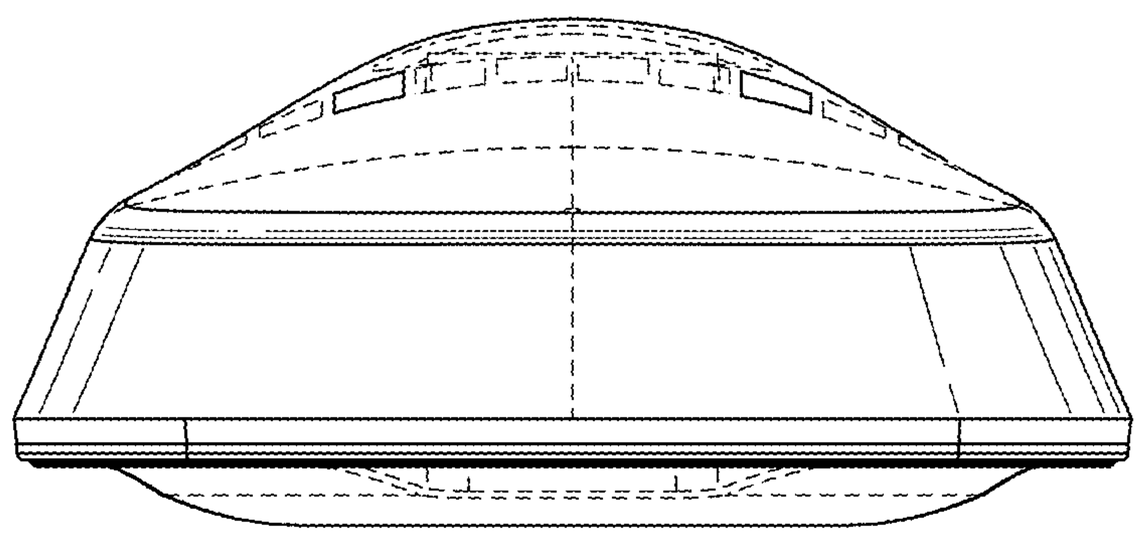
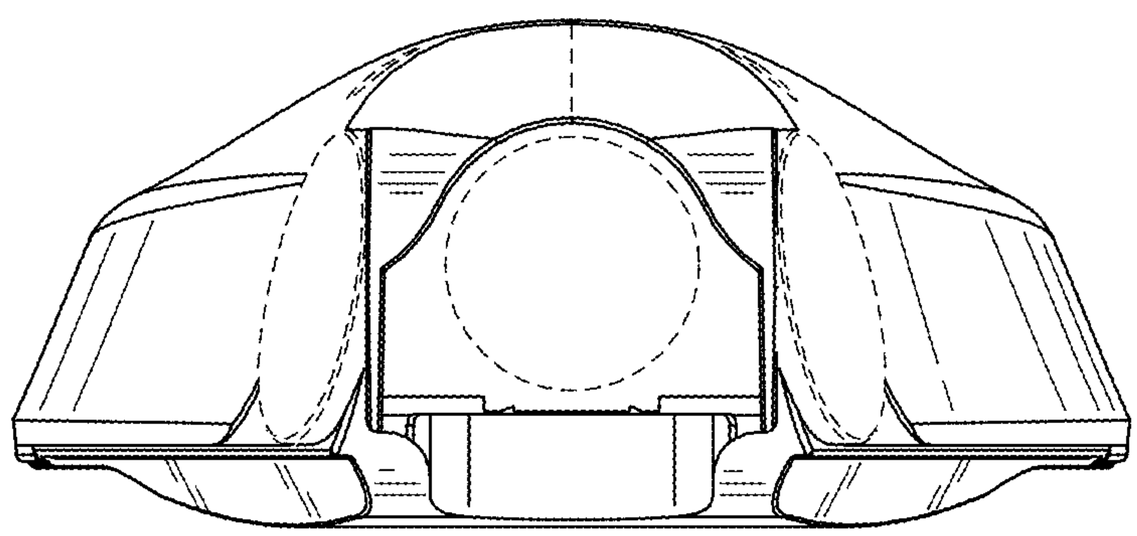
Fig. 7