US00D835175S

(12) United States Design Patent

Kim et al.

(10) Patent No.: US D835,175 S
(45) Date of Patent: ** Dec. 4, 2018

(54) **CAMERA GIMBAL**

(71) Applicant: **SZ DJI TECHNOLOGY CO., LTD.**, Shenzhen (CN)

(72) Inventors: **Min Kim**, Shenzhen (CN); **Peng Bin**, Shenzhen (CN); **Tian-Hang Ma**, Shenzhen (CN)

(73) Assignee: **SZ DJI TECHNOLOGY CO., LTD.**, Shenzhen (CN)

(**) Term: **15 Years**

(21) Appl. No.: **29/600,661**

(22) Filed: **Apr. 13, 2017**

(51) **LOC (11) Cl.** **16-05**

(52) **U.S. Cl.**
USPC **D16/237**

(58) **Field of Classification Search**
USPC D16/208, 213–219, 235–250; D14/217, D14/229, 250–253; D8/363, 373, 394
CPC G03B 17/02–17/04; G03B 17/14; G03B 17/56; G03B 17/561–17/568; G03B 21/20; G02B 7/00–7/002; F16M 11/02; F16M 11/04; F16M 11/20; F16M 11/40
See application file for complete search history.

(56) **References Cited**

U.S. PATENT DOCUMENTS

3,752,983 A * 8/1973 Yanez ..... G03B 17/48 250/214 LA
5,852,519 A * 12/1998 Do G02B 7/00 359/822
D559,883 S * 1/2008 Nakamura D16/218
D694,802 S * 12/2013 Coyle D16/237
D709,119 S * 7/2014 Kim D16/219
D715,349 S * 10/2014 Boerup D16/237
D732,601 S * 6/2015 Coyle D16/237
D785,073 S * 4/2017 Wang D16/242
D790,000 S * 6/2017 Wang D16/200
2008/0210025 A1* 9/2008 Goossen F16M 11/041 74/5.34
2016/0150134 A1* 5/2016 Katoh G01C 21/18 348/373
2017/0078538 A1* 3/2017 Zhu H04N 5/232
(Continued)

OTHER PUBLICATIONS

DJI Mavic Air Teardown Camera and Gimbal. Online, published date Feb. 13, 2018. Retrieved on Mar. 28, 2018 from URL: https://dronedj.com/2018/02/13/the-mavic-air-a-look-inside-the-latest-dji-drone/dji-mavic-air-teardown-camera-and-gimbal/.*

Primary Examiner — Karen S Acker
Assistant Examiner — Omeed Agilee
(74) *Attorney, Agent, or Firm* — ScienBiziP, P.C.

(57) **CLAIM**

The ornamental design for a camera gimbal, as shown and described.

DESCRIPTION

FIG. **1** is a top front perspective view of a camera gimbal showing our new design;
FIG. **2** is a bottom rear perspective view of a camera gimbal showing our new design;
FIG. **3** is a front elevational view of the camera gimbal of FIG. **1**;
FIG. **4** is a rear elevational view of the camera gimbal of FIG. **1**;
FIG. **5** is a left side elevational view of the camera gimbal of FIG. **1**;
FIG. **6** is a right side elevational view of the camera gimbal of FIG. **1**;
FIG. **7** is a top plan view of the camera gimbal of FIG. **1**; and,
FIG. **8** is a bottom plan view of the camera gimbal of FIG. **1**.

(Continued)

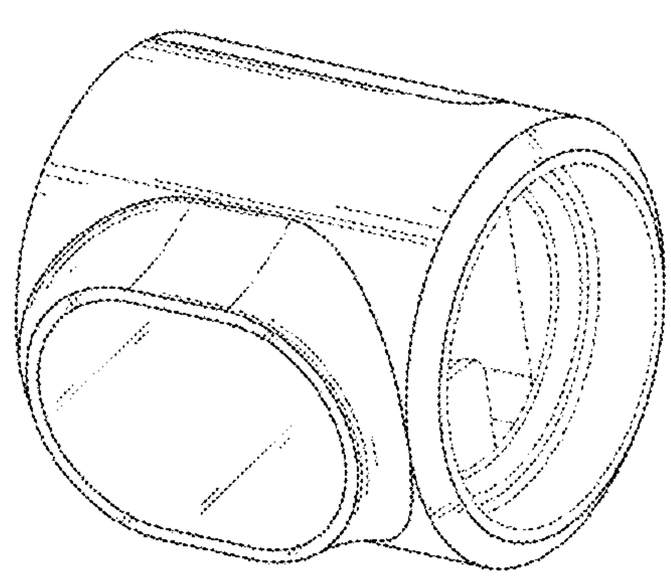

The broken lines and all the areas within the solid line perimeter shown in FIGS. **1**, **2**, **5**, and **6** depict portions of the camera gimbal that form no part of the claimed design.

1 Claim, 8 Drawing Sheets

(56) **References Cited**

U.S. PATENT DOCUMENTS

2017/0108168	A1*	4/2017	Pan	F16M 11/04
2017/0174362	A1*	6/2017	Zhao	F16M 11/041
2017/0336700	A1*	11/2017	Liu	G03B 17/561
2018/0003340	A1*	1/2018	Tian	F16M 13/022

* cited by examiner

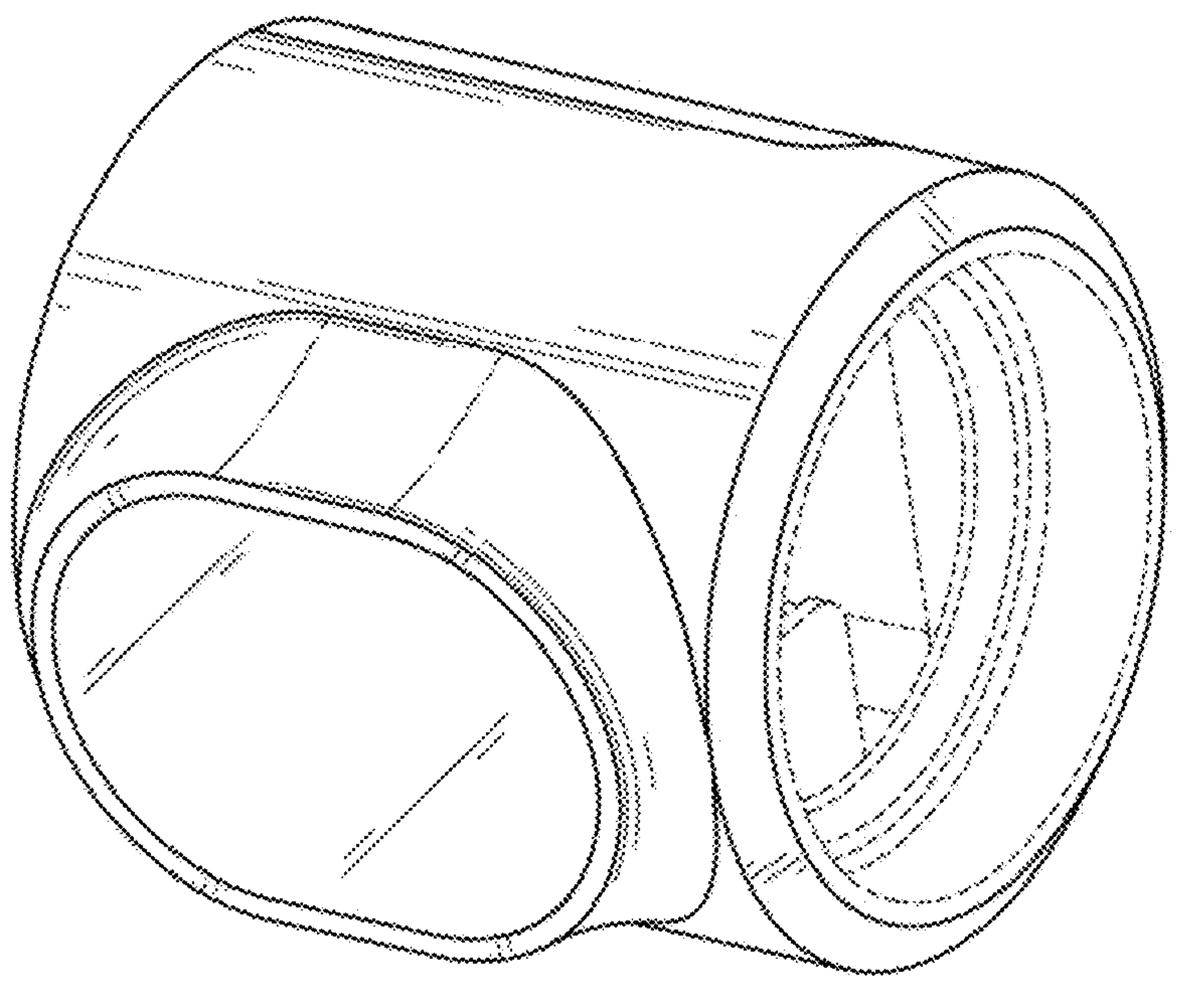

FIG. 1

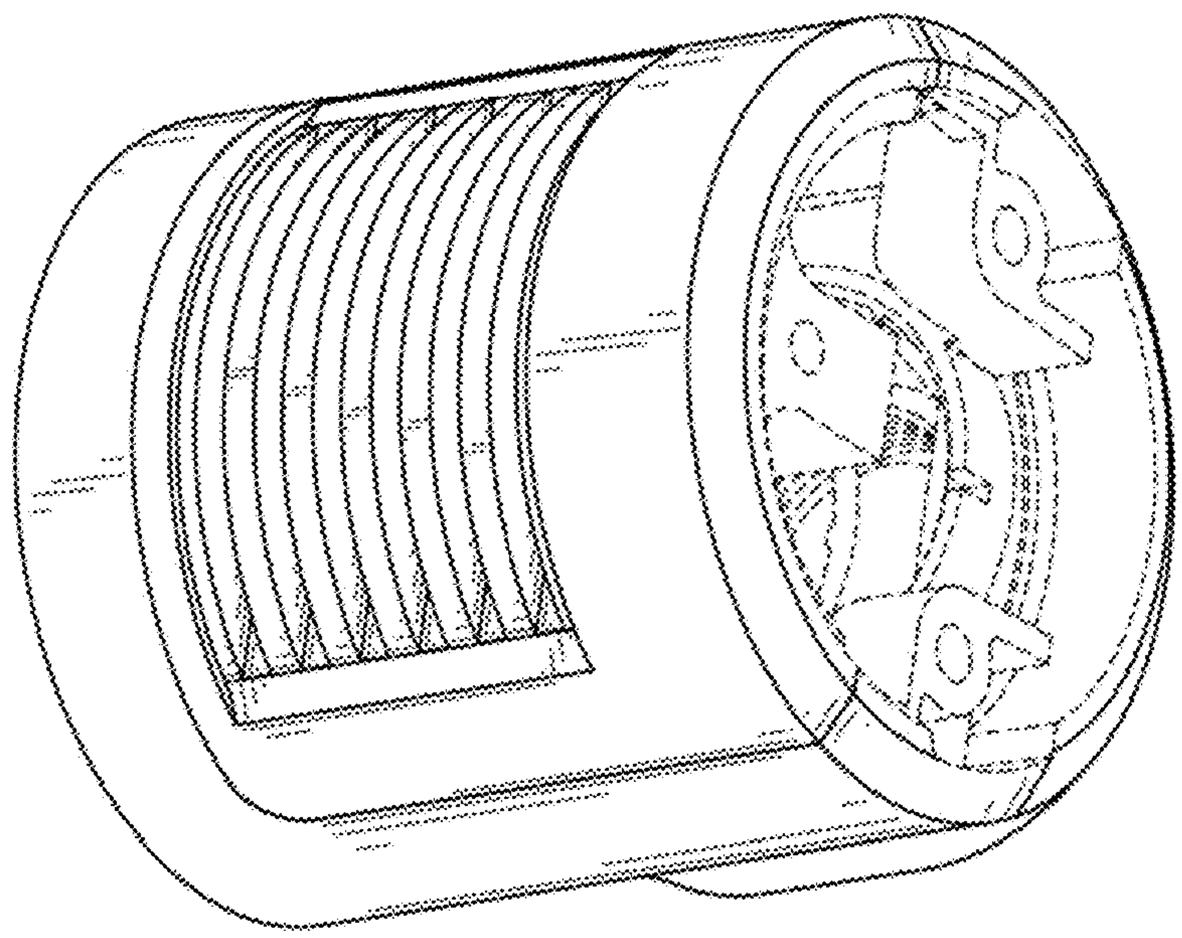

FIG. 2

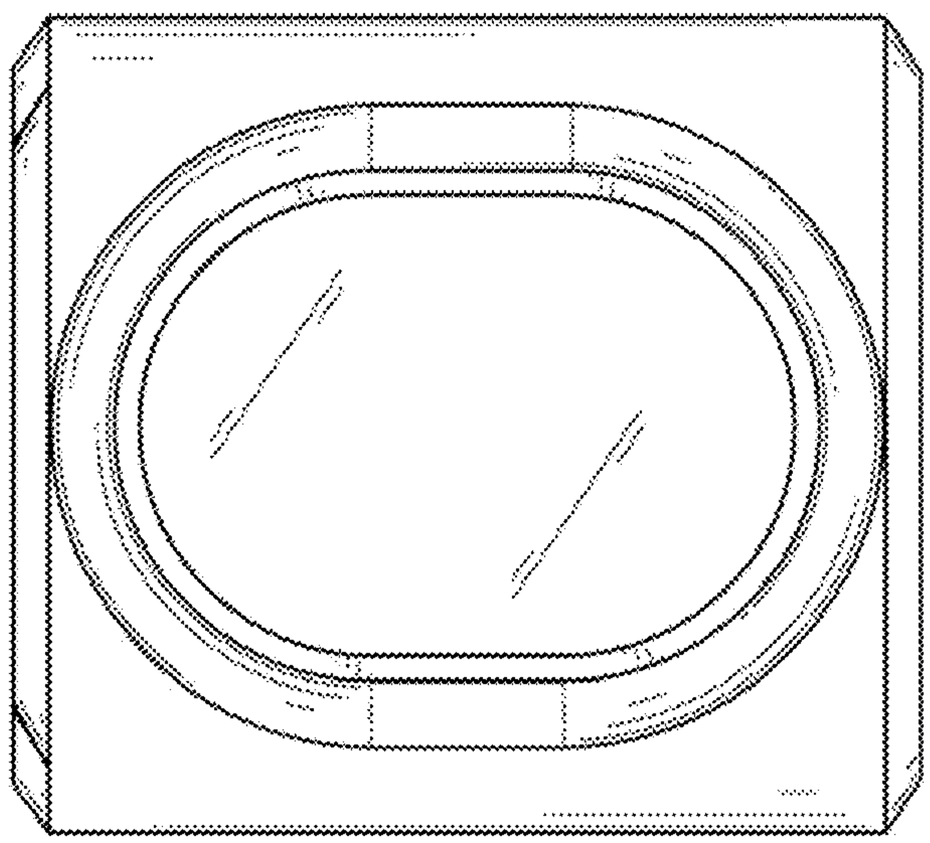

FIG. 3

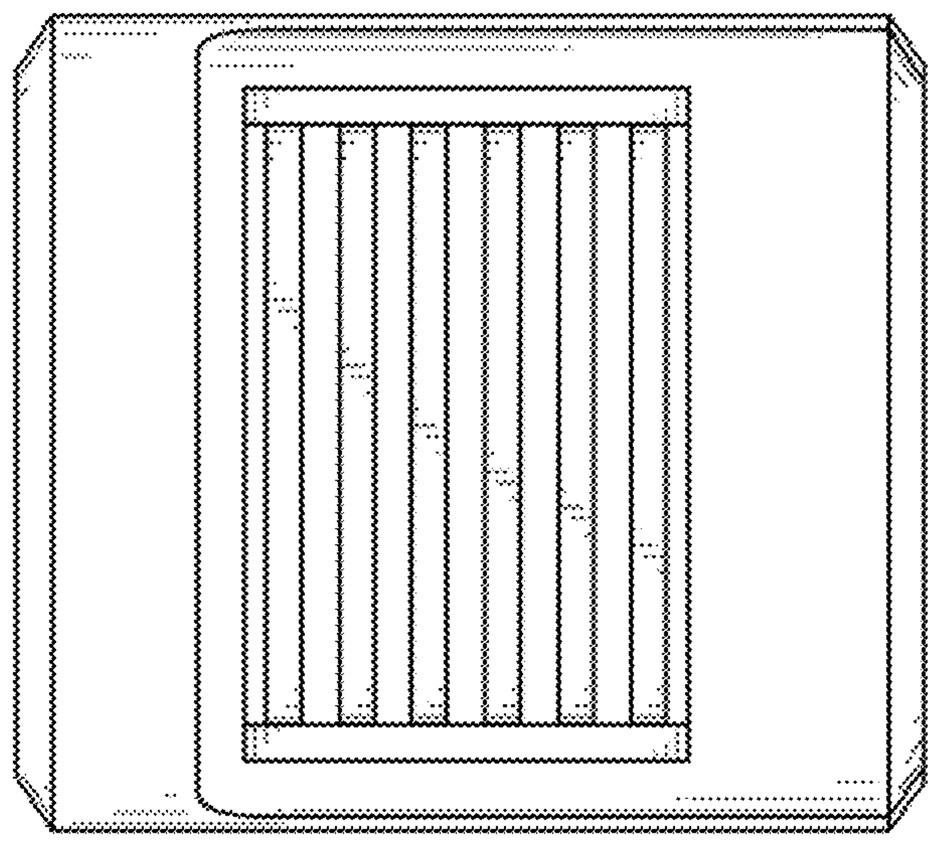

FIG. 4

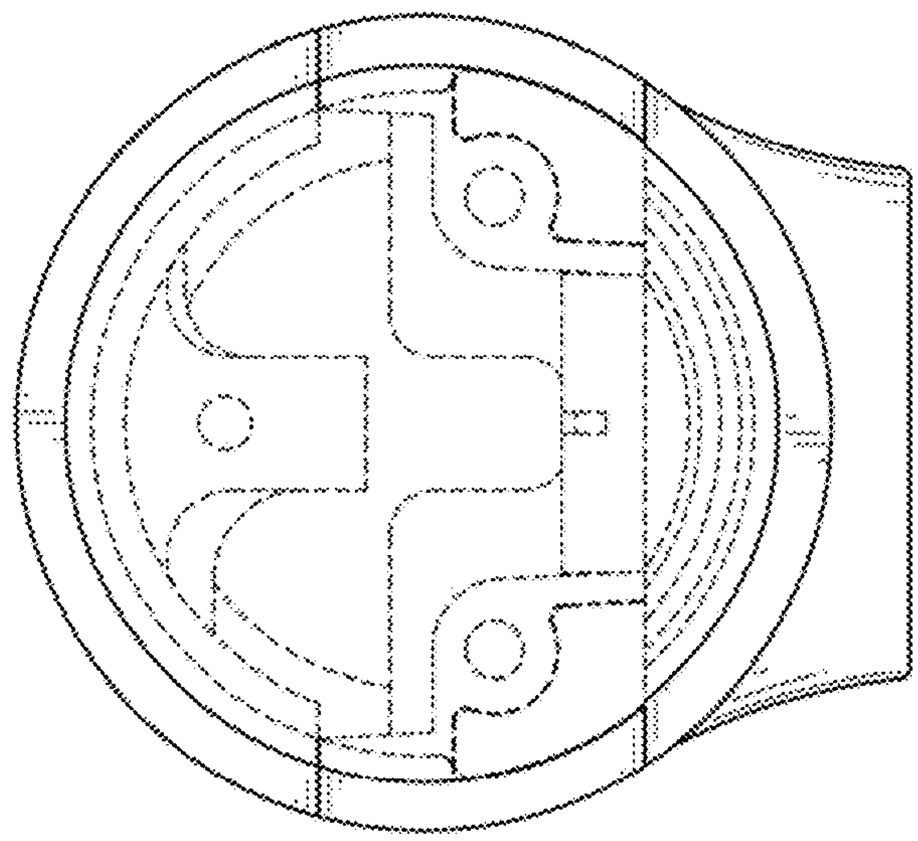

FIG. 5

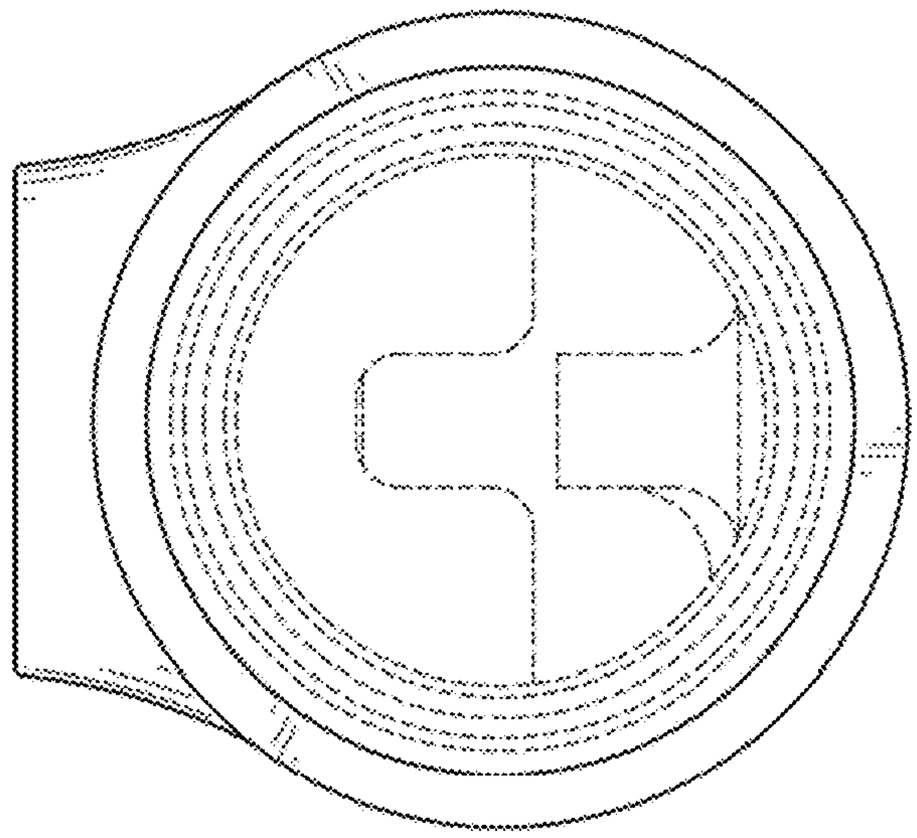

FIG. 6

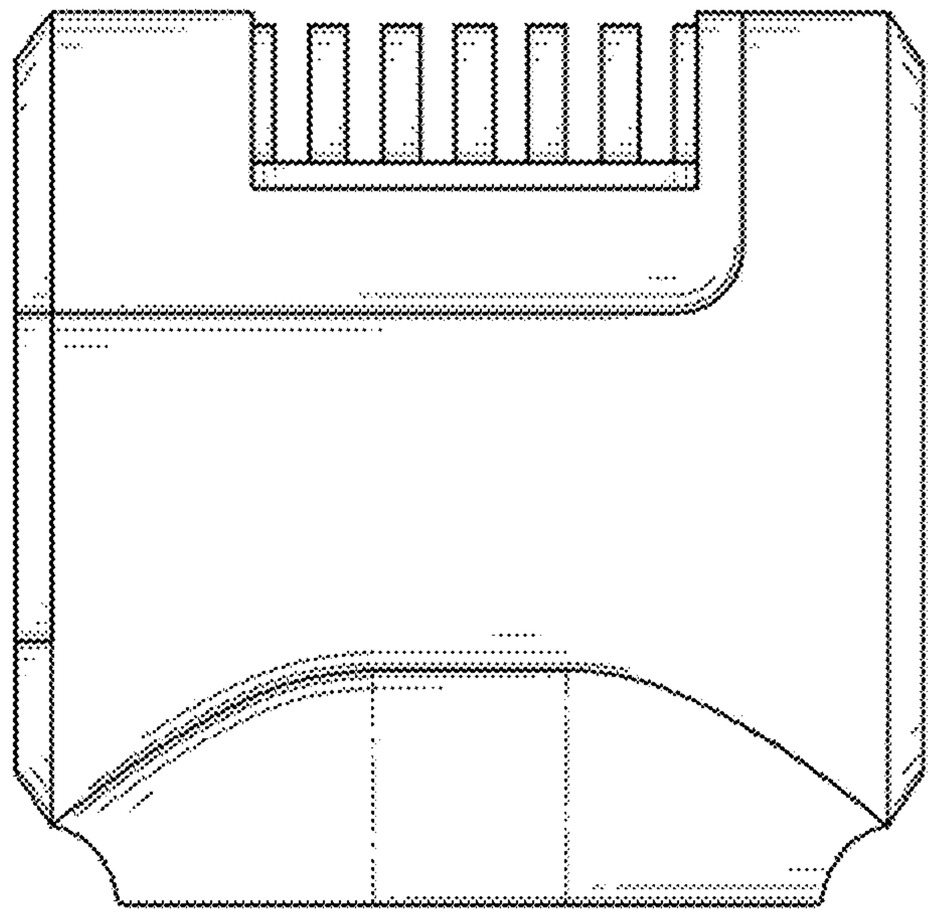

FIG. 7

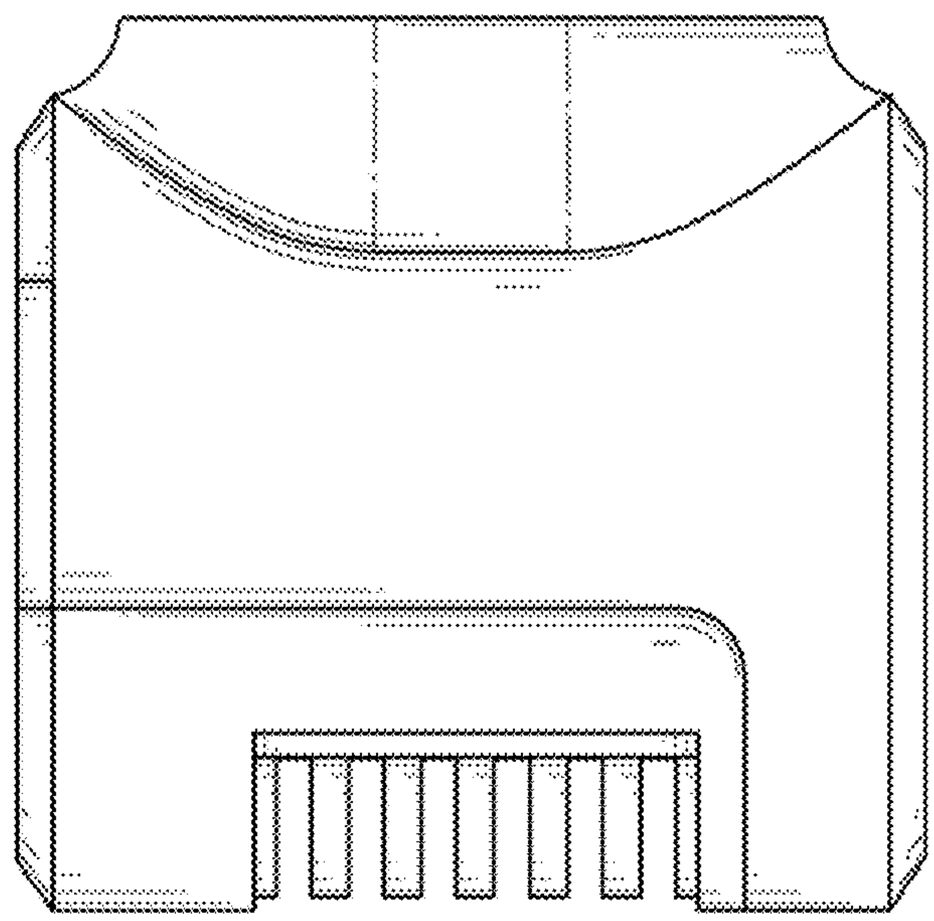

FIG. 8