US00D835058S

(12) United States Design Patent

Kim et al.

(10) Patent No.: US D835,058 S
(45) Date of Patent: ** Dec. 4, 2018

(54) **TELEVISION APPARATUS**

(71) Applicant: **LG ELECTRONICS INC.**, Seoul (KR)

(72) Inventors: **Taeho Kim**, Seoul (KR); **Byungmu Huh**, Seoul (KR)

(73) Assignee: **LG ELECTRONICS INC.**, Seoul (KR)

(**) Term: **15 Years**

(21) Appl. No.: **35/504,067**

(22) Filed: **Jun. 7, 2017**

(80) **Hague Agreement Data**

Int. Filing Date: **Jun. 7, 2017**
Int. Reg. No.: **DM/096467**
Int. Reg. Date: **Jun. 7, 2017**
Int. Reg. Pub. Date: **Dec. 8, 2017**

(30) **Foreign Application Priority Data**

Dec. 12, 2016 (KR) 30-2016-0060010

(51) **LOC (11) Cl.** **14-03**
(52) **U.S. Cl.**
USPC **D14/126**
(58) **Field of Classification Search**
USPC D14/125–134, 239, 314–316, 322, 326, D14/334–336, 339–341, 371, 373–374, D14/448, 450; D21/329, 332, 515; D6/300, 310, 314, 320, 322, 553
CPC G06F 1/16; G06F 1/1601; G06F 1/1637; H04N 5/64; H05K 5/0204; H05K 5/0017; H05K 5/0217
See application file for complete search history.

(56) **References Cited**

U.S. PATENT DOCUMENTS

D703,168 S * 4/2014 Won D14/126
D703,169 S * 4/2014 Kim D14/126
D708,157 S * 7/2014 Park D14/126
D729,755 S * 5/2015 McManigal D14/126
D741,273 S * 10/2015 Huh D14/126
D741,275 S * 10/2015 Huh D14/126
D748,596 S * 2/2016 McManigal D14/126
D749,532 S * 2/2016 McManigal D14/126
D751,048 S * 3/2016 Yoon D14/126
D751,519 S * 3/2016 Ma D14/126

(Continued)

FOREIGN PATENT DOCUMENTS

CN 303579179 * 2/2016

OTHER PUBLICATIONS

LG 28LJ430B-PU, no date available, [online], [site visited Sep. 14, 2018]. Retrieved from url:https://www.lg.com/us/tvs/lg-28LJ430B-PU-led-tv (Year: 2018).*

(Continued)

Primary Examiner — Jeffrey D Asch
Assistant Examiner — Tracey J Bell
(74) *Attorney, Agent, or Firm* — Birch, Stewart, Kolasch & Birch, LLP

(57) **CLAIM**

The ornamental design for a television apparatus, as shown and described.

DESCRIPTION

1. Television apparatus
1.1 : Perspective
1.2 : Front
1.3 : Back
1.4 : Left
1.5 : Right
1.6 : Top
1.7 : Bottom
The broken lines indicate portions of the article that form no part of the claimed design.

1 Claim, 7 Drawing Sheets

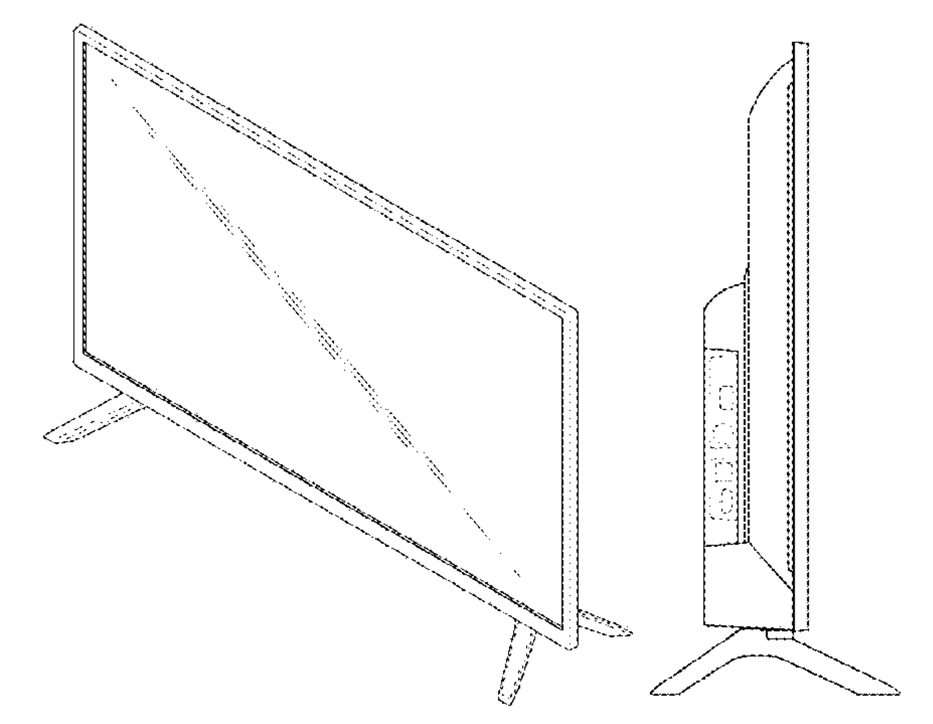

(56) **References Cited**

U.S. PATENT DOCUMENTS

D782,433	S	*	3/2017	Lee	D14/126
D782,991	S	*	4/2017	Kim	D14/126
D785,581	S	*	5/2017	McManigal	D14/126
D788,750	S	*	6/2017	Choi	D14/239
D796,464	S	*	9/2017	Kim	D14/126
D805,490	S	*	12/2017	Lim	D14/126
D806,661	S	*	1/2018	Lee	D14/126
D806,667	S	*	1/2018	Lee	D14/126
D819,584	S	*	6/2018	Won	D14/126
D819,586	S	*	6/2018	Ryu	D14/126
D819,588	S	*	6/2018	Ryu	D14/126
D820,228	S	*	6/2018	Kim	D14/126
D821,370	S	*	6/2018	Kim	D14/239
D826,791	S	*	8/2018	Kim	D12/126
2017/0155869	A1	*	6/2017	Ikemoto	H04N 5/64

OTHER PUBLICATIONS

Sharp P5000 Series, no date available, [online], [site visited Sep. 14, 2018]. Retrieved from url:https://www.bhphotovideo.com/c/product/1348417-REG/sharp_lc_43p5000u_aquos_43_1080p_smart.html (Year: 2018).*

Insignia 32, no date available, [online], [site visited Sep. 14, 2018]. Retrieved from url:https://www.bestbuy.com/site/insignia-32-class-led-720p-smart-roku-tv/4822001.p?skuId=4822001 (Year: 2018).*

* cited by examiner

1.1

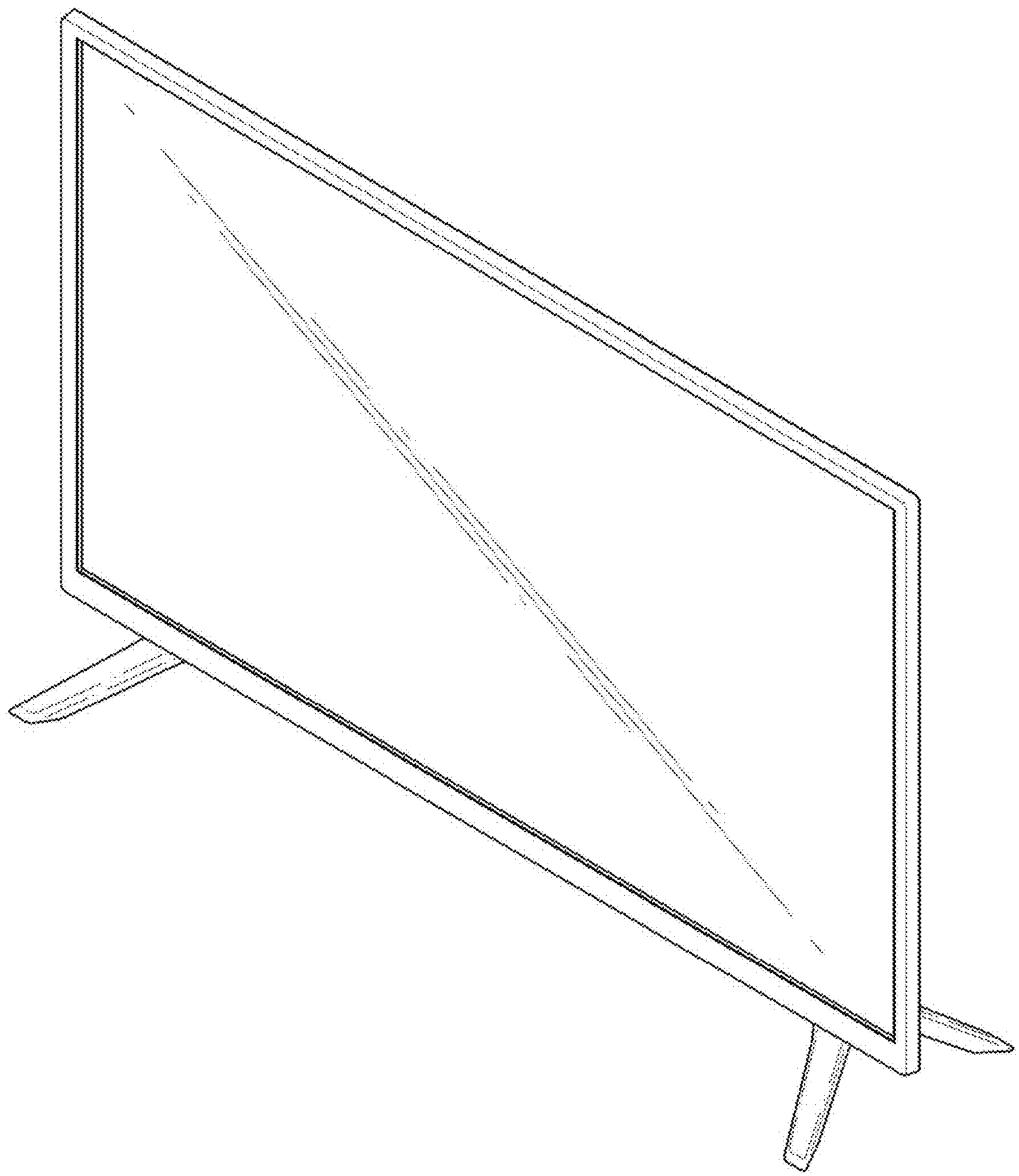

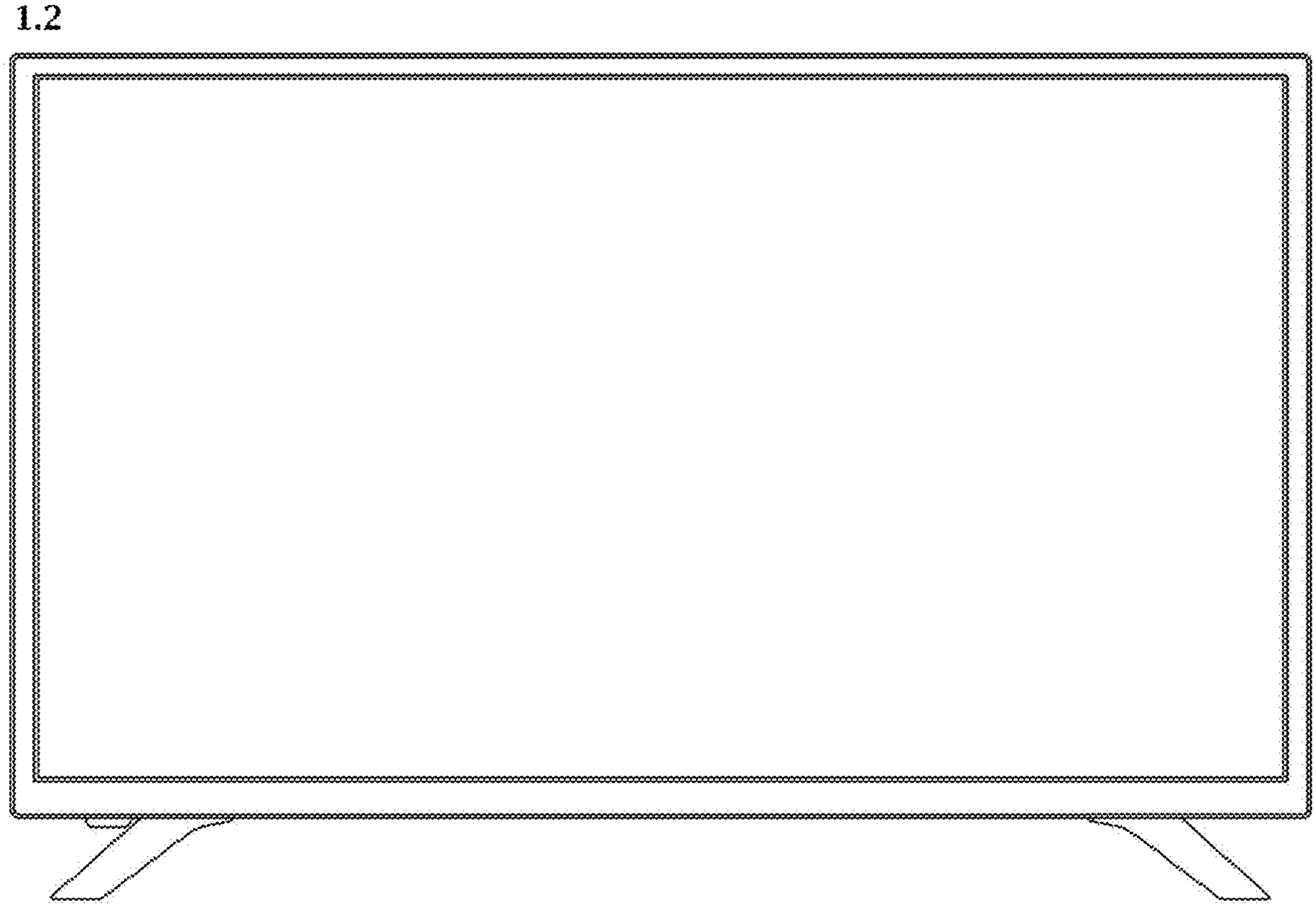
1.2

1.3

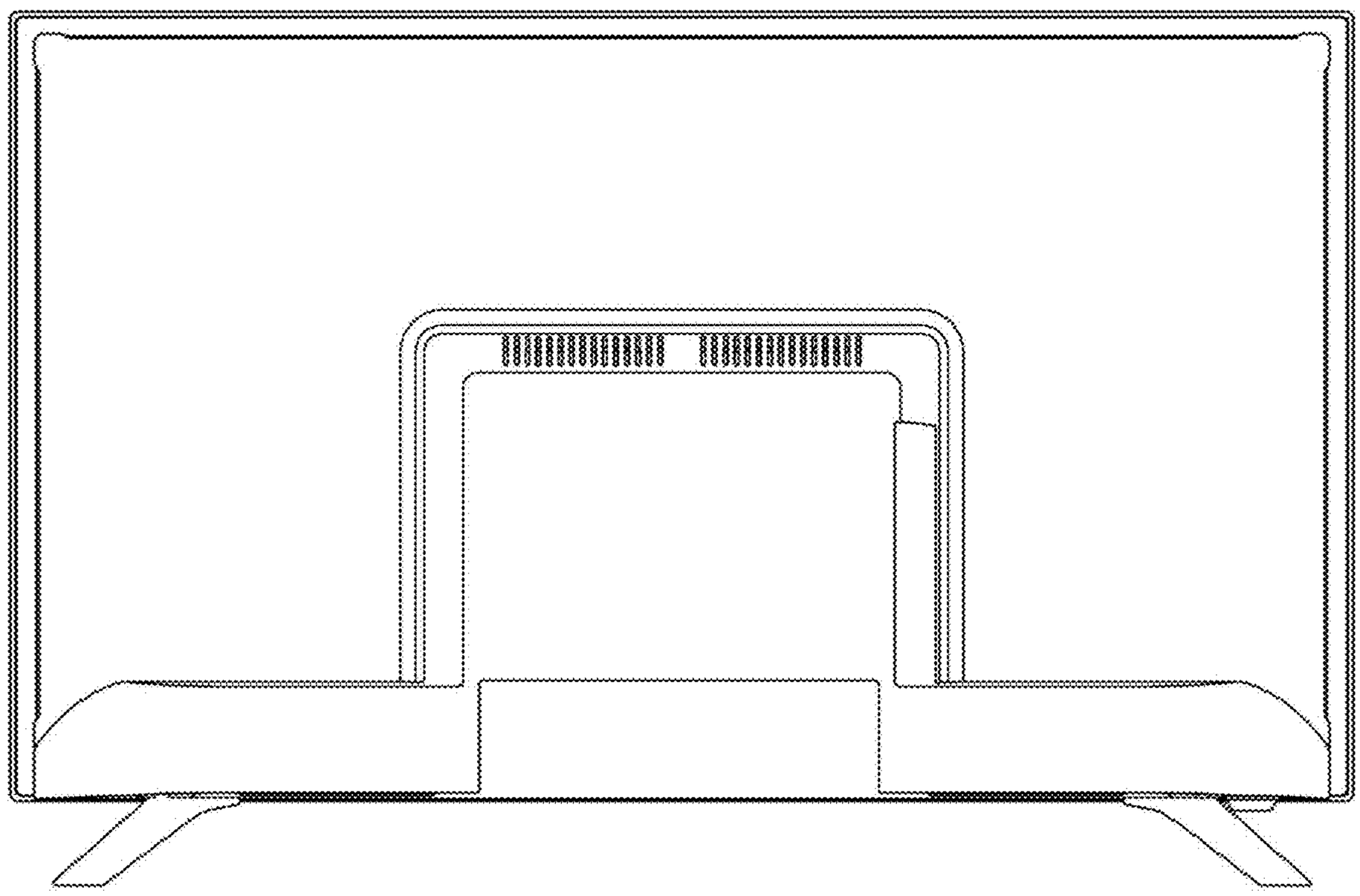

1.4

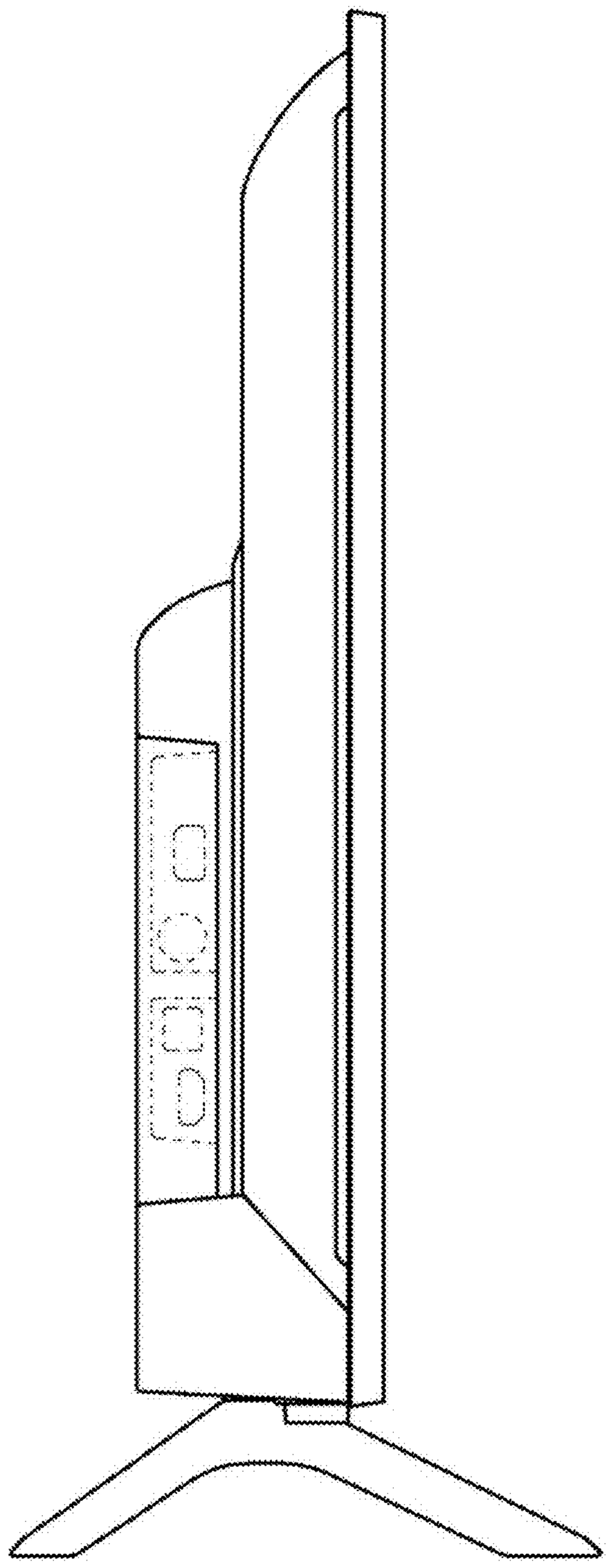

1.5

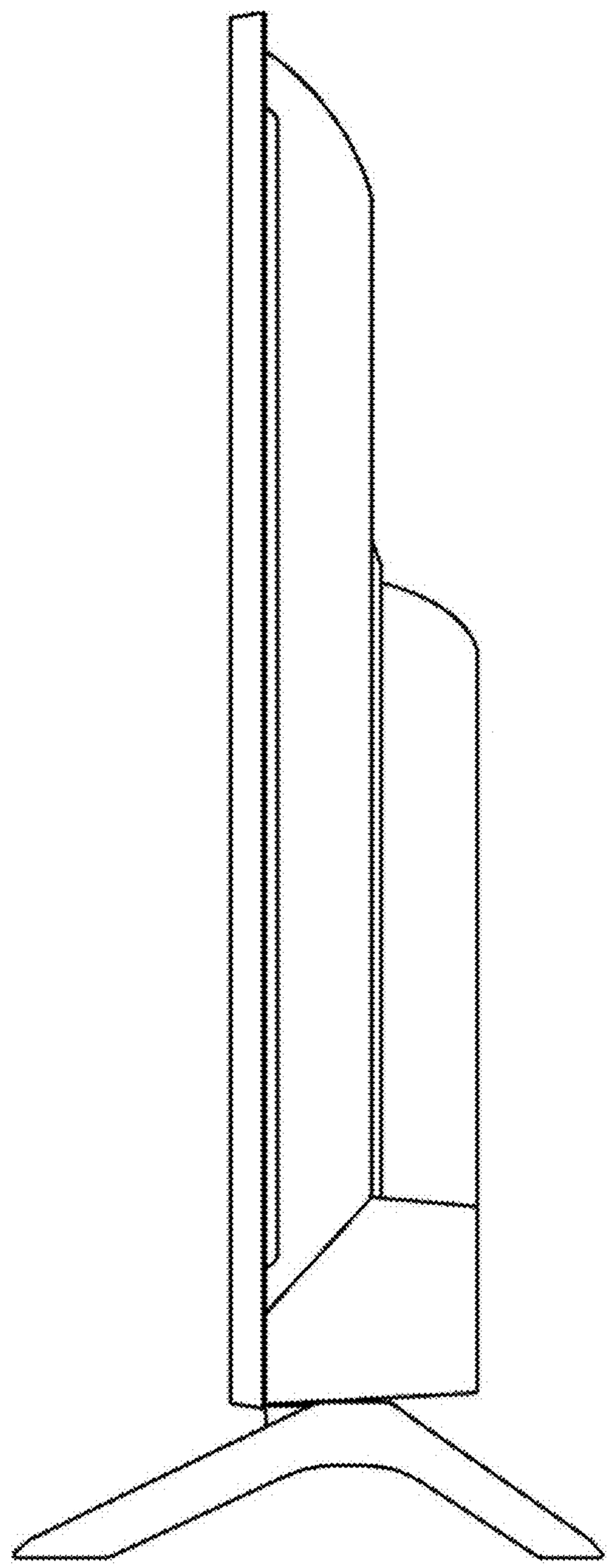

1.6

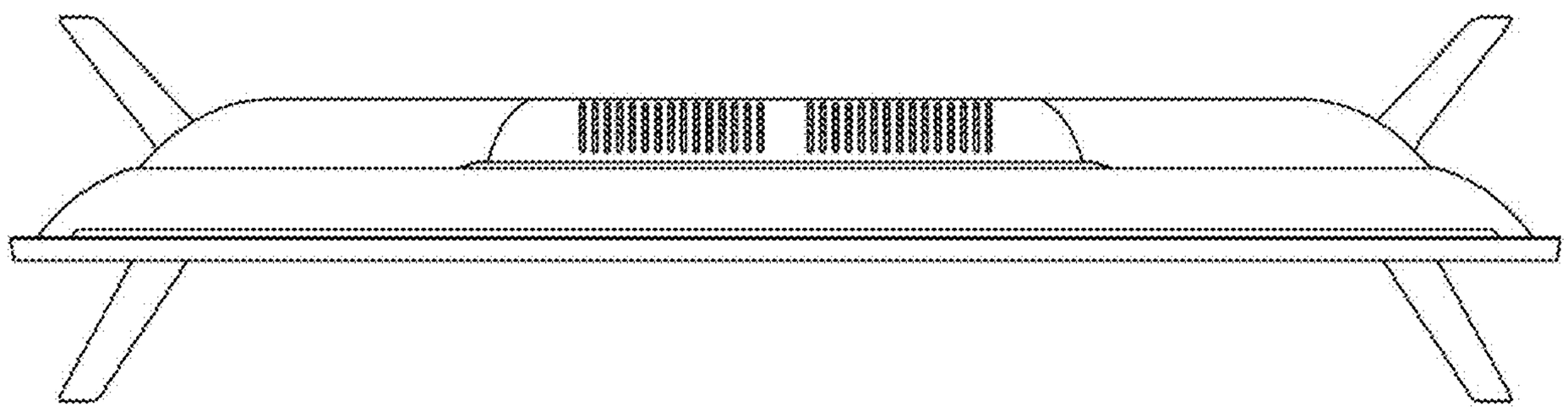
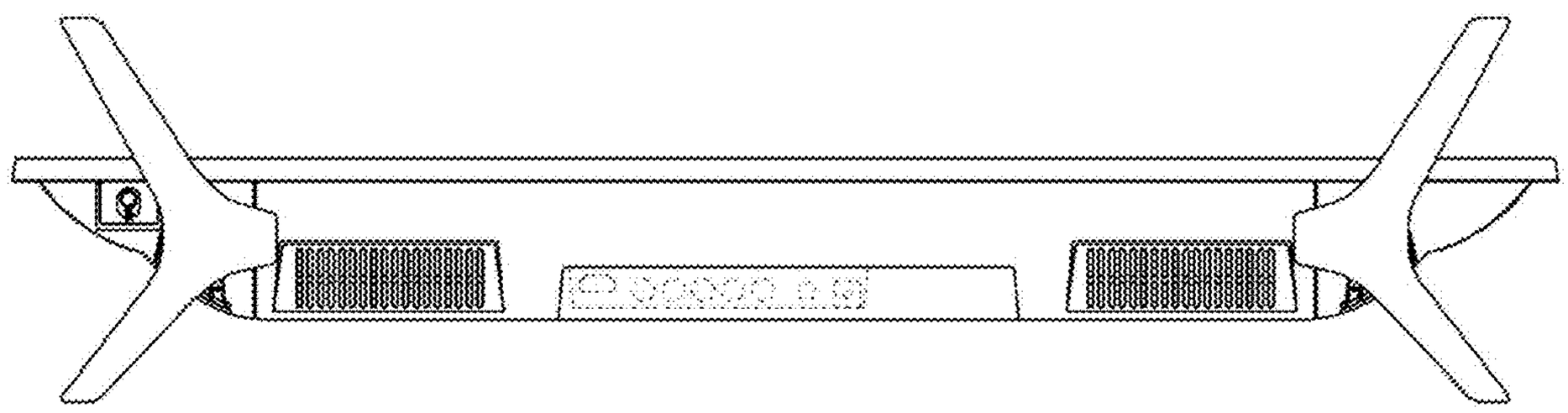
1.7