US00D834523S

(12) United States Design Patent

Bingham

(10) Patent No.: US D834,523 S
(45) Date of Patent: ** Nov. 27, 2018

(54) **CONNECTOR**

(71) Applicant: **Molex, LLC**, Lisle, IL (US)

(72) Inventor: **John Bingham**, Plaintfield, IL (US)

(73) Assignee: **Molex, LLC**, Lisle, IL (US)

(**) Term: **15 Years**

(21) Appl. No.: **29/593,998**

(22) Filed: **Feb. 14, 2017**

(51) **LOC (11) Cl.** **13-03**

(52) **U.S. Cl.**
USPC **D13/147**

(58) **Field of Classification Search**
USPC D13/110, 118, 120, 123, 133, 145–147, D13/149, 154, 156, 173, 184, 199
CPC H01R 12/00; H01R 12/51; H01R 12/70; H01R 12/72; H01R 13/00; H01R 13/15; H01R 13/62; H01R 13/627; H01R 13/639; H01R 13/64; H01R 13/65; H01R 24/60; H01R 43/16; H01R 9/00; H01R 9/03; H01R 13/52; H01R 13/6581; H01R 13/6583; H01R 13/6585; H01R 24/00; H01R 24/20; H05K 7/14
See application file for complete search history.

(56) **References Cited**

U.S. PATENT DOCUMENTS

D412,700	S	*	8/1999	Gardner	D13/147
D451,885	S	*	12/2001	Hisatomi	D13/147
6,716,068	B2	*	4/2004	Wu	H01R 12/7029 439/633
D489,687	S	*	5/2004	Kawase	D13/147
D561,696	S		2/2008	Chen et al.	
D576,556	S		9/2008	Lee et al.	
D602,870	S	*	10/2009	Wu	D13/147
D641,705	S		7/2011	Sato et al.	
D678,209	S	*	3/2013	Kondo	D13/147
D678,843	S		3/2013	Faith	
D689,438	S	*	9/2013	Yu	D13/147
D689,439	S	*	9/2013	Yu	D13/147
D690,655	S	*	10/2013	Fu	D13/147
D691,564	S		10/2013	Honda	
D696,200	S	*	12/2013	Kobuchi	D13/147
D703,143	S	*	4/2014	Yamaguchi	D13/147
D726,119	S	*	4/2015	Yamaguchi	D13/147
D726,120	S		4/2015	Hou et al.	
D733,657	S	*	7/2015	Yuan	D13/147
D733,659	S	*	7/2015	Zhu	D13/147
D751,989	S		3/2016	Imai	
D764,415	S		8/2016	Qian et al.	
D775,084	S		12/2016	Sato et al.	
D780,124	S		2/2017	Qian et al.	

(Continued)

OTHER PUBLICATIONS

Molex Receptacle Assembly Speedstack Connector, Apr. 24, 2013, Lisle, Illinois, USA (8 Pages).

Primary Examiner — Angela J Lee
Assistant Examiner — Shawn T Gingrich
(74) *Attorney, Agent, or Firm* — Banner & Witcoff, Ltd.

(57) **CLAIM**

The ornamental design for a connector, as shown and described.

DESCRIPTION

FIG. **1** is a front top perspective view of a connector showing my new design;
FIG. **2** is a bottom front perspective view thereof;
FIG. **3** is a front view thereof;
FIG. **4** is a rear view thereof;
FIG. **5** is a top view thereof;
FIG. **6** is a bottom view thereof;
FIG. **7** is a right side view thereof; and,
FIG. **8** is a left side view thereof.
The broken lines depicting the remainder of the connector show features that form no part of the claimed design.

1 Claim, 8 Drawing Sheets

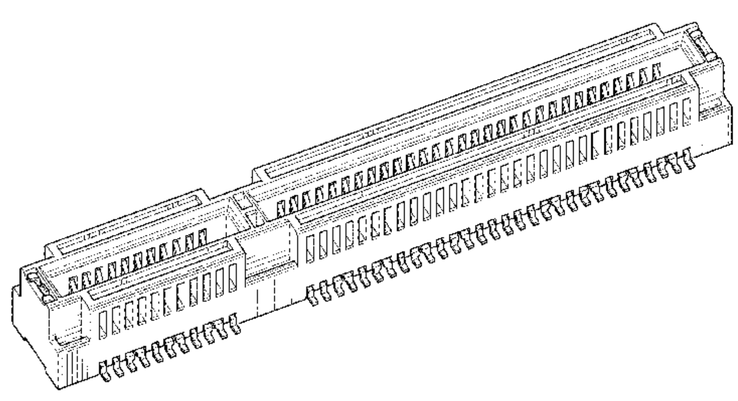

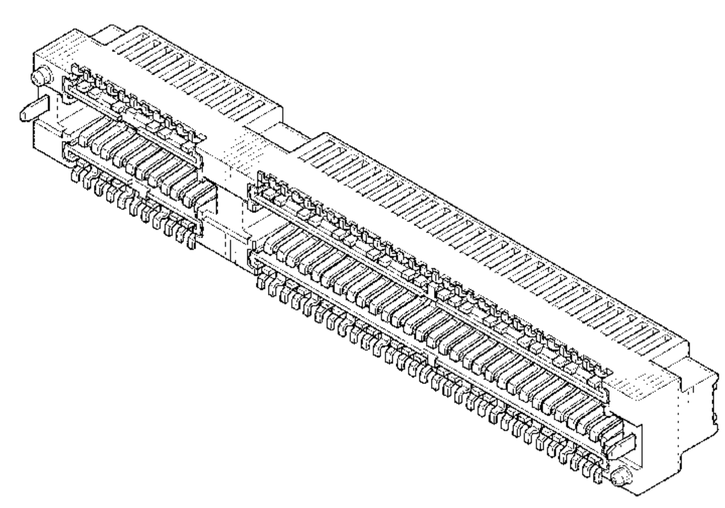

(56) **References Cited**

U.S. PATENT DOCUMENTS

D798,239	S	9/2017	Ashibu	
9,985,370	B2 *	5/2018	Asanuma	H01R 12/774
D827,581	S *	9/2018	Ho	D13/147
2003/0224654	A1 *	12/2003	Wu	H01R 12/7047 439/573
2008/0207058	A1 *	8/2008	Zhu	H01R 13/6456 439/633
2011/0086552	A1 *	4/2011	Yao	H01R 13/506 439/633
2012/0094542	A1 *	4/2012	Duenas	H01R 13/6471 439/630
2012/0135618	A1 *	5/2012	Shen	H01R 12/721 439/152
2016/0190746	A1 *	6/2016	Goh	H01R 13/6471 439/626
2017/0201052	A1	7/2017	Peng et al.	
2017/0207565	A1	7/2017	Guo et al.	
2017/0346238	A1	11/2017	Ju et al.	
2017/0365951	A1	12/2017	Zhang et al.	
2017/0373408	A1	12/2017	Cheng et al.	
2017/0373439	A1	12/2017	Wen et al.	
2017/0373441	A1	12/2017	Zhao et al.	

* cited by examiner

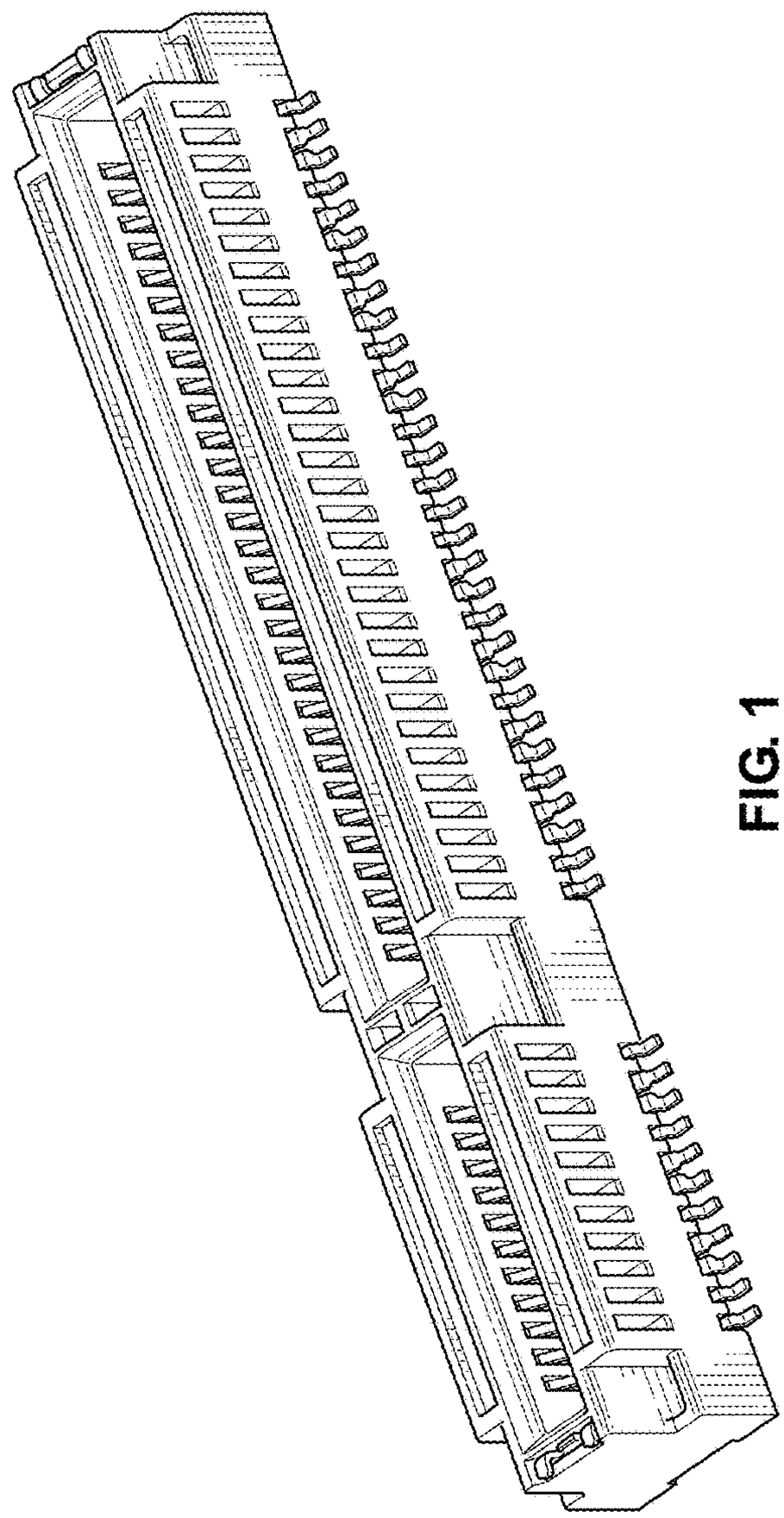

FIG. 1

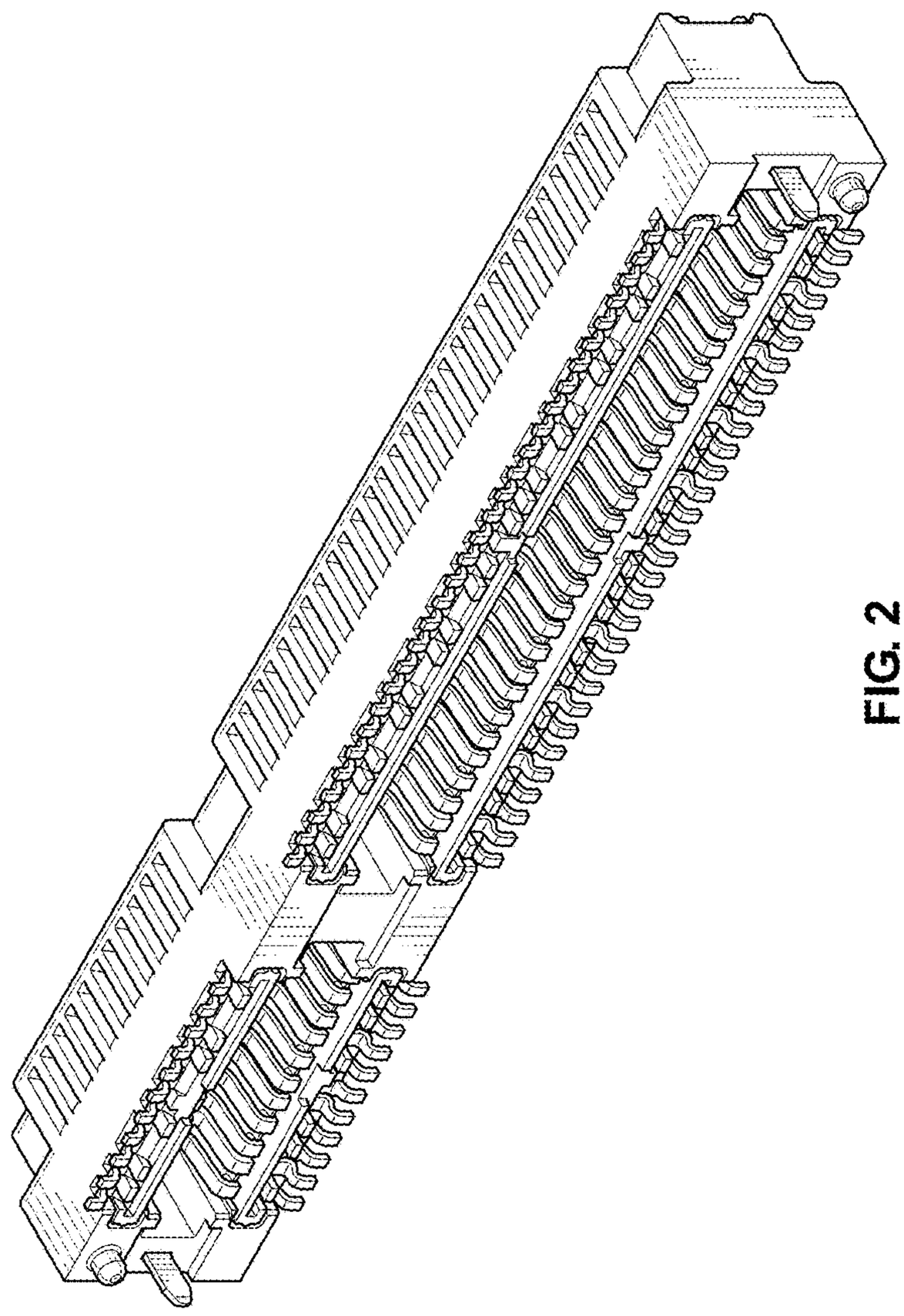

FIG. 2

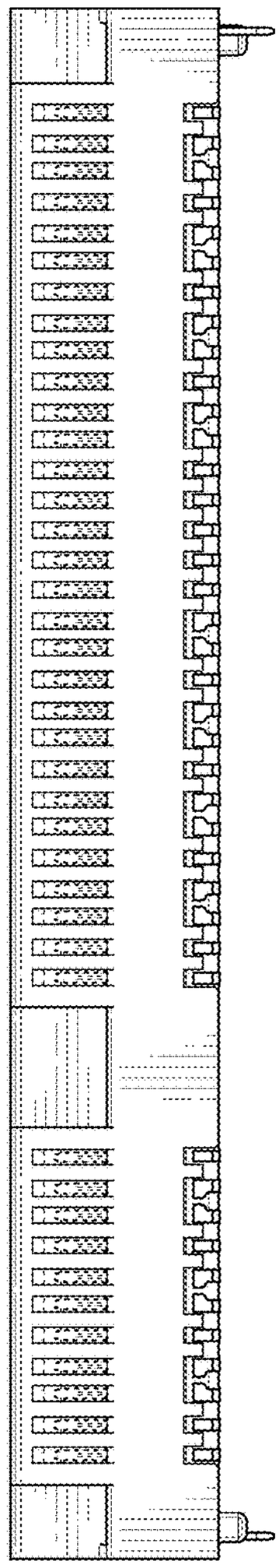

FIG. 3

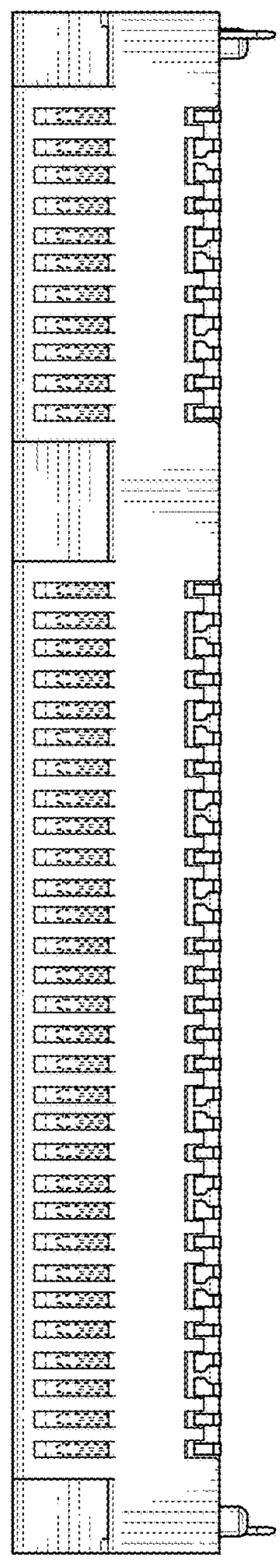

FIG. 4

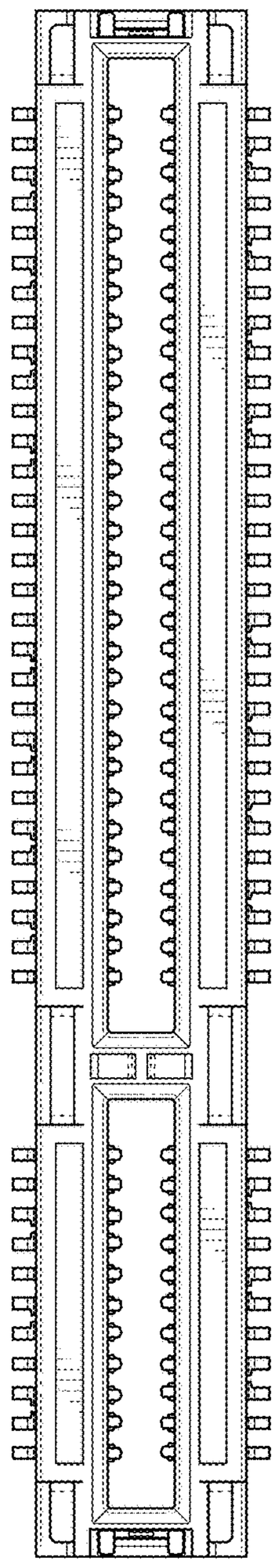

FIG. 5

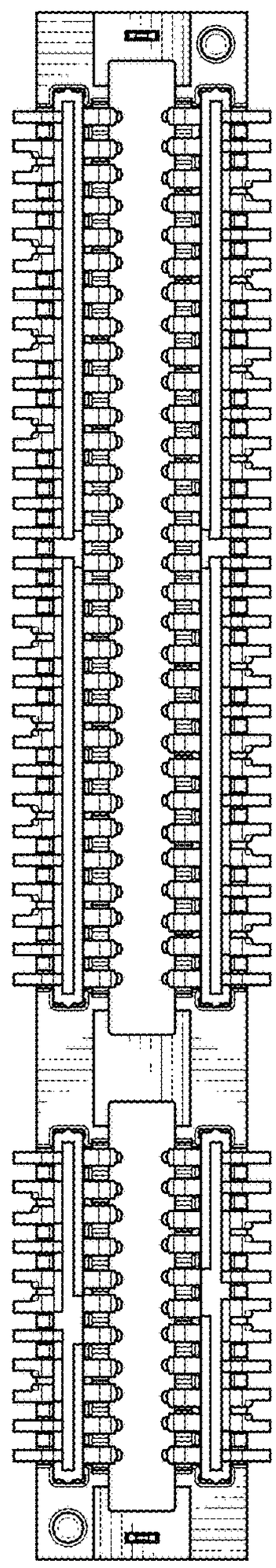

FIG. 6

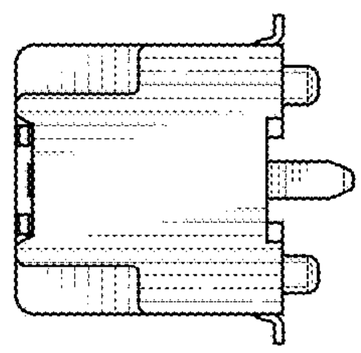

FIG. 7

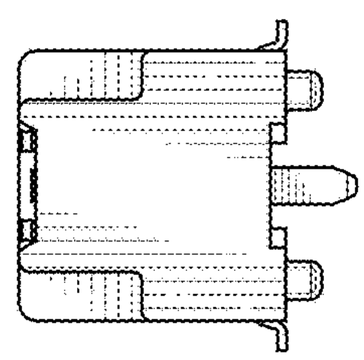

FIG. 8