US00D834028S

(12) United States Design Patent

Wu

(10) Patent No.: US D834,028 S
(45) Date of Patent: ** Nov. 20, 2018

(54) **ELEVATED COMPUTER STAND**

(71) Applicant: **Youyou Wu**, Arcadia, CA (US)

(72) Inventor: **Youyou Wu**, Arcadia, CA (US)

(**) Term: **15 Years**

(21) Appl. No.: **29/618,367**

(22) Filed: **Sep. 20, 2017**

(51) **LOC (11) Cl.** **08-07**

(52) **U.S. Cl.**
USPC **D14/447**

(58) **Field of Classification Search**
USPC D14/447, 432, 434, 439, 440, 451, 452, D14/457, 239; D8/363, 373, 380; D6/406.3, 406.4, 406.5, 406.6; D12/415; D13/108, 144
See application file for complete search history.

(56) **References Cited**

U.S. PATENT DOCUMENTS

D559,850	S		1/2008	Lye	
D589,964	S	*	4/2009	Heggland	D14/434
D591,303	S	*	4/2009	Heggland	D14/434
D619,139	S	*	7/2010	Ho	D14/447
D687,441	S	*	8/2013	Janzen	D14/447
D687,832	S	*	8/2013	Edwards	D14/447
D703,677	S	*	4/2014	Bigazzi	D14/447
D707,230	S	*	6/2014	Castronovo	D14/447
D726,733	S	*	4/2015	Specht	D14/447
D769,247	S	*	10/2016	Heyen	D14/447
D788,781	S	*	6/2017	Chen	D14/447
D798,874	S	*	10/2017	Klabukov	D14/447
D804,490	S	*	12/2017	Wei	D14/447
D824,915	S	*	8/2018	Hsu	D14/447

* cited by examiner

Primary Examiner — Angela J Lee
(74) *Attorney, Agent, or Firm* — QuickPatents, LLC; Kevin Prince

(57) **CLAIM**

I claim the ornamental design for a elevated computer stand, as shown and described.

DESCRIPTION

FIG. **1** is a rear perspective view of a elevated computer stand, showing my new design;
FIG. **2** is a front perspective view thereof;
FIG. **3** is a front elevational view thereof;
FIG. **4** is a rear elevational view thereof;
FIG. **5** is a left-side elevational view thereof;
FIG. **6** is a right-side elevational view thereof;
FIG. **7** is a top plan view thereof; and,
FIG. **8** is a bottom plan view thereof.
The broken lines showing a computer in FIG. **1** depict environmental matter and form no part of the claimed design.

1 Claim, 6 Drawing Sheets

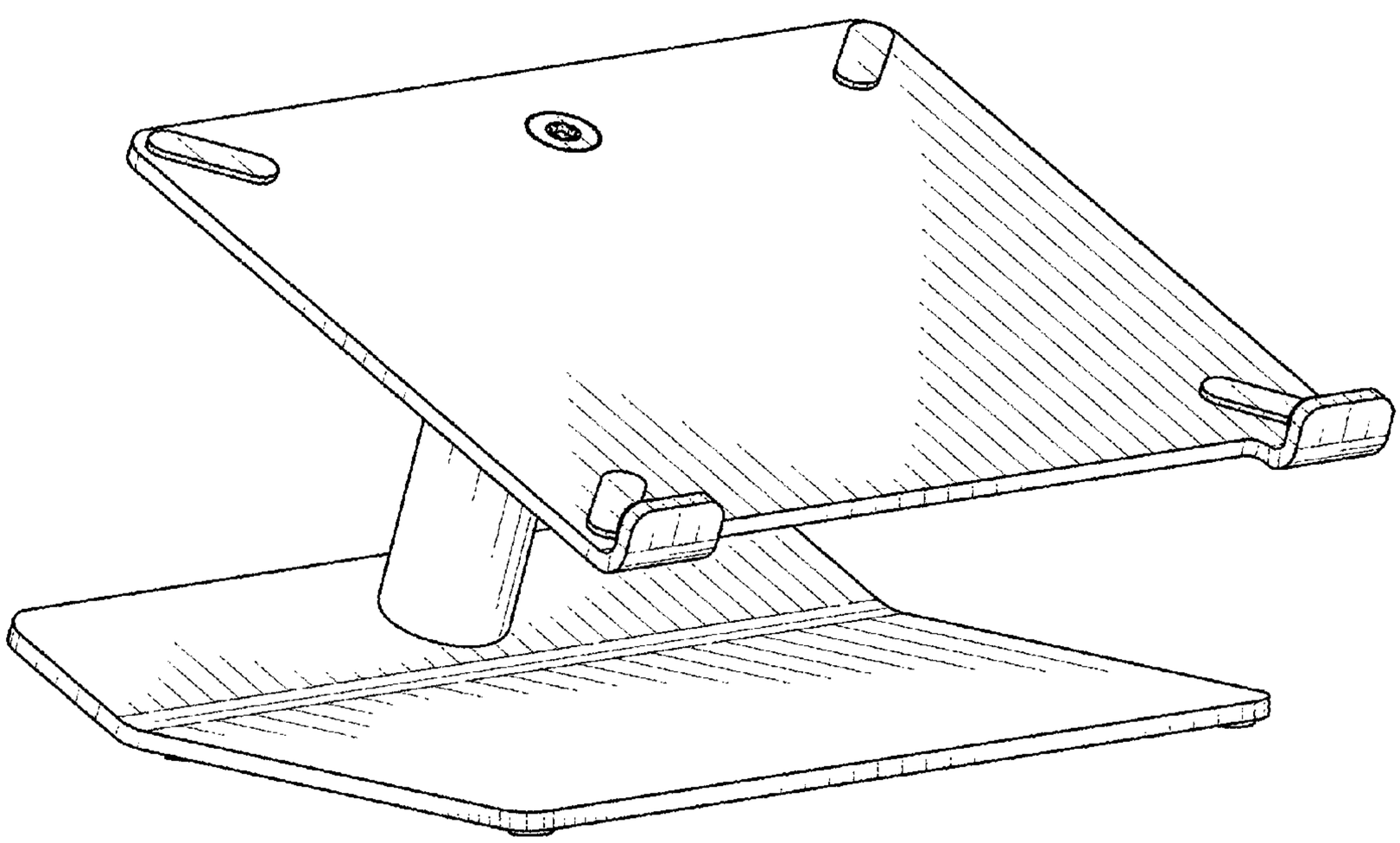

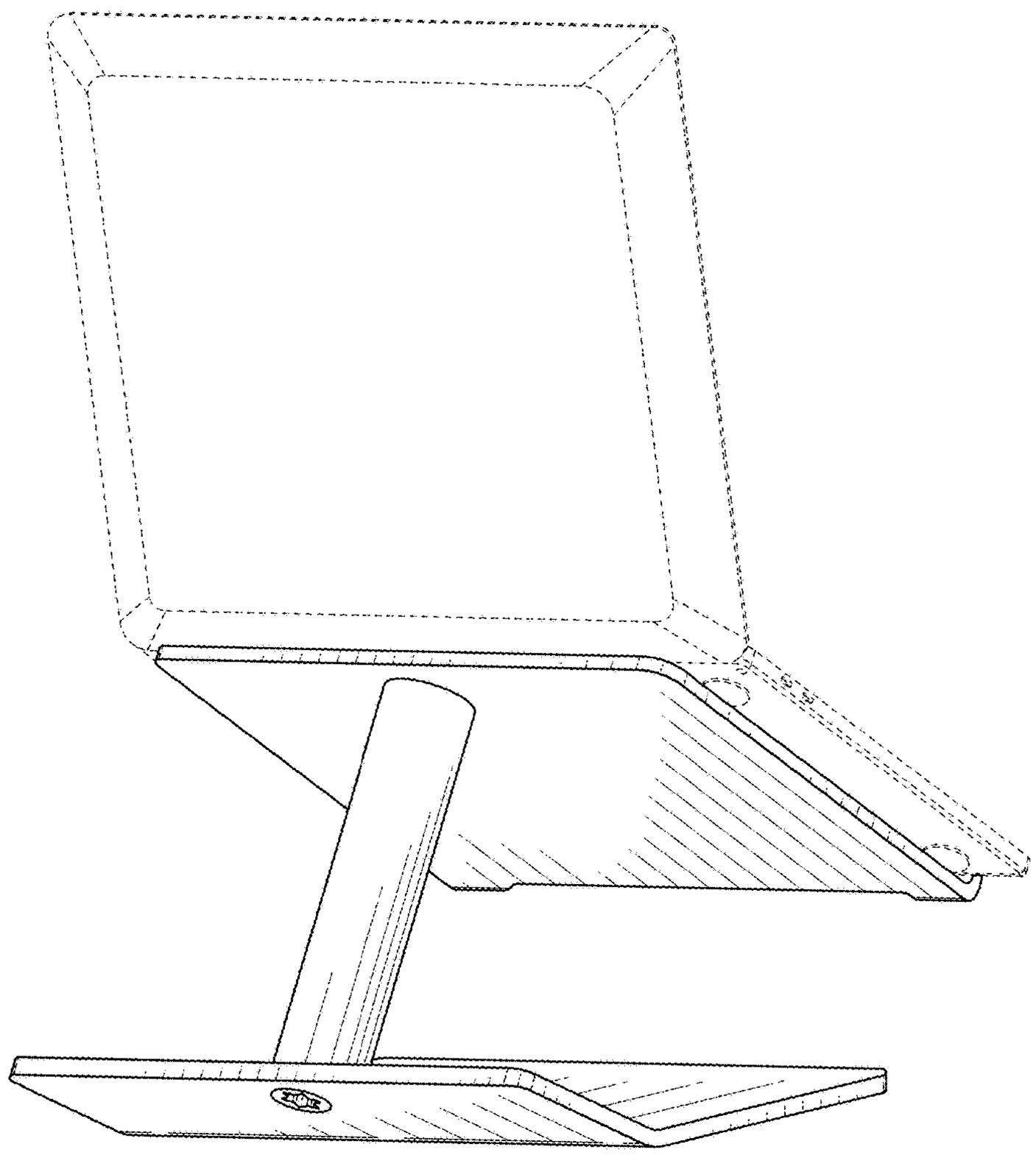

FIG. 1

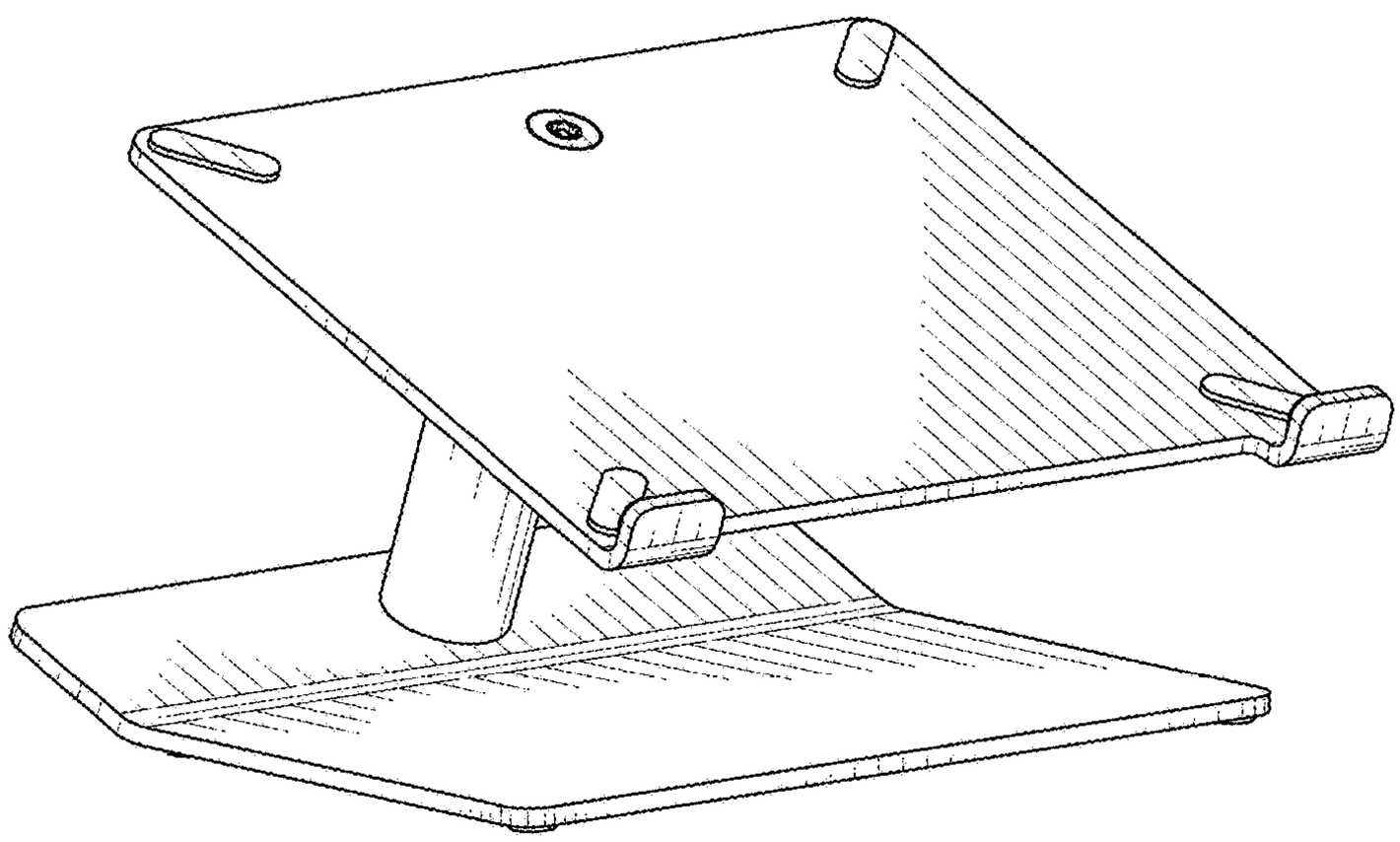

FIG. 2

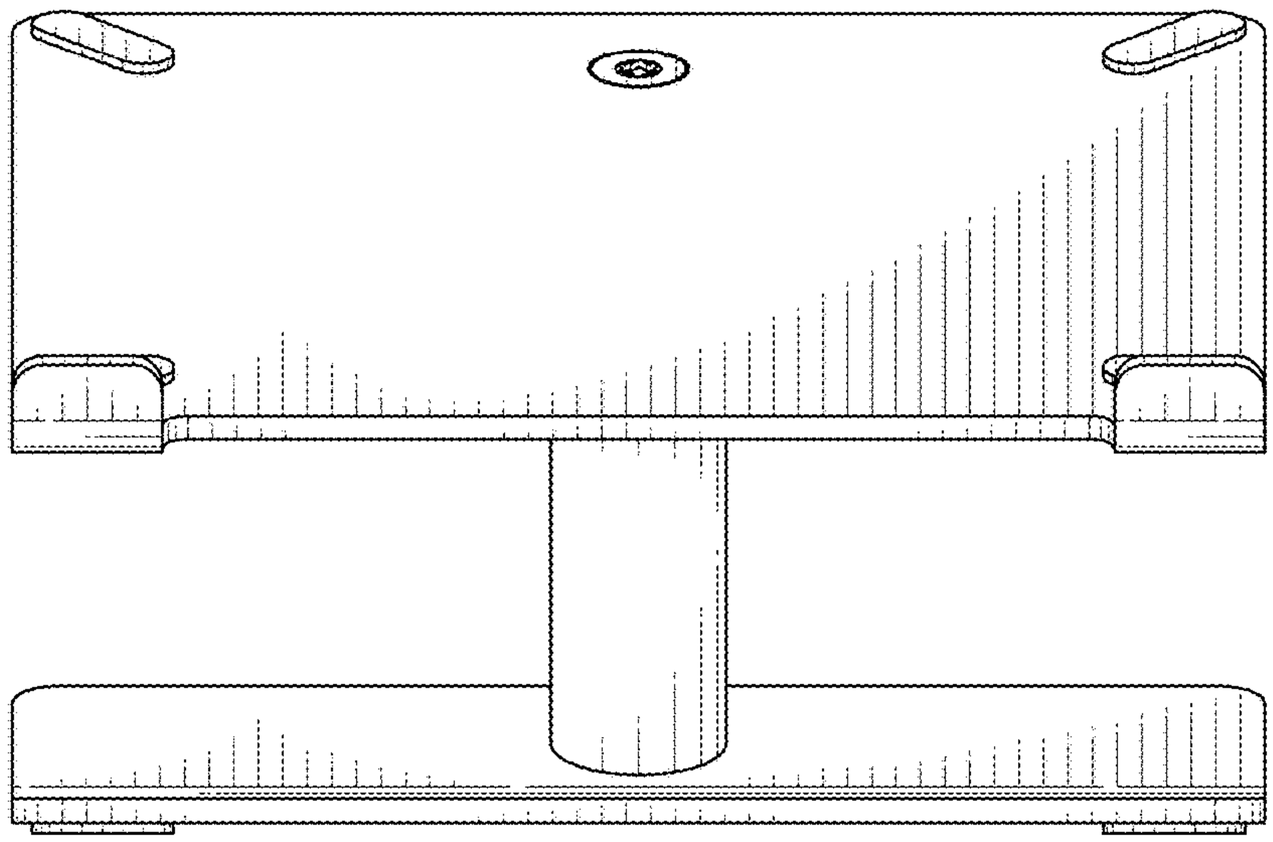

FIG. 3

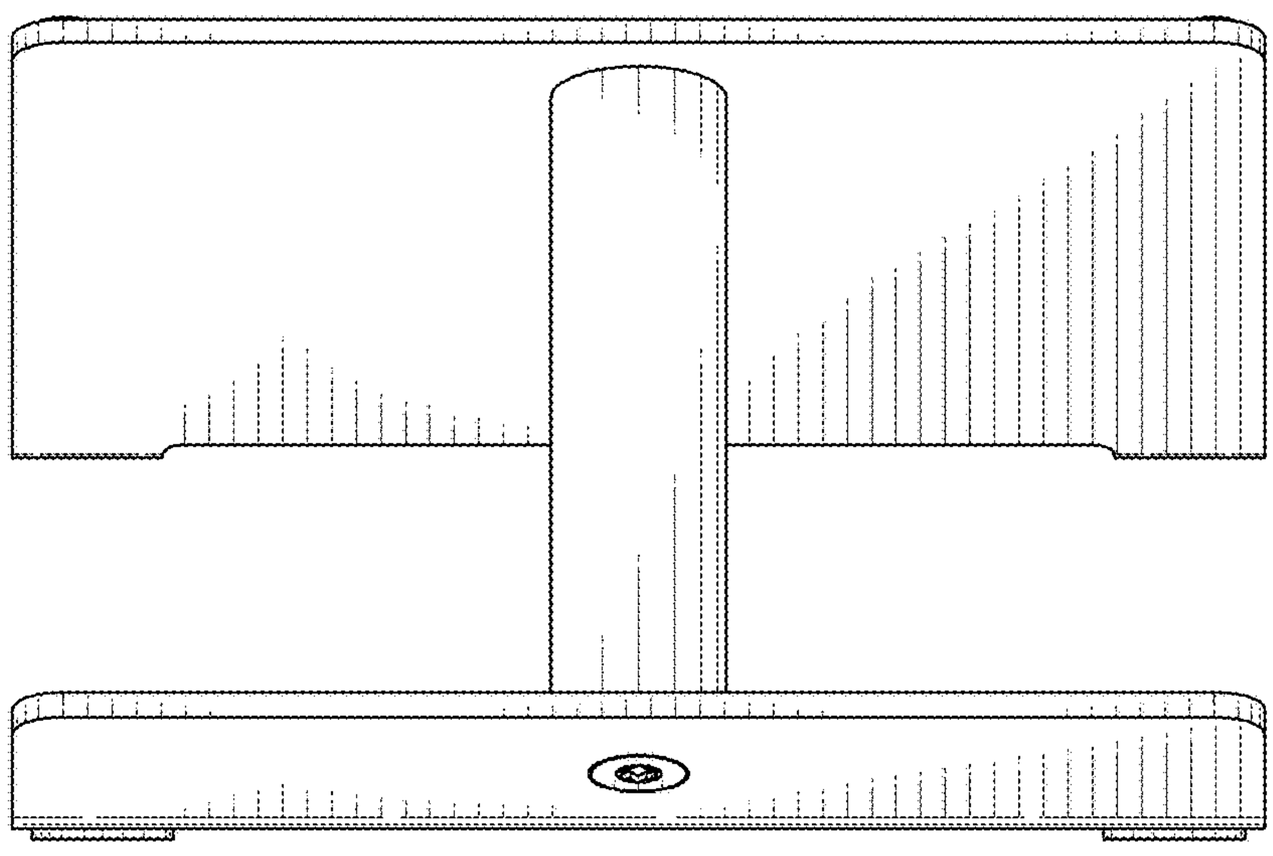

FIG. 4

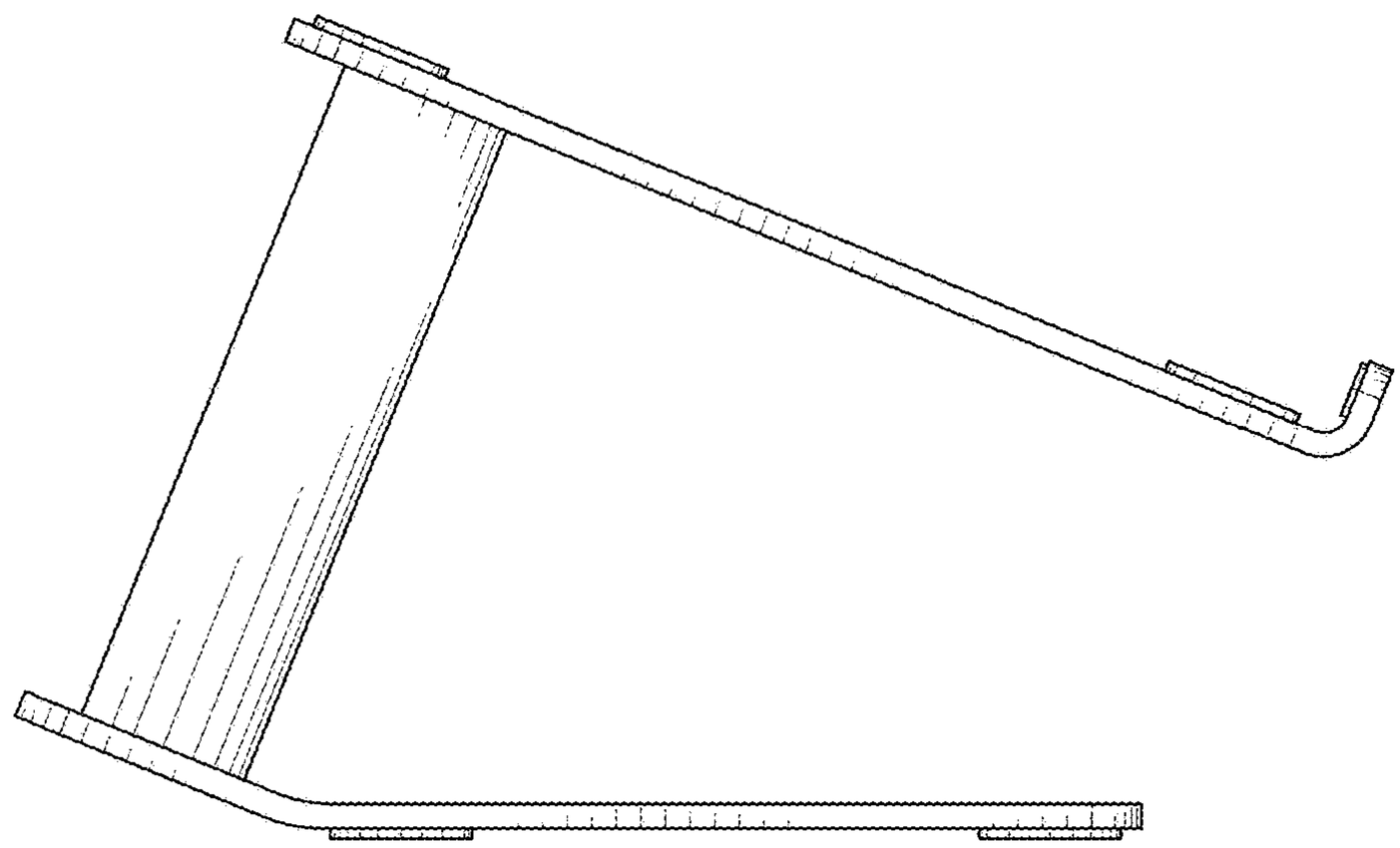

FIG. 5

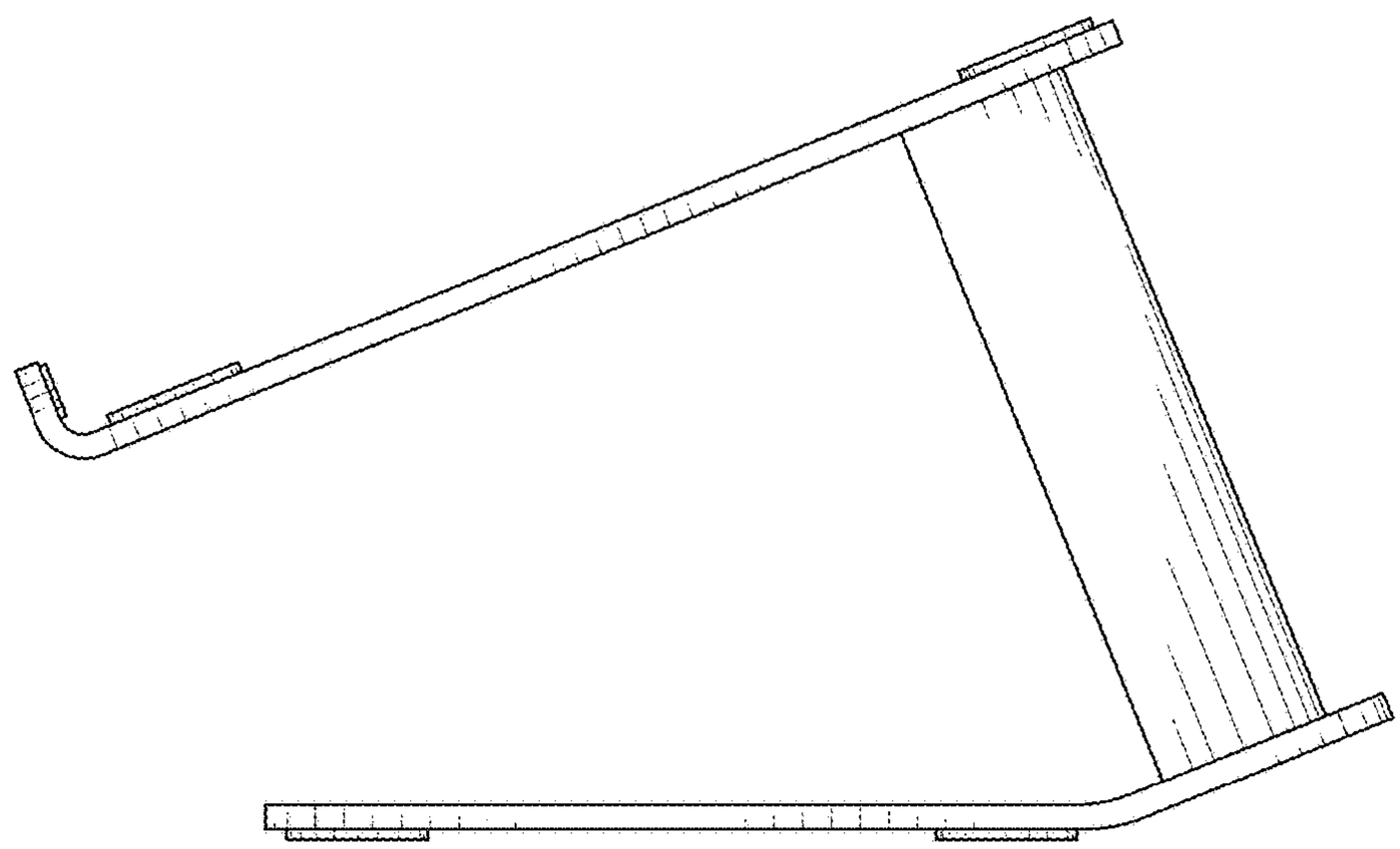

FIG. 6

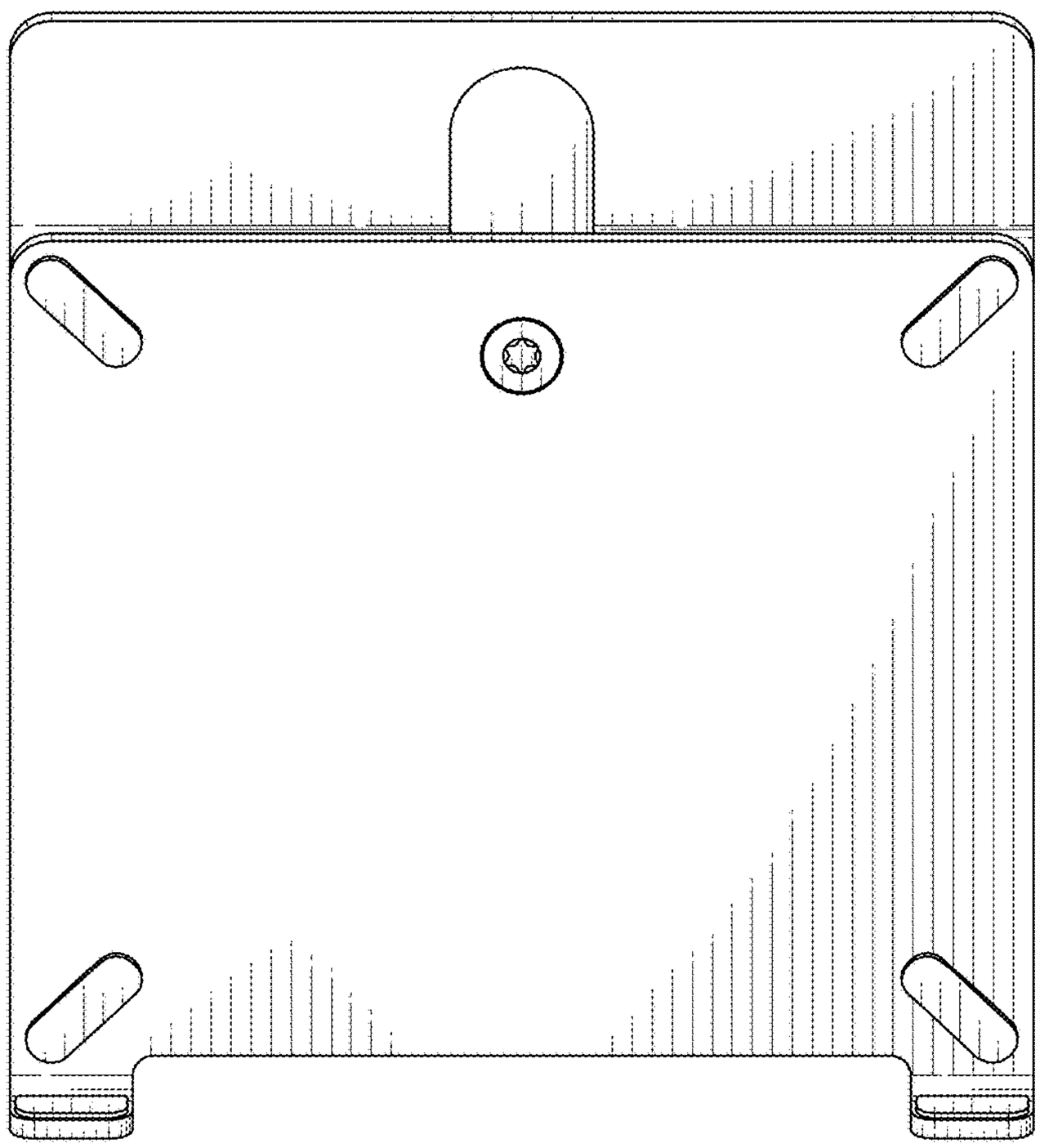

FIG. 7

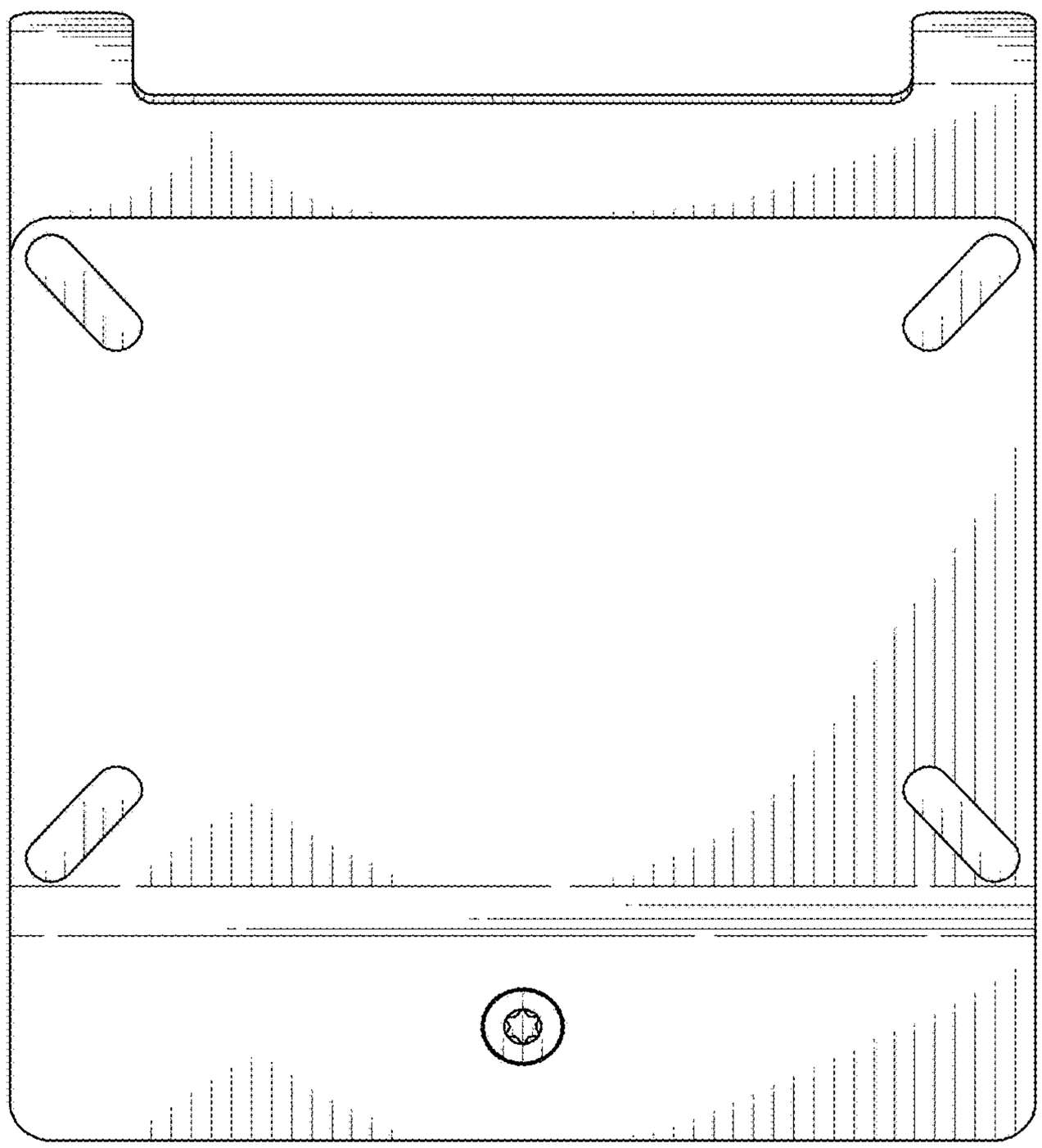

FIG. 8