US00D833061S

(12) United States Design Patent

Antony et al.

(10) Patent No.: US D833,061 S
(45) Date of Patent: ** Nov. 6, 2018

(54) **LIGHTING MODULE LOCKING ENDCAP**

(71) Applicant: **Flex Ltd.**, Singapore (SG)

(72) Inventors: **Ashish Antony**, Anna, TX (US); **Kevin Emr**, Dallas, TX (US); **Jordon Musser**, Dallas, TX (US)

(73) Assignee: **Flex Ltd.**, Singapore (SG)

(**) Term: **15 Years**

(21) Appl. No.: **29/613,372**

(22) Filed: **Aug. 9, 2017**

(51) **LOC (11) Cl.** **26-05**

(52) **U.S. Cl.**
USPC **D26/140**

(58) **Field of Classification Search**
USPC D7/213, 402–409; D13/102, 101, 184, D13/199; D26/155, 152, 154, 60, 74, 75, D26/76, 77, 78, 113, 118, 119, 120, 121, D26/122, 128; D8/349, 354, 363, 364, D8/366, 371, 373, 380, 381, 382
CPC F21Y 2101/00; F21S 2/00; F21S 11/00; F21K 2/00; H01L 31/00; F21V 3/0436
See application file for complete search history.

(56) **References Cited**

U.S. PATENT DOCUMENTS

D120,548	S		5/1940	Guth
D122,145	S		8/1940	MacCarthy
D122,887	S		10/1940	Beals
D123,067	S		10/1940	Rubinstein
D123,887	S		12/1940	Koehler
D127,398	S		5/1941	Jordan
D128,961	S		8/1941	Hrabak
D129,726	S		9/1941	Scribner
D130,570	S		12/1941	Borkland
2,312,617	A		3/1943	Beck
D139,669	S		12/1944	Lippincott
D142,126	S		8/1945	Sabatini
D150,735	S		8/1948	Schwartz et al.
D151,575	S		10/1948	Winkler et al.
2,606,998	A		8/1952	Winkler et al.
D173,255	S		10/1954	Brooks et al.
2,715,449	A		8/1955	Lemmerman et al.
D188,436	S		7/1960	Budke et al.
3,009,055	A		11/1961	Franzese
3,209,142	A		9/1965	Michel et al.
D208,491	S		9/1967	Brooks
3,565,382	A	*	2/1971	Passarelli, Jr. H02G 3/10 174/58
D255,851	S		7/1980	Crane
D291,598	S		8/1987	Elkerbout
4,726,781	A		2/1988	Bernhart et al.
6,061,978	A		5/2000	Dinwoodie et al.
6,076,943	A		6/2000	Lassovsky
D432,000	S	*	10/2000	Hays D8/354
6,274,402	B1		8/2001	Verlinden et al.
6,295,818	B1		10/2001	Ansley et al.
6,313,395	B1		11/2001	Crane et al.
6,333,457	B1		12/2001	Mulligan et al.
6,337,283	B1		1/2002	Verlinden et al.
6,387,726	B1		5/2002	Verlinden et al.
6,423,568	B1		7/2002	Verlinden et al.
6,495,750	B1		12/2002	Dinwoodie
6,501,013	B1		12/2002	Dinwoodie
D472,007	S		3/2003	Weitgasser
6,536,326	B2		3/2003	Unger et al.
6,570,084	B2		5/2003	Dinwoodie
6,684,637	B2		2/2004	Beale
6,722,357	B2		4/2004	Shingleton
6,745,687	B1		6/2004	Kaminar
D492,809	S		7/2004	Weitgasser
6,809,251	B2		10/2004	Dinwoodie
6,809,253	B2		10/2004	Dinwoodie
6,883,290	B2		4/2005	Dinwoodie
D510,315	S		10/2005	Shugar et al.
D511,576	S		11/2005	Shingleton et al.
D516,017	S		2/2006	Mascolo
6,998,288	B1		2/2006	Smith et al.
D519,444	S		4/2006	Mascolo
D521,172	S		5/2006	Chen
7,072,096	B2		7/2006	Holman et al.
7,135,350	B1		11/2006	Smith et al.
7,140,742	B2		11/2006	Pohlert et al.
7,144,214	B2		12/2006	Kinpara et al.
7,155,870	B2		1/2007	Almy
7,172,184	B2		2/2007	Pavani et al.
7,178,295	B2		2/2007	Dinwoodie
7,178,941	B2		2/2007	Roberge et al.
D538,630	S	*	3/2007	Sergi D8/354
7,297,865	B2		11/2007	Terao et al.
7,297,866	B2		11/2007	Aschenbrenner
D562,225	S		2/2008	Almy et al.
7,328,534	B2		2/2008	Dinwoodie
RE40,158	E		3/2008	Weitgasser

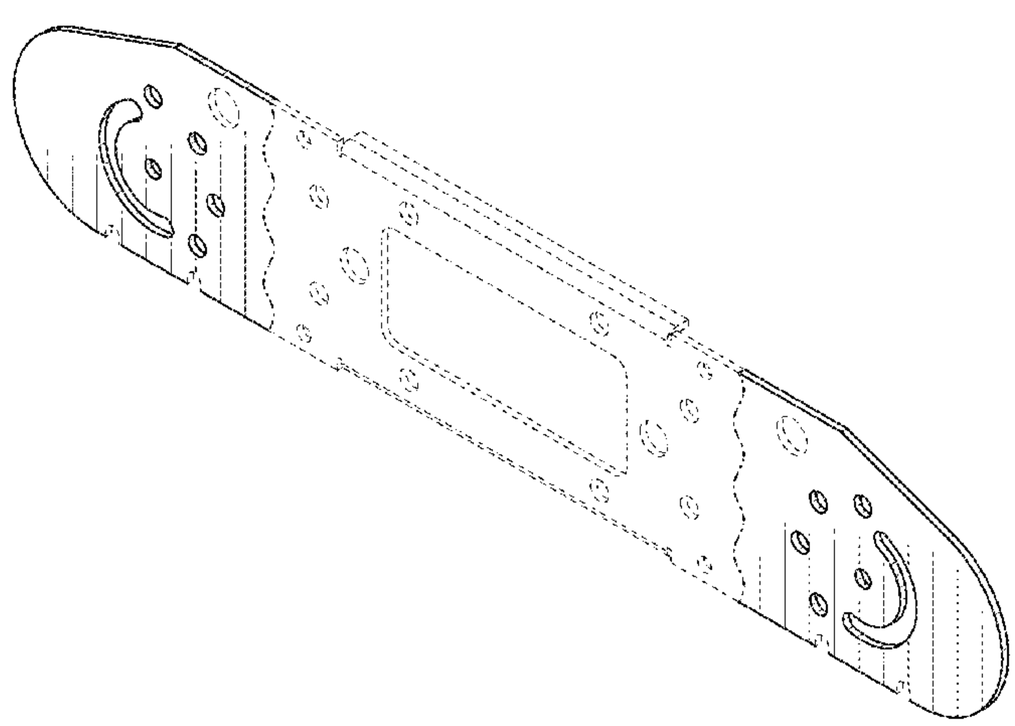

D564,958 S 3/2008 Almy et al.
7,339,110 B1 3/2008 Mulligan et al.
D565,505 S 4/2008 Shugar et al.
7,388,147 B2 6/2008 Mulligan et al.
7,390,961 B2 6/2008 Aschenbrenner et al.
D578,521 S * 10/2008 Sergi D14/238
7,435,134 B2 10/2008 Lenox
7,438,432 B2 10/2008 Yaphe et al.
7,455,787 B2 11/2008 Rose et al.
7,468,485 B1 12/2008 Swanson
D586,737 S 2/2009 Shugar et al.
D592,785 S 5/2009 Bisberg et al.
7,530,830 B1 5/2009 Lenox
7,554,030 B2 6/2009 Shingleton
7,554,031 B2 6/2009 Swanson et al.
7,557,292 B2 7/2009 Shingleton et al.
7,622,912 B1 11/2009 Adams et al.
7,633,006 B1 12/2009 Swanson
7,648,257 B2 1/2010 Villard
7,663,342 B2 2/2010 Kimball et al.
7,670,638 B2 3/2010 Luan et al.
7,681,090 B2 3/2010 Kimball et al.
7,705,237 B2 4/2010 Swanson
7,708,578 B1 5/2010 Lenox
7,718,888 B2 5/2010 Cousins
7,737,357 B2 6/2010 Cousins
7,755,916 B2 7/2010 Krein et al.
7,774,998 B2 8/2010 Aschenbrenner
7,780,472 B2 8/2010 Lenox
7,786,375 B2 8/2010 Swanson et al.
7,804,022 B2 9/2010 De Ceuster
7,807,918 B2 10/2010 Shingleton et al.
7,812,250 B2 10/2010 Smith
7,820,475 B2 10/2010 De Ceuster et al.
7,824,070 B2 11/2010 Higley et al.
7,838,062 B2 11/2010 Cousins et al.
7,851,698 B2 12/2010 De Ceuster et al.
D632,418 S 2/2011 Bisberg et al.
7,883,343 B1 2/2011 Mulligan et al.
7,888,587 B2 2/2011 Shingleton et al.
7,888,588 B2 2/2011 Shingleton
7,893,409 B1 2/2011 Cousins
7,897,867 B1 3/2011 Mulligan et al.
7,945,413 B2 5/2011 Krein
7,956,281 B2 6/2011 O'Brien et al.
7,958,886 B2 6/2011 Barsun et al.
7,982,434 B2 7/2011 Kimball et al.
7,994,657 B2 8/2011 Kimball et al.
8,004,865 B2 8/2011 Krein et al.
8,008,575 B2 8/2011 De Ceuster et al.
D644,609 S 9/2011 Marroquin
D644,610 S 9/2011 Marroquin
8,029,683 B2 10/2011 Rose et al.
8,061,091 B2 11/2011 Botkin et al.
8,062,693 B2 11/2011 Cousins
8,065,844 B2 11/2011 Botkin et al.
8,080,819 B2 12/2011 Mueller et al.
8,101,849 B2 1/2012 Almy et al.
8,108,081 B2 1/2012 Lenox
8,120,933 B2 2/2012 Chapman et al.
8,134,217 B2 3/2012 Rim et al.
8,148,627 B2 4/2012 Rose et al.
8,158,877 B2 4/2012 Klein et al.
8,163,638 B2 4/2012 De Ceuster et al.
8,172,989 B2 5/2012 Pass
8,174,856 B2 5/2012 Chapman
8,188,363 B2 5/2012 Xavier et al.
8,192,048 B2 6/2012 Kristoffersen et al.
8,192,056 B2 6/2012 Villard
8,193,788 B2 6/2012 Chapman
8,198,528 B2 6/2012 Luan et al.
8,206,009 B2 6/2012 Tickner et al.
8,207,444 B2 6/2012 Cousins
8,207,637 B2 6/2012 Marroquin et al.
8,211,731 B2 7/2012 Harley et al.
8,215,071 B2 7/2012 Lenox
8,220,210 B2 7/2012 Botkin et al.
8,221,600 B2 7/2012 Ganti
8,221,601 B2 7/2012 Chen et al.
8,222,516 B2 7/2012 Cousins
8,227,942 B2 7/2012 Marroquin et al.
8,230,850 B2 7/2012 Barsun et al.
8,234,824 B2 8/2012 Botkin et al.
8,242,354 B2 8/2012 Smith
D666,974 S 9/2012 Marroquin et al.
8,258,395 B2 9/2012 Wares
8,263,899 B2 9/2012 Harley et al.
8,276,329 B2 10/2012 Lenox
8,279,642 B2 10/2012 Chapman et al.
8,279,649 B2 10/2012 Esram et al.
8,284,574 B2 10/2012 Chapman et al.
8,291,654 B2 10/2012 Botkin et al.
8,294,022 B2 10/2012 Lenox
D670,996 S * 11/2012 Rogers D8/349
8,304,644 B2 11/2012 Wares et al.
8,308,324 B2 11/2012 Van Horn et al.
8,317,987 B2 11/2012 Abas et al.
D673,320 S 12/2012 Guercio et al.
8,322,300 B2 12/2012 Pavani et al.
8,324,015 B2 12/2012 Harley et al.
8,325,499 B2 12/2012 Krein et al.
8,334,161 B2 12/2012 Dennis et al.
8,334,489 B2 12/2012 Beardsworth et al.
8,336,539 B2 12/2012 Linderman et al.
8,350,411 B2 1/2013 Kimball et al.
8,350,417 B1 1/2013 Dooley et al.
8,352,220 B2 1/2013 Wayne et al.
8,360,601 B2 1/2013 Muschaweck et al.
8,377,738 B2 2/2013 Dennis et al.
8,378,706 B2 2/2013 Kinyon et al.
8,393,707 B2 3/2013 Cudzinovic et al.
8,399,287 B1 3/2013 Mulligan et al.
8,402,703 B2 3/2013 Brandt et al.
8,409,902 B1 4/2013 Harley et al.
8,409,911 B2 4/2013 Cousins
8,409,912 B2 4/2013 de Ceuster et al.
8,423,312 B2 4/2013 Krein
8,424,255 B2 4/2013 Lenox et al.
8,426,974 B2 4/2013 Linderman et al.
D681,574 S * 5/2013 Buxton D13/199
D682,079 S * 5/2013 Chou D8/380
8,448,391 B2 5/2013 Botkin et al.
8,448,652 B2 5/2013 Almy et al.
8,449,238 B2 5/2013 Mulligan et al.
8,450,134 B2 5/2013 De Ceuster et al.
8,450,985 B2 5/2013 Gray et al.
8,451,638 B2 5/2013 Chapman et al.
8,455,806 B2 6/2013 Judkins
8,456,876 B2 6/2013 Chapman
8,460,963 B2 6/2013 Smith
8,461,813 B2 6/2013 Chapman
8,462,518 B2 6/2013 Marroquin et al.
8,482,947 B2 7/2013 Chapman et al.
8,486,746 B2 7/2013 Rim et al.
8,492,253 B2 7/2013 Manning
8,503,200 B2 8/2013 Chapman et al.
8,508,964 B2 8/2013 Gray et al.
8,516,754 B2 8/2013 Botkin et al.
8,519,729 B2 8/2013 Capulong et al.
D690,453 S 9/2013 Guercio et al.
8,528,366 B2 9/2013 Berrada Sounni et al.
8,530,990 B2 9/2013 Linderman et al.
8,534,007 B2 9/2013 Almy et al.
RE44,515 E * 10/2013 Ciungan D14/452
8,546,681 B2 10/2013 Wares et al.
8,548,637 B2 10/2013 Lenox
8,552,288 B2 10/2013 Xavier
8,557,093 B2 10/2013 Cousins et al.
8,558,101 B2 10/2013 Mascolo et al.
8,563,849 B2 10/2013 Johnston et al.
8,567,134 B1 10/2013 Grushkowitz et al.
8,572,836 B2 11/2013 Lenox
8,580,599 B2 11/2013 Rim et al.
8,584,406 B2 11/2013 Wexler et al.
8,584,667 B2 11/2013 Linderman et al.
8,586,397 B2 11/2013 Wu et al.
8,586,403 B2 11/2013 Harley et al.
8,597,970 B2 12/2013 Cousins et al.

8,599,587 B2 12/2013 Chapman et al.
8,604,404 B1 12/2013 Linderman
8,609,977 B2 12/2013 Jones et al.
8,611,107 B2 12/2013 Chapman et al.
8,615,941 B2 12/2013 Botkin et al.
8,624,561 B1 1/2014 Slavin
8,624,621 B2 1/2014 Capulong et al.
8,629,383 B2 1/2014 Beardsworth et al.
8,630,077 B2 1/2014 Johnston et al.
8,634,216 B2 1/2014 Chapman
8,636,198 B1 1/2014 Linderman et al.
8,647,911 B2 2/2014 Smith
8,650,813 B2 2/2014 Botkin et al.
8,656,660 B2 2/2014 Danning
8,658,454 B2 2/2014 Pass et al.
D700,991 S 3/2014 Johnson et al.
8,661,753 B2 3/2014 Lenox
8,662,008 B2 3/2014 Abas et al.
8,664,519 B2 3/2014 De Ceuster et al.
8,679,889 B2 3/2014 Cousins et al.
D702,799 S * 4/2014 Coviello D22/108
D703,858 S 4/2014 Miller
8,683,761 B2 4/2014 Danning
8,692,111 B2 4/2014 Kim et al.
8,709,851 B2 4/2014 Dennis et al.
8,712,745 B2 4/2014 Wayne et al.
8,716,596 B1 5/2014 Swanson
8,737,093 B1 5/2014 Baker et al.
8,737,100 B2 5/2014 Chapman et al.
8,744,791 B1 6/2014 Kraft et al.
8,748,736 B2 6/2014 Luan et al.
8,754,627 B1 6/2014 Le
8,757,567 B2 6/2014 Ciasulli et al.
8,763,316 B2 7/2014 Concho et al.
8,767,421 B2 7/2014 Chapman
8,772,894 B2 7/2014 Smith
8,774,007 B2 7/2014 Hussain et al.
8,776,781 B2 7/2014 Meydbray
8,778,787 B2 7/2014 Manning
8,785,233 B2 7/2014 Loscutoff et al.
8,785,236 B2 7/2014 Harley et al.
8,785,830 B2 7/2014 Judkins
8,786,095 B2 7/2014 Linderman et al.
8,790,957 B2 7/2014 Li et al.
8,793,942 B2 8/2014 Almy et al.
8,796,061 B2 8/2014 Bunea
8,796,535 B2 8/2014 Linderman
8,796,884 B2 8/2014 Naiknaware et al.
8,802,486 B2 8/2014 Li et al.
8,809,671 B2 8/2014 Linderman et al.
8,815,631 B2 8/2014 Cousins
8,817,510 B2 8/2014 Esram et al.
8,818,924 B2 8/2014 Wayne et al.
8,822,257 B2 9/2014 Rim et al.
8,822,262 B2 9/2014 Loscutoff et al.
8,822,812 B2 9/2014 Wares
8,823,356 B2 9/2014 Chapman
8,824,178 B1 9/2014 Baker et al.
8,839,784 B2 9/2014 Wares et al.
8,842,454 B2 9/2014 Johnson et al.
8,859,933 B2 10/2014 Harley et al.
8,860,162 B2 10/2014 Linderman et al.
8,860,242 B1 10/2014 Pruett et al.
8,877,617 B2 11/2014 Wong et al.
8,878,053 B2 11/2014 Cousins
8,881,415 B2 11/2014 Barton
8,883,247 B2 11/2014 Cousins et al.
8,893,713 B2 11/2014 Wares et al.
8,901,010 B2 12/2014 Westerberg et al.
8,904,717 B2 12/2014 Lenox
8,912,038 B2 12/2014 Li et al.
8,922,062 B2 12/2014 Johnson et al.
8,922,185 B2 12/2014 Ehlmann et al.
8,929,094 B2 1/2015 Marroquin et al.
8,943,765 B2 2/2015 Danning et al.
8,945,978 B2 2/2015 Behnke
8,946,541 B2 2/2015 Wares et al.
8,955,267 B2 2/2015 Wexler et al.
8,956,018 B2 2/2015 Deshpande et al.
8,962,082 B2 2/2015 Pavani et al.
8,962,373 B2 2/2015 Cousins et al.
8,963,185 B2 2/2015 Cousins
8,963,375 B2 2/2015 DeGraaff
8,964,401 B2 2/2015 Escamilla et al.
8,975,175 B1 3/2015 Pass
8,975,717 B2 3/2015 Smith
8,988,096 B1 3/2015 Naiknaware
8,991,682 B2 3/2015 Linderman et al.
8,992,803 B2 3/2015 Loscutoff et al.
9,010,041 B2 4/2015 Danning
9,018,033 B2 4/2015 Wu et al.
9,018,516 B2 4/2015 Shepherd et al.
9,020,653 B2 4/2015 Lenox
D729,041 S * 5/2015 Smith D8/349
9,029,689 B2 5/2015 Phu et al.
9,035,167 B2 5/2015 Swanson et al.
9,035,168 B2 5/2015 Barton
9,035,172 B2 5/2015 Kim et al.
9,035,633 B1 5/2015 Slavin et al.
9,038,421 B2 5/2015 Berrada Sounni et al.
9,048,740 B2 6/2015 Gray et al.
9,054,255 B2 6/2015 Swanson et al.
9,059,604 B2 6/2015 Johnson
9,062,854 B2 6/2015 Livesay et al.
9,065,354 B2 6/2015 Chapman et al.
9,070,804 B2 6/2015 Cousins
9,077,202 B1 7/2015 Baker
9,082,925 B2 7/2015 Solomon et al.
9,083,121 B2 7/2015 DeGraaff et al.
9,087,939 B2 7/2015 Harley et al.
9,093,919 B2 7/2015 Chapman et al.
9,101,082 B1 8/2015 Dorenkamp et al.
9,112,066 B2 8/2015 Dennis et al.
9,112,097 B2 8/2015 Tu
9,116,202 B2 8/2015 Capulong et al.
9,136,710 B1 9/2015 Baker et al.
9,142,696 B2 9/2015 Loscutoff et al.
9,147,795 B2 9/2015 Li et al.
9,153,712 B2 10/2015 Zhu
9,159,521 B1 10/2015 Chen et al.
9,160,408 B2 10/2015 Krohne et al.
9,166,079 B2 10/2015 Manning
9,178,104 B2 11/2015 Moors et al.
9,184,324 B2 11/2015 Wares et al.
9,184,327 B2 11/2015 Rose et al.
9,185,759 B2 11/2015 Nieberlein et al.
9,186,741 B2 11/2015 Kumaria et al.
9,190,839 B2 11/2015 Johnston et al.
9,193,014 B2 11/2015 Danning
9,196,758 B2 11/2015 Rim et al.
D744,684 S 12/2015 Guercio et al.
D744,690 S 12/2015 Boyer et al.
9,202,960 B2 12/2015 Luan et al.
9,212,808 B2 12/2015 Higley et al.
9,217,206 B2 12/2015 Behnke et al.
9,219,173 B2 12/2015 Swanson et al.
9,222,193 B2 12/2015 Abas et al.
9,224,902 B2 12/2015 Swanson
9,225,256 B2 12/2015 Chapman et al.
9,225,285 B2 12/2015 Peurach et al.
9,231,129 B2 1/2016 Harley et al.
9,231,145 B2 1/2016 Smith
9,239,153 B2 1/2016 Goodman et al.
9,240,682 B2 1/2016 Sivakumar et al.
9,243,818 B2 1/2016 Shugar et al.
9,246,037 B2 1/2016 Linderman
9,246,046 B1 1/2016 Harrington et al.
9,249,044 B2 2/2016 Judkins et al.
9,249,523 B2 2/2016 Rim
9,252,314 B2 2/2016 Wares et al.
9,252,319 B2 2/2016 Loscutoff et al.
9,253,935 B2 2/2016 Morris et al.
9,257,575 B1 2/2016 Pass et al.
9,257,847 B2 2/2016 Johnson et al.
9,263,183 B2 2/2016 Chapman et al.
9,263,601 B2 2/2016 Wu et al.
9,263,602 B2 2/2016 Harley et al.
9,263,622 B2 2/2016 Pass et al.

9,263,625 B2 2/2016 Smith et al.
9,263,895 B2 2/2016 Naiknaware et al.
9,266,468 B2 2/2016 Mizushiro et al.
9,267,649 B2 2/2016 Janik et al.
D751,976 S 3/2016 Mackler et al.
9,273,845 B2 3/2016 Eom et al.
9,276,635 B2 3/2016 Rothblum et al.
9,279,457 B2 3/2016 Grushkowitz
9,279,569 B2 3/2016 Lamonato et al.
9,281,419 B2 3/2016 Klein et al.
9,281,429 B2 3/2016 Xavier et al.
9,281,431 B2 3/2016 Linderman
9,285,081 B2 3/2016 Douglas et al.
9,293,624 B2 3/2016 Cudzinovic et al.
9,300,224 B2 3/2016 Johnson et al.
D754,064 S 4/2016 Mackler et al.
9,303,285 B2 4/2016 Piazza et al.
9,306,085 B2 4/2016 Westerberg et al.
9,312,042 B2 4/2016 Sewell et al.
9,312,406 B2 4/2016 Loscutoff et al.
9,312,425 B2 4/2016 Kim et al.
9,316,417 B2 4/2016 Danning
9,322,437 B2 4/2016 Agullo
9,322,963 B2 4/2016 Linderman et al.
9,326,339 B2 4/2016 Nieberlein et al.
9,328,427 B2 5/2016 Behnke
9,329,322 B2 5/2016 Yamada et al.
9,337,369 B2 5/2016 Smith
9,342,088 B2 5/2016 Batten et al.
9,347,619 B2 5/2016 Schupple et al.
9,353,970 B2 5/2016 Linderman et al.
9,362,427 B2 6/2016 Sewell et al.
D815,031 S * 4/2018 Yang D13/102
2002/0181229 A1 12/2002 Wei
2011/0312119 A1 12/2011 Rose et al.
2012/0134189 A1 5/2012 Krein
2012/0180845 A1 7/2012 Cole et al.
2012/0192925 A1 8/2012 Grushkowitz et al.
2012/0216852 A1 8/2012 Almy et al.
2013/0000694 A1 1/2013 Bunea et al.
2013/0106196 A1 5/2013 Johnson et al.
2013/0239947 A1 9/2013 Almy et al.
2013/0255749 A1 10/2013 Kinyon et al.
2013/0305787 A1 11/2013 Berrada Sounni et al.
2013/0340379 A1 12/2013 Danning
2013/0340380 A1 12/2013 Danning
2014/0000187 A1 1/2014 Botkin et al.
2014/0000695 A1 1/2014 Stone
2014/0000705 A1 1/2014 Sounni et al.
2014/0014499 A1 1/2014 Cousins et al.
2014/0034111 A1 2/2014 Bunea et al.
2014/0034122 A1 2/2014 Cousins
2014/0034455 A1 2/2014 Mulligan et al.
2014/0036563 A1 2/2014 Chapman et al.
2014/0048119 A1 2/2014 Johnston et al.
2014/0090637 A1 4/2014 Grushkowitz
2014/0090638 A1 4/2014 Grushkowitz
2014/0090701 A1 4/2014 Rim et al.
2014/0102505 A1 4/2014 Lenox
2014/0102512 A1 4/2014 Jones et al.
2014/0116495 A1 5/2014 Kim et al.
2014/0133197 A1 5/2014 Chapman
2014/0150846 A1 6/2014 Beardsworth et al.
2014/0174905 A1 6/2014 Landry
2014/0182661 A1 7/2014 Kinyon
2014/0190561 A1 7/2014 De Ceuster et al.
2014/0202492 A1 7/2014 Grossman et al.
2014/0238470 A1 8/2014 Ciasulli et al.
2014/0261626 A1 9/2014 Ripoll Agullo
2014/0268908 A1 9/2014 Zhou et al.
2014/0290715 A1 10/2014 Meydbray
2014/0291852 A1 10/2014 Linderman et al.
2014/0305501 A1 10/2014 Li et al.
2014/0306092 A1 10/2014 Judkins
2014/0311054 A1 10/2014 Concho et al.
2014/0322855 A1 10/2014 Bunea
2014/0345688 A1 11/2014 Cousins
2014/0352761 A1 12/2014 Linderman et al.
2014/0373910 A1 12/2014 Luan et al.
2015/0000724 A1 1/2015 Pass et al.
2015/0004737 A1 1/2015 Harley
2015/0020867 A1 1/2015 Linderman et al.
2015/0040944 A1 2/2015 Dinwoodie et al.
2015/0047690 A1 2/2015 Shen et al.
2015/0053248 A1 2/2015 Rim et al.
2015/0083215 A1 3/2015 Cousins
2015/0090328 A1 4/2015 Smith
2015/0090329 A1 4/2015 Pass
2015/0108692 A1 4/2015 Harley et al.
2015/0117067 A1 4/2015 Naiknaware et al.
2015/0122305 A1 5/2015 Marroquin et al.
2015/0128437 A1 5/2015 Barton
2015/0144197 A1 5/2015 Cousins et al.
2015/0146315 A1 5/2015 Wares et al.
2015/0155819 A1 6/2015 Wexler et al.
2015/0163074 A1 6/2015 Pruett et al.
2015/0180238 A1 6/2015 DeGraaff
2015/0180404 A1 6/2015 Braunstein et al.
2015/0194539 A1 7/2015 Shepherd et al.
2015/0194927 A1 7/2015 Naiknaware
2015/0206988 A1 7/2015 Loscutoff et al.
2015/0212535 A1 7/2015 Ehlmann et al.
2015/0214744 A1 7/2015 Lenox
2015/0222225 A1 8/2015 Danning
2015/0229221 A1 8/2015 Gray et al.
2015/0249405 A1 9/2015 Chapman et al.
2015/0249423 A1 9/2015 Braunstein et al.
2015/0263200 A1 9/2015 Dennis et al.
2015/0270803 A1 9/2015 Barton
2015/0280038 A1 10/2015 Sethi et al.
2015/0282365 A1 10/2015 Escamilla et al.
2015/0287875 A1 10/2015 Phu et al.
2015/0288328 A1 10/2015 Swanson et al.
2015/0311357 A1 10/2015 Harley et al.
2015/0325710 A1 11/2015 Tu
2015/0326168 A1 11/2015 Johnson
2015/0326178 A1 11/2015 Capulong et al.
2015/0333617 A1 11/2015 Chapman et al.
2015/0340868 A1 11/2015 Chapman
2015/0342084 A1 11/2015 Dorenkamp et al.
2015/0349158 A1 12/2015 Manning
2015/0349706 A1 12/2015 Grossman et al.
2015/0349709 A1 12/2015 Ponec et al.
2015/0364625 A1 12/2015 Solomon et al.
2015/0372638 A1 12/2015 DeGraaff et al.
2015/0377518 A1 12/2015 Maxey et al.
2015/0380578 A1 12/2015 Zhu
2016/0011246 A1 1/2016 Fischer et al.
2016/0020827 A1 1/2016 Krohne et al.
2016/0027953 A1 1/2016 Moors et al.
2016/0028345 A1 1/2016 Wares et al.
2016/0035908 A1 2/2016 Rose et al.
2016/0036380 A1 2/2016 Johnston et al.
2016/0043267 A1 2/2016 Rim et al.
2016/0043684 A1 2/2016 Harif
2016/0064576 A1 3/2016 Luan et al.
2016/0065119 A1 3/2016 Danning
2016/0071991 A1 3/2016 Smith
2016/0071996 A1 3/2016 Swanson et al.
2016/0071999 A1 3/2016 Loscutoff et al.
2016/0079450 A1 3/2016 Harley et al.
2016/0079911 A1 3/2016 Rose et al.
2016/0087425 A1 3/2016 Sivakumar et al.
2016/0090662 A1 3/2016 Capulong et al.
2016/0105027 A1 4/2016 Johnson et al.
2016/0108541 A1 4/2016 Abas et al.
2016/0111583 A1 4/2016 Harrington et al.
2016/0112003 A1 4/2016 Morris et al.
2016/0118516 A1 4/2016 Harley et al.
2016/0133759 A1 5/2016 Pass et al.
2016/0133767 A1 5/2016 Smith et al.
2016/0134233 A1 5/2016 Chapman et al.
2016/0142100 A1 5/2016 Rothblum et al.
2016/0156309 A1 6/2016 Almogy et al.
2016/0164300 A1 6/2016 Johnson et al.
2016/0164427 A1 6/2016 Chapman et al.

OTHER PUBLICATIONS

Flex Essentials Series Sell Specification Sheets, Published Jun. 2016 (28 pages).
Flex Lighting Solutions Specification Sheets, Essentials Series, Published May 2017 (9 pages).

* cited by examiner

Primary Examiner — Mark A Goodwin
Assistant Examiner — Benjamin M Weeks
(74) *Attorney, Agent, or Firm* — Carter, DeLuca, Farrell & Schmidt, LLP

(57) **CLAIM**

The ornamental design for a lighting module locking endcap, as shown and described.

DESCRIPTION

FIG. **1** is a perspective view of one embodiment of a lighting module locking endcap in accordance with the present design;
FIG. **2** is a front view of the lighting module locking endcap of FIG. **1**;
FIG. **3** is a rear view of the lighting module locking endcap of FIG. **1**;
FIG. **4** is a left, side view of the lighting module locking endcap of FIG. **1**;
FIG. **5** is a right, side view of the lighting module locking endcap of FIG. **1**;
FIG. **6** is a top view of the lighting module locking endcap of FIG. **1**;
FIG. **7** is a bottom view of the lighting module locking endcap of FIG. **1**; and
FIGS. **8-11** are progressive front views of the lighting module locking endcap of FIG. **1**, illustrating a pair of rotatable lighting assemblies (shown in broken lines) attached to the lighting module locking endcap of FIG. **1** on opposed sides thereof and disposed in various positions;
FIG. **12** is a perspective view of another embodiment of a lighting module locking endcap in accordance with the present design;
FIG. **13** is a front view of the lighting module locking endcap of FIG. **12**;
FIG. **14** is a rear view of the lighting module locking endcap of FIG. **12**;
FIG. **15** is a left, side view of the lighting module locking endcap of FIG. **12**;
FIG. **16** is a right, side view of the lighting module locking endcap of FIG. **12**;
FIG. **17** is a top view of the lighting module locking endcap of FIG. **12**;
FIG. **18** is a bottom view of the lighting module locking endcap of FIG. **12**; and,
FIGS. **19-22** are progressive front views of the lighting module locking endcap of FIG. **12**, illustrating a pair of rotatable lighting assemblies (shown in broken lines) attached to the lighting module locking endcap of FIG. **12** on opposed sides thereof and disposed in various positions.
The broken lines provided in the drawings form no part of the claimed design.

1 Claim, 7 Drawing Sheets

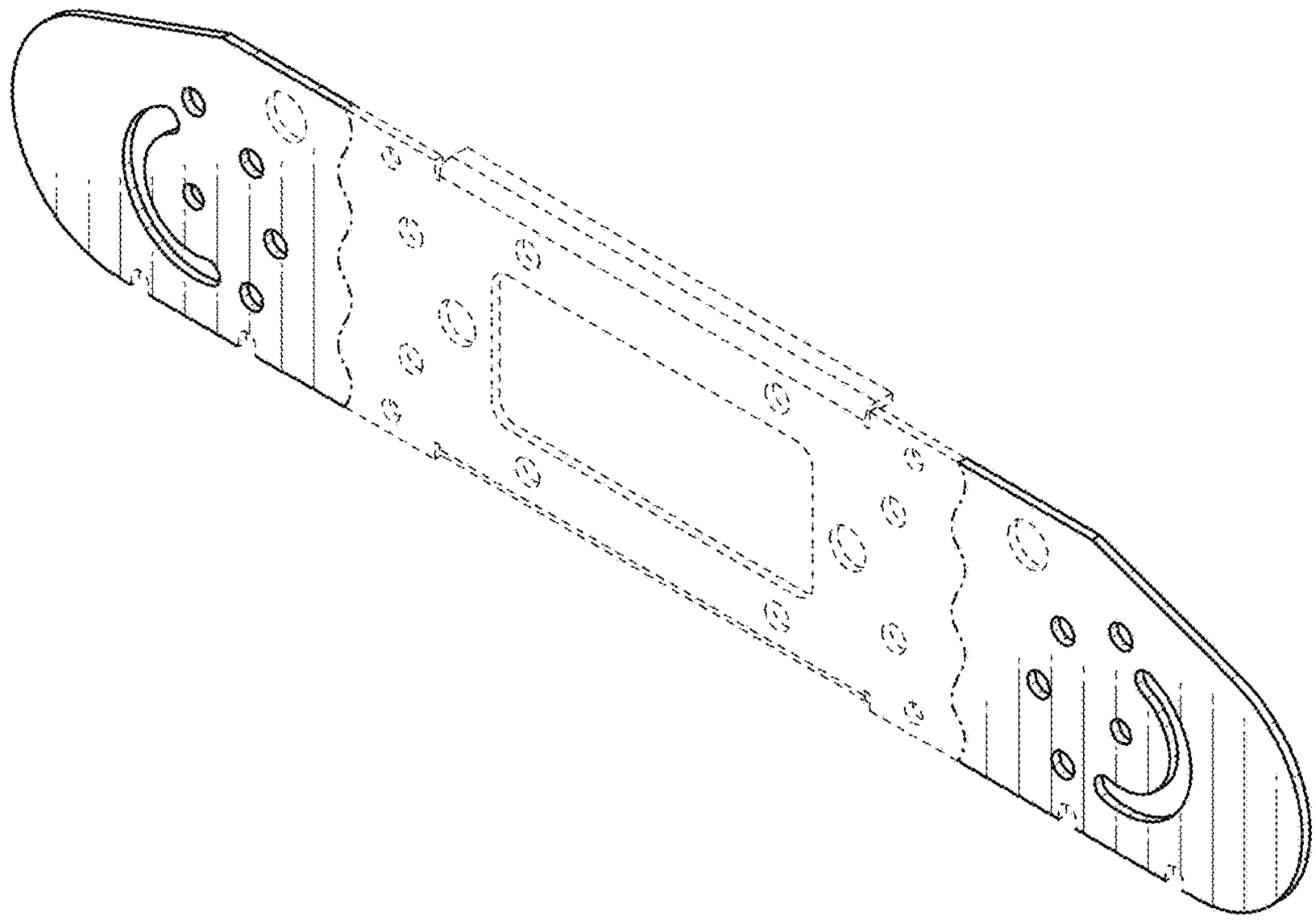

FIG. 1

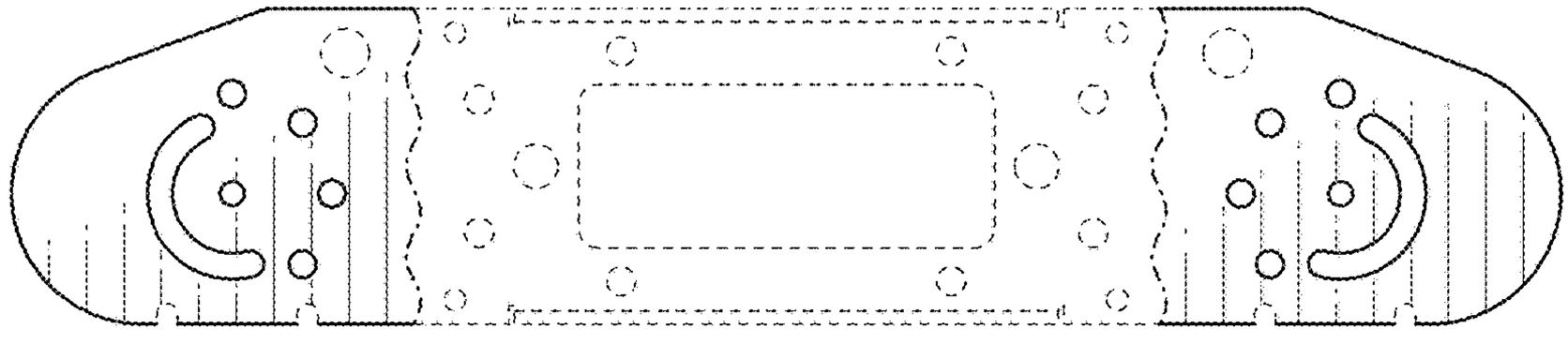

FIG. 2

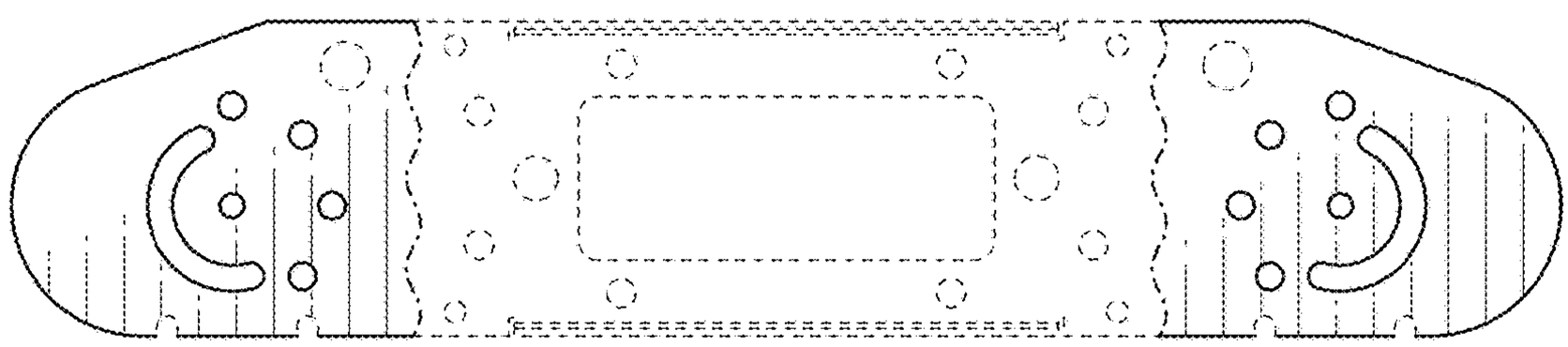

FIG. 3

FIG. 4

FIG. 5

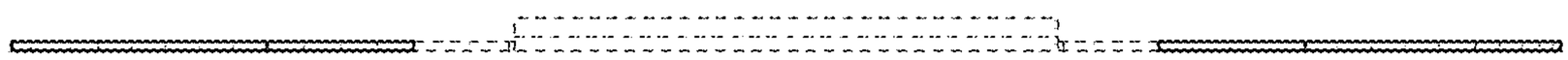

FIG. 6

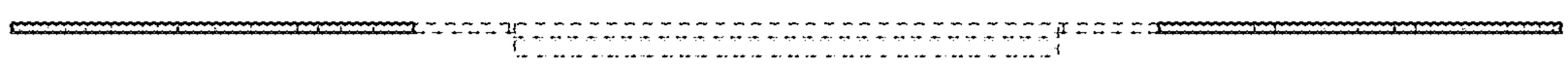

FIG. 7

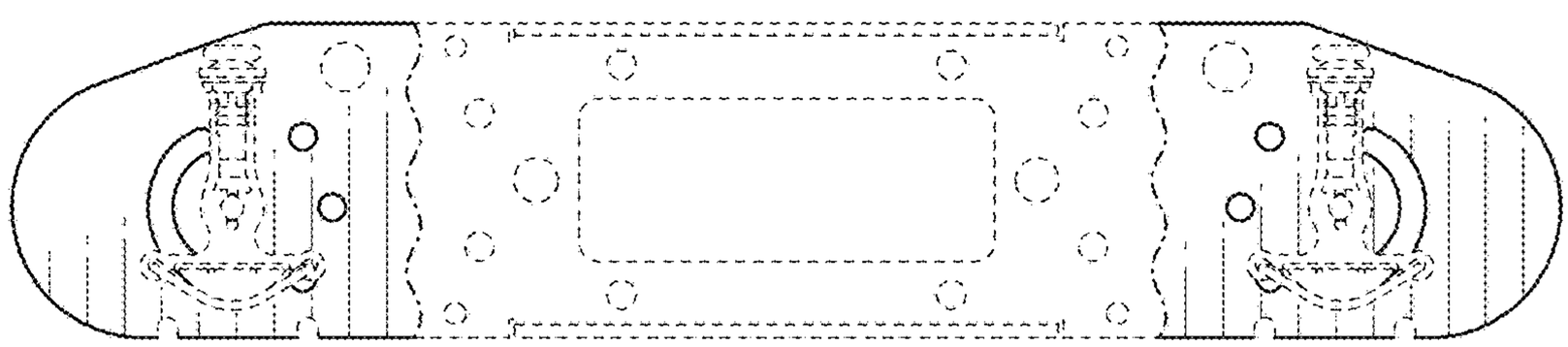

FIG. 8

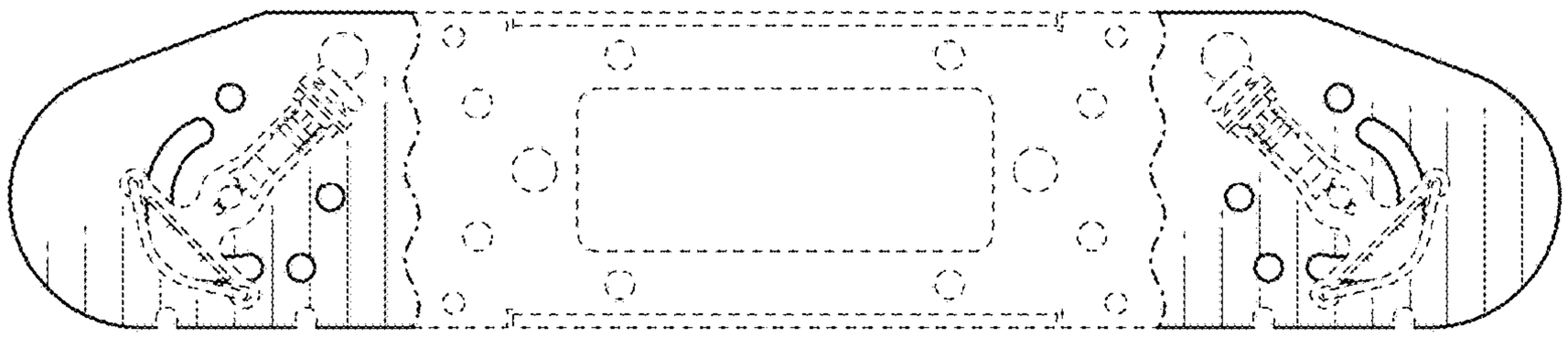

FIG. 9

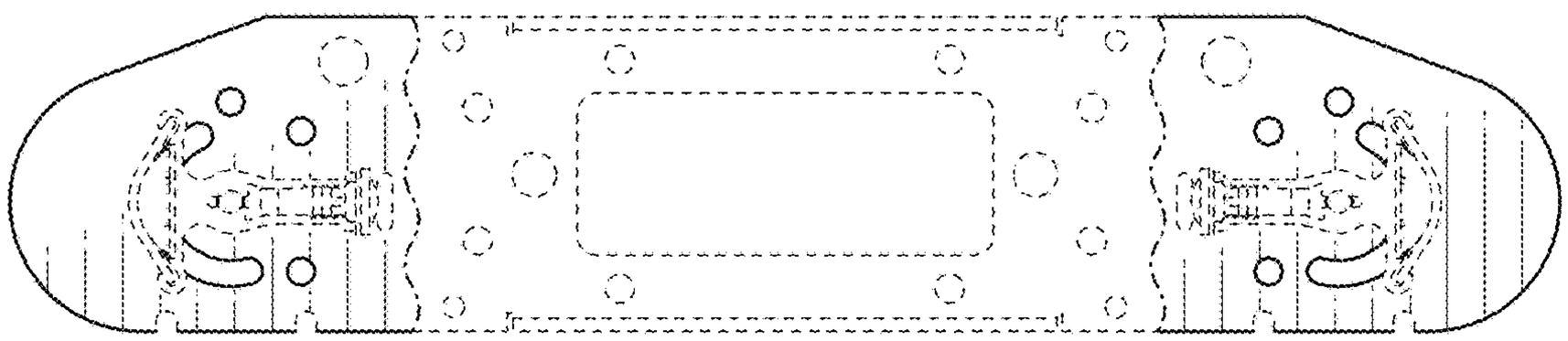

FIG.10

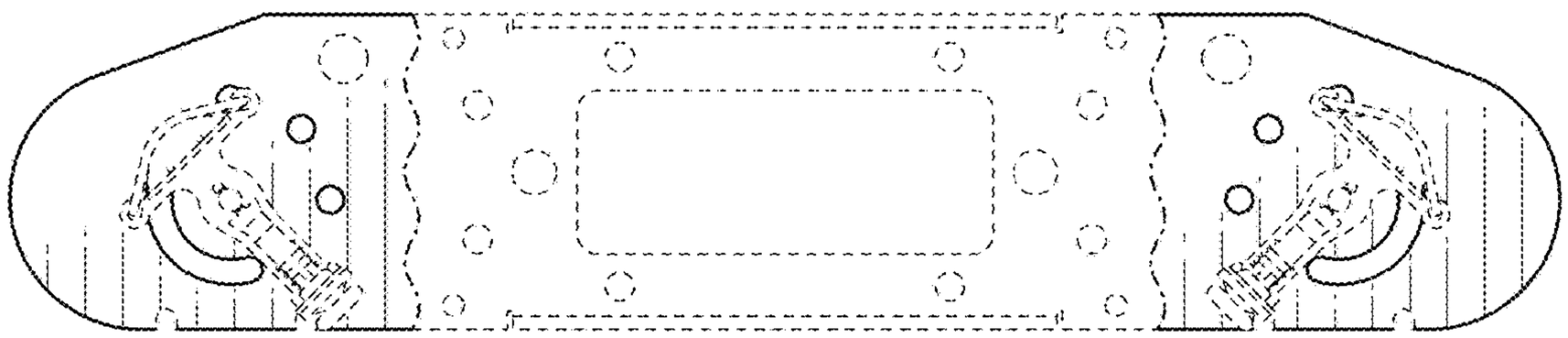

FIG. 11

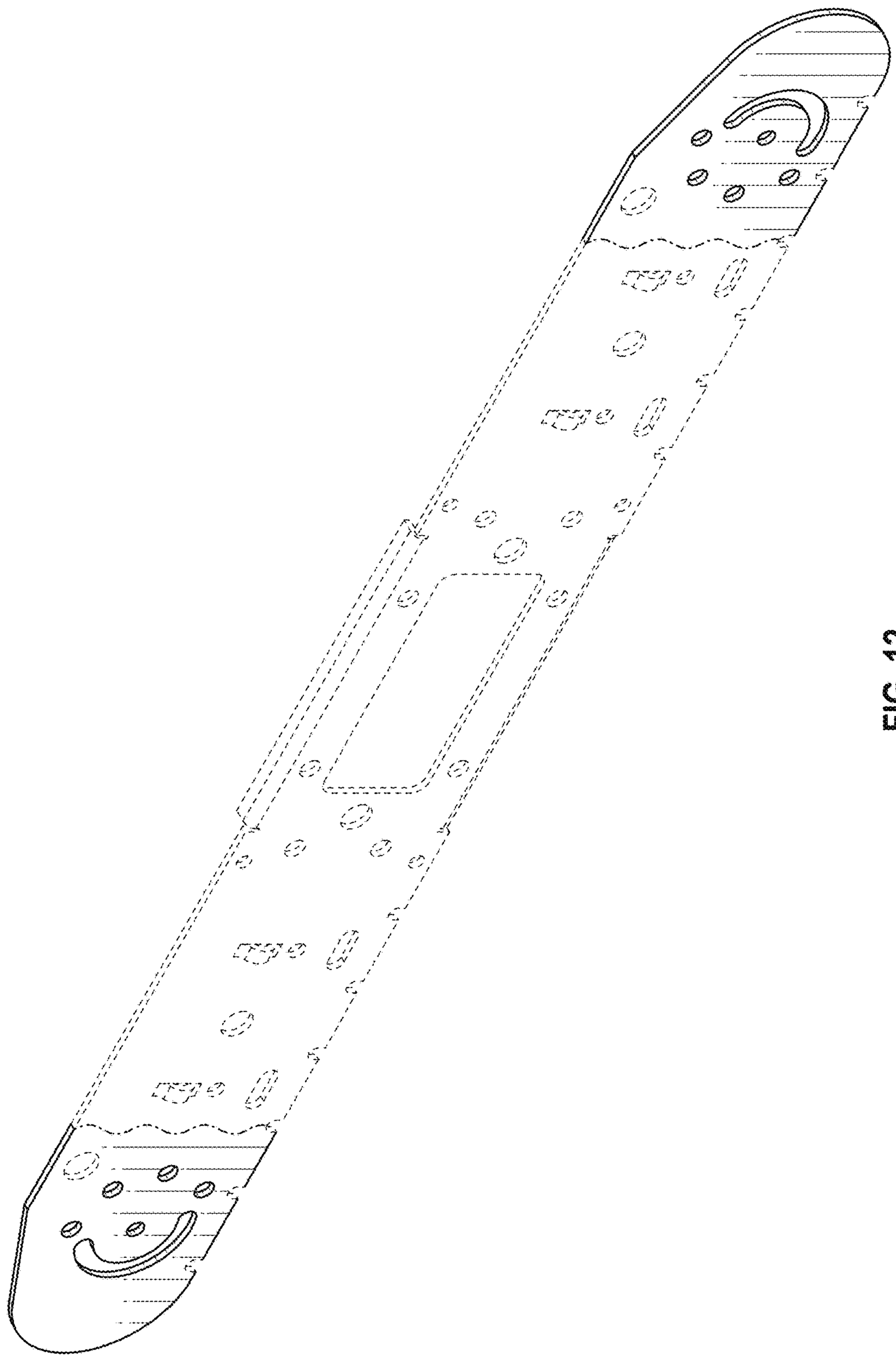

FIG. 12

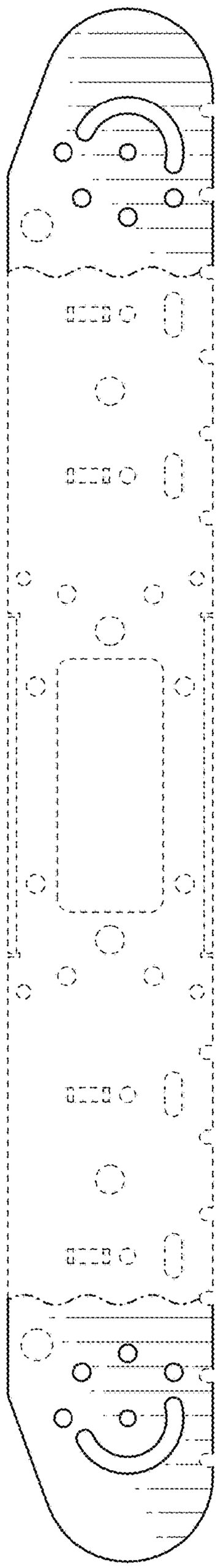

FIG. 13

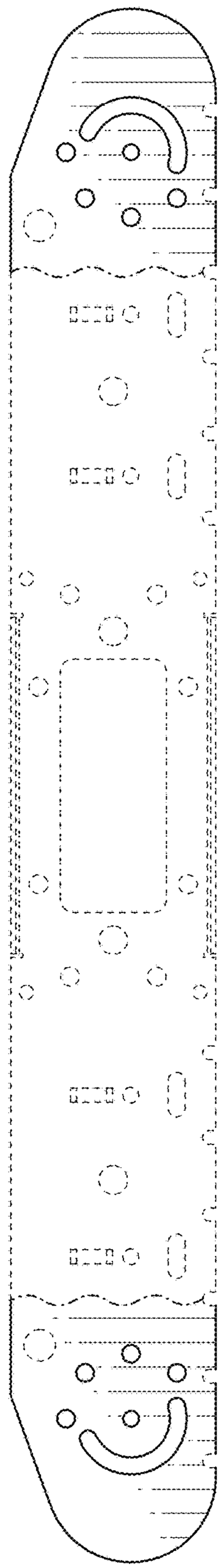

FIG. 14

FIG. 15

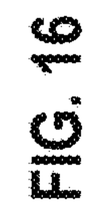

FIG. 16

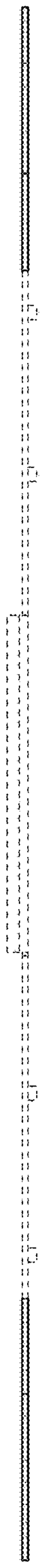

FIG. 17

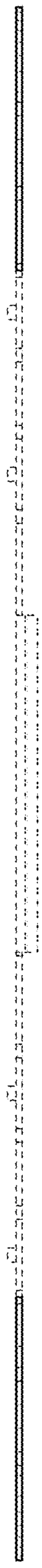

FIG. 18

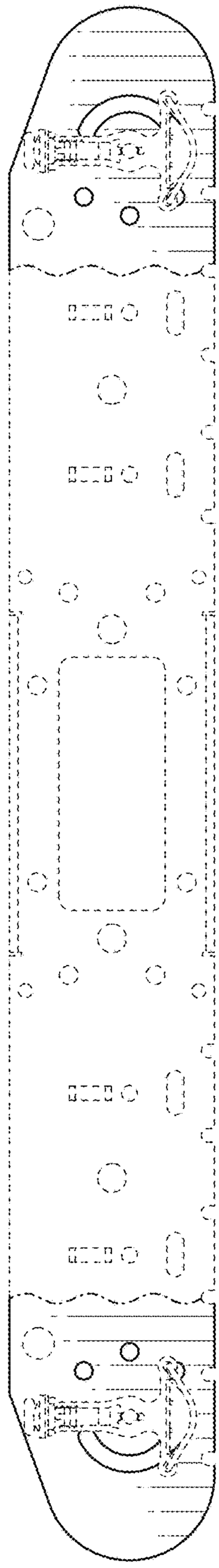

FIG. 19

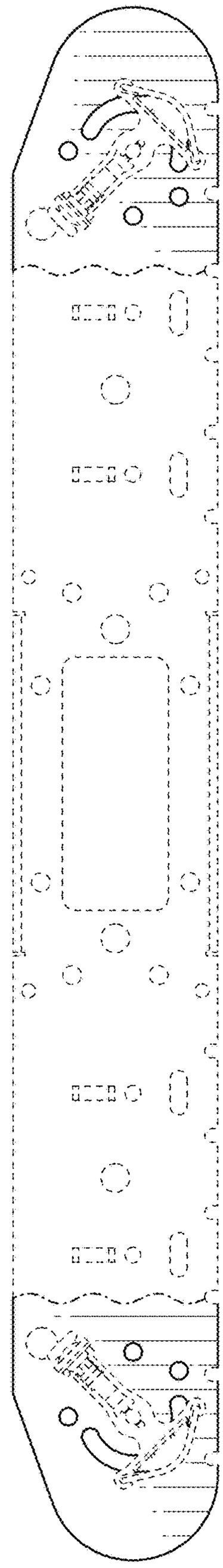

FIG. 20

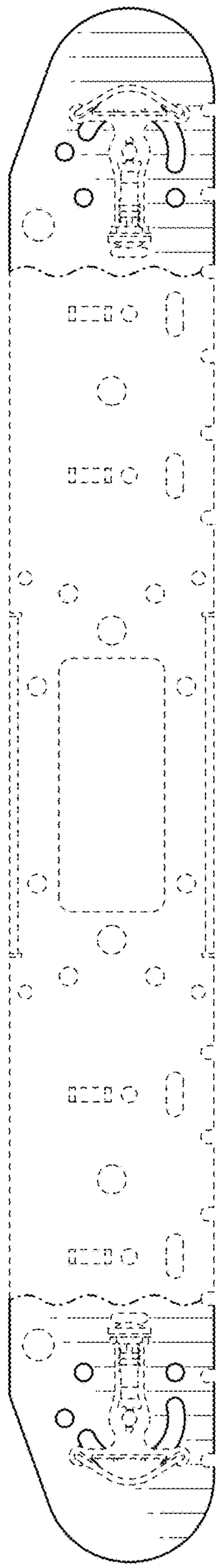

FIG. 21

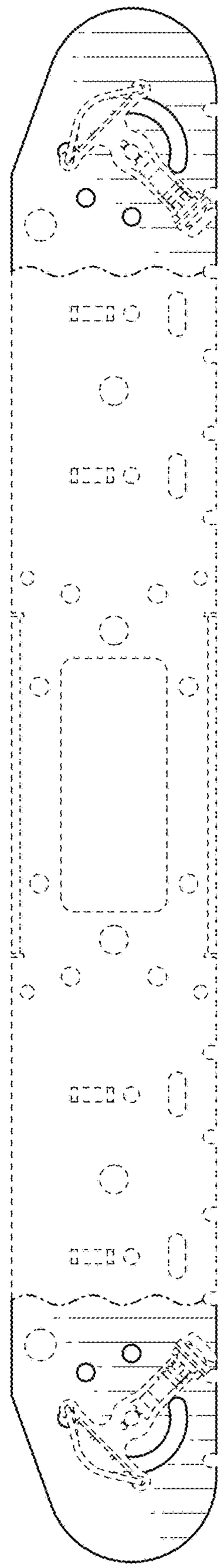

FIG. 22