US00D832837S

(12) United States Design Patent

Pennington, Jr. et al.

(10) Patent No.: US D832,837 S
(45) Date of Patent: ** Nov. 6, 2018

(54) **COMPUTER**

(71) Applicant: **Hewlett-Packard Development Company, L.P.**, Houston, TX (US)

(72) Inventors: **John William Pennington, Jr.**, Palo Alto, CA (US); **Daniel Yoon**, Palo Alto, CA (US); **Ivy Tseng**, Palo Alto, CA (US); **Insun Hong**, Houston, TX (US); **Glenn A. Wong**, Redwood City, CA (US); **Kevin L. Massaro**, Houston, TX (US)

(73) Assignee: **Hewlett-Packard Development Company, L.P.**, Houston, TX (US)

(**) Term: **15 Years**

(21) Appl. No.: **29/612,524**

(22) Filed: **Aug. 1, 2017**

(51) **LOC (11) Cl.** **14-02**

(52) **U.S. Cl.**
USPC **D14/348**; D14/344

(58) **Field of Classification Search**
USPC D14/240, 300, 301, 314, 308, 344, D14/348–356, 364–368, 188; D13/123, D13/158, 162, 184, 199; 312/223.1–223.3, 351.11; 360/99.01–99.12; 369/34.01–36.01; 361/679.31–679.33, 679.37, 679.39, 361/679.46, 679.53, 679.4, 679.41, 727
CPC . G06F 1/20; G06F 1/181; G06F 1/187; G06F 1/183; G06F 1/184; G06F 1/16; H05K 7/16; H05K 7/1424; H05K 7/1409; H05K 7/20; H05K 7/20545; H05K 7/20727; H05K 7/1425; H05K 7/1488; H05K 7/183; H05K 7/14; H05K 5/00; H05K 7/00; H05H 7/20; G11B 33/126; G11B 33/128; G11B 33/08; G11B 33/02; A45C 3/00; A45C 7/00; A45C 9/00; B65D 85/00; B65D 69/00
See application file for complete search history.

(56) **References Cited**

U.S. PATENT DOCUMENTS

D455,746 S * 4/2002 Ronzani D14/344
6,529,372 B1 * 3/2003 Ng G06F 1/163 312/223.2

(Continued)

OTHER PUBLICATIONS

https://www.theverge.com/circuitbreaker/2017/6/6/15744586/hp-omen-x-compact-desktop-virtual-reality-backpack-pc; dated Jun. 6, 2017, 5 pages.

Primary Examiner — Freda S Nunn
(74) *Attorney, Agent, or Firm* — Morgan Lewis & Bockius

(57) **CLAIM**

The ornamental design for a computer, as shown and described.

DESCRIPTION

FIG. **1** is a bottom, front, right perspective view of a computer in accordance to our new design;
FIG. **2** is a front elevational view of the computer shown in FIG. **1**;
FIG. **3** is a rear elevational view of the computer shown in FIG. **1**;
FIG. **4** is a left-side elevational view of the computer shown in FIG. **1**;
FIG. **5** is a right-side elevational view of the computer shown in FIG. **1**;
FIG. **6** is a top plan view of the computer shown in FIG. **1**;
FIG. **7** is a bottom plan view of the computer shown in FIG. **1**;
FIG. **8** is an enlarged detail view of a portion of FIG. **4**; and,
FIG. **9** is an enlarged detail view of a portion of FIG. **5**.
The broken lines shown in the drawings form no part of the claimed design.

1 Claim, 9 Drawing Sheets

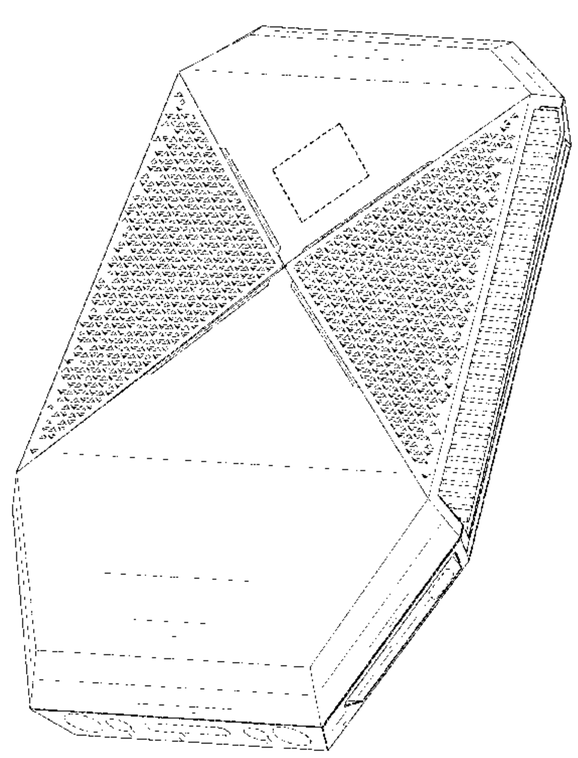

(56) **References Cited**

U.S. PATENT DOCUMENTS

6,843,012	B1 *	1/2005	Dodd	G09F 21/02 224/627
7,265,970	B2 *	9/2007	Jordan	G09F 21/02 361/679.27
8,896,992	B2 *	11/2014	Sherlock	G06F 1/163 361/679.03
2006/0113203	A1 *	6/2006	Daley	A45C 5/02 206/320
2008/0043416	A1 *	2/2008	Narayan	G06F 1/163 361/679.03
2009/0284908	A1 *	11/2009	Daley, III	G06F 1/1628 361/679.17

* cited by examiner

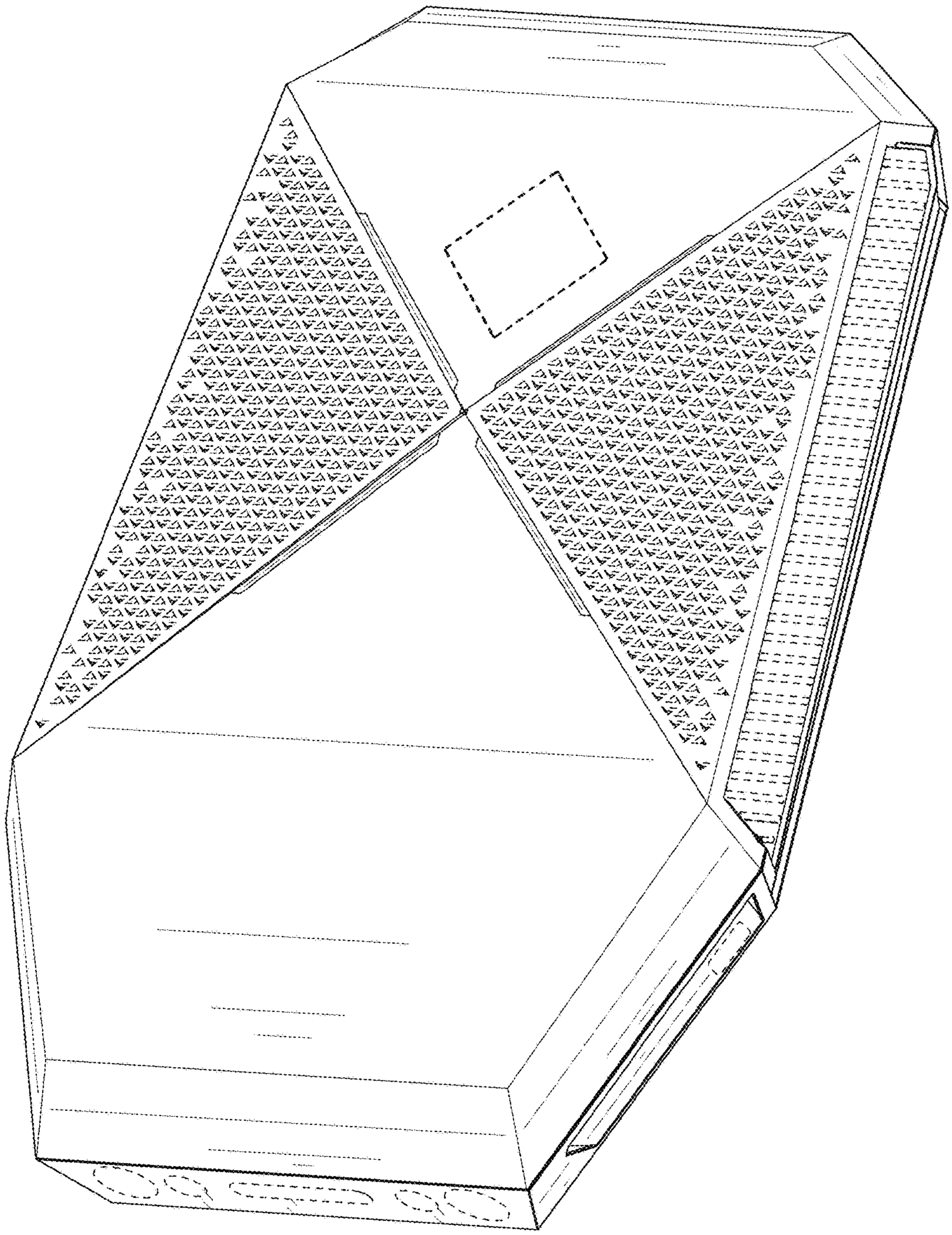

FIG. 1

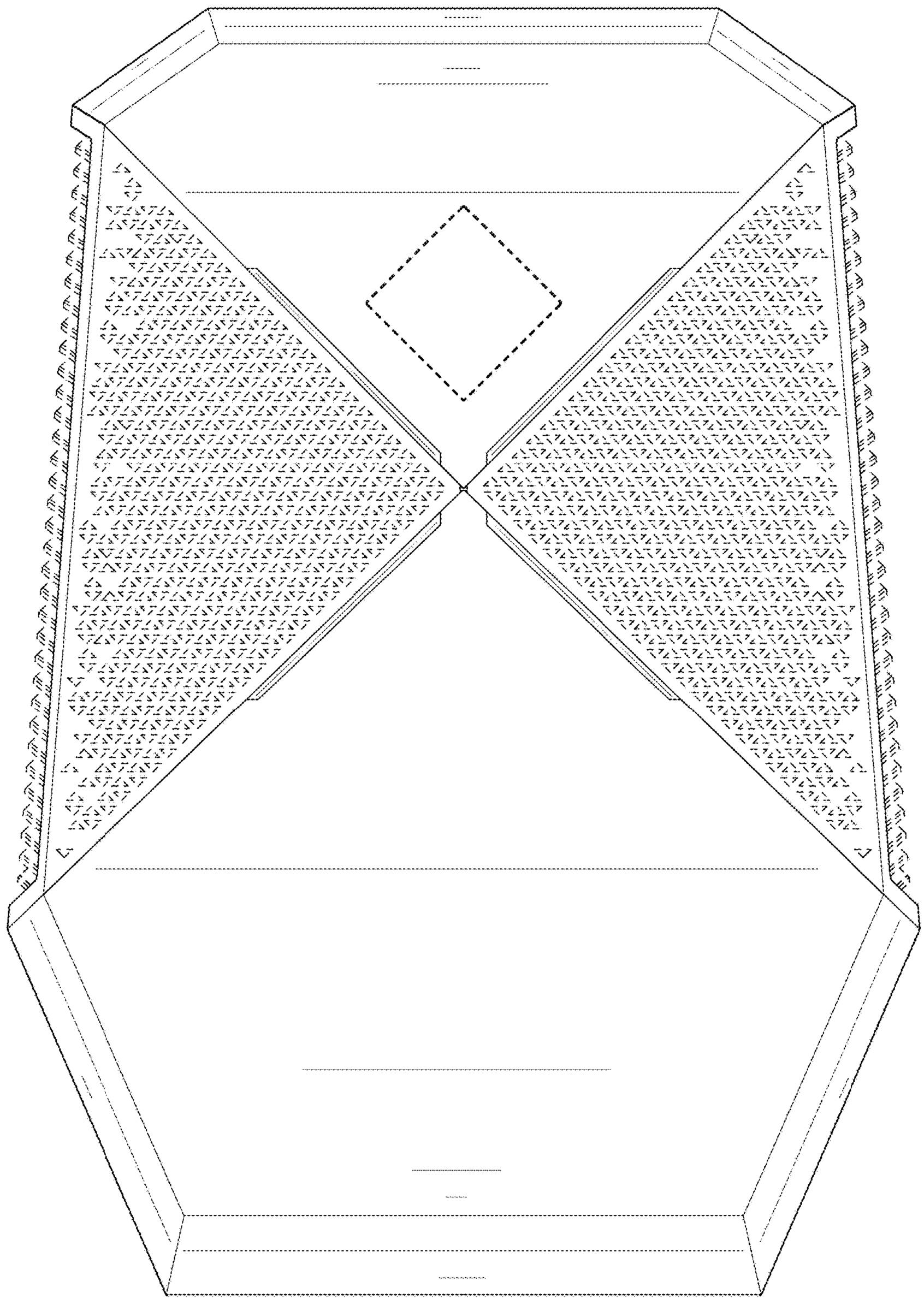

FIG. 2

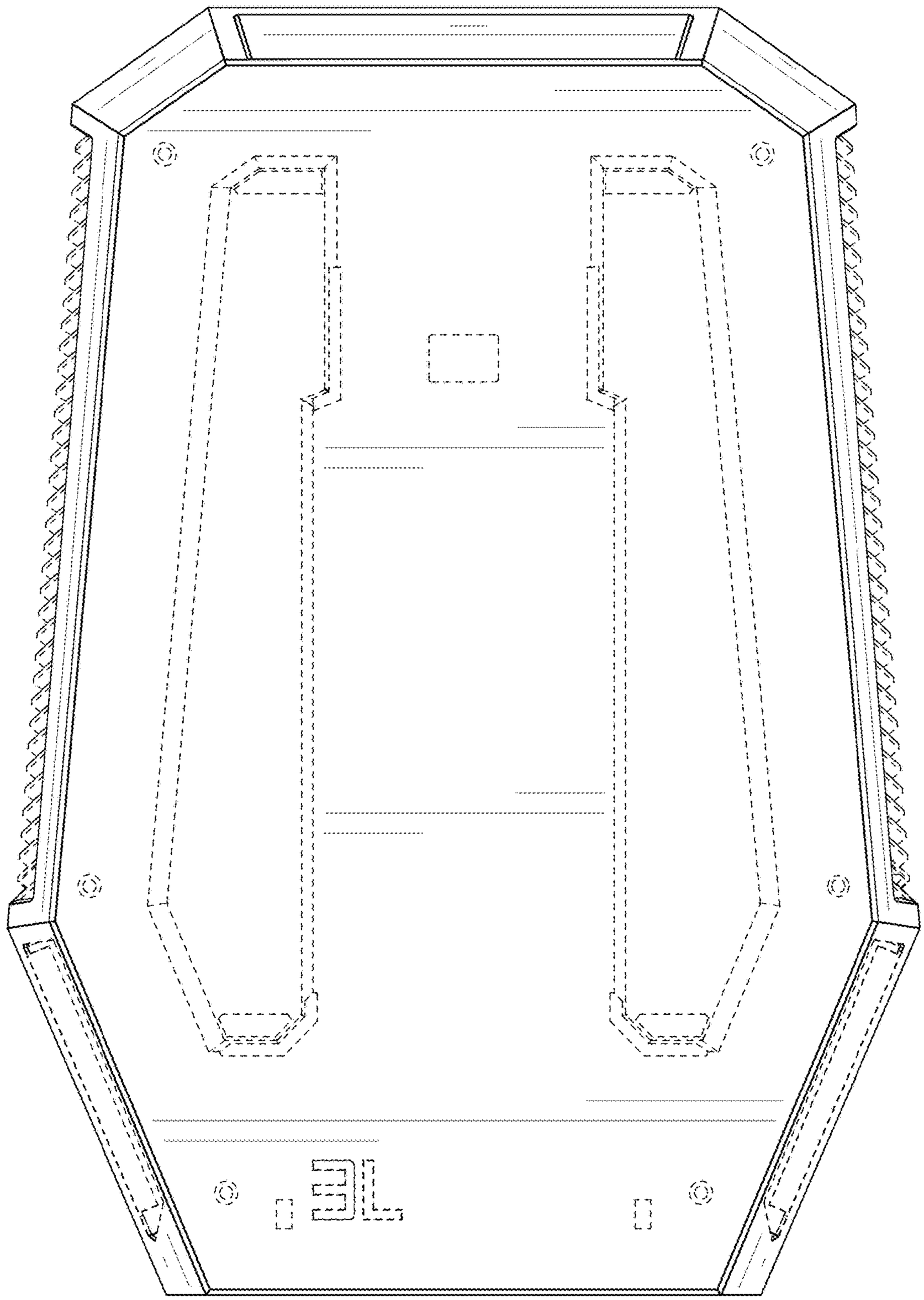

FIG. 3

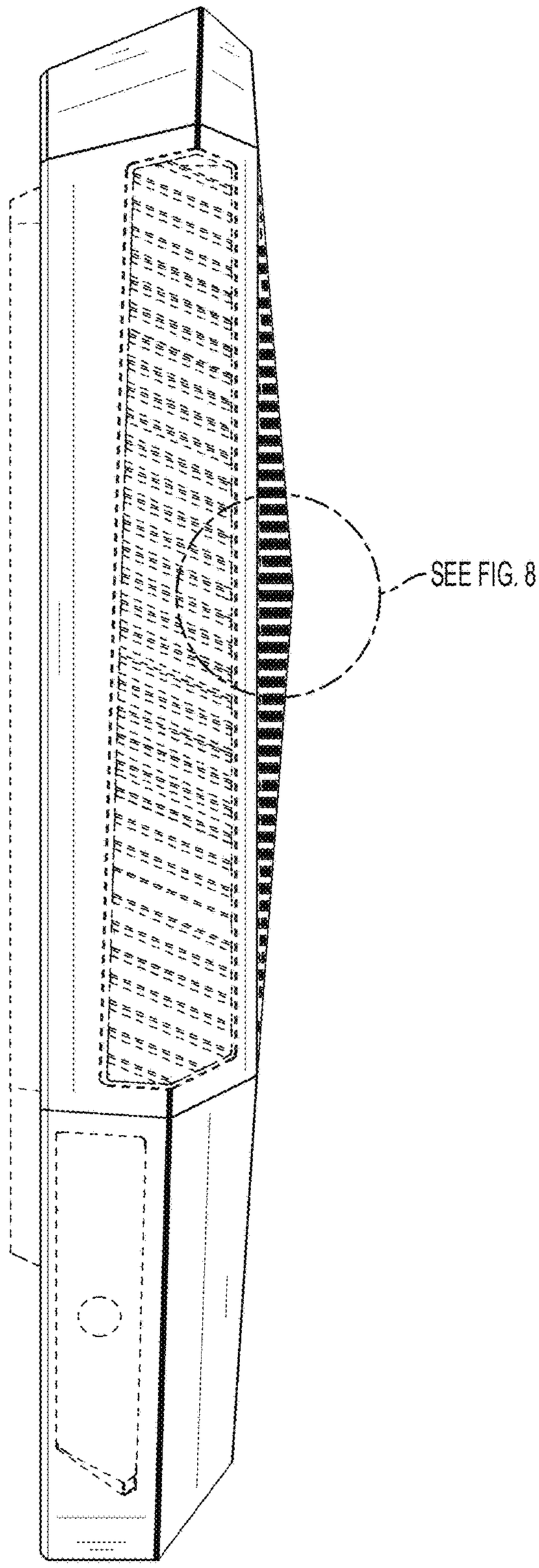

FIG. 4

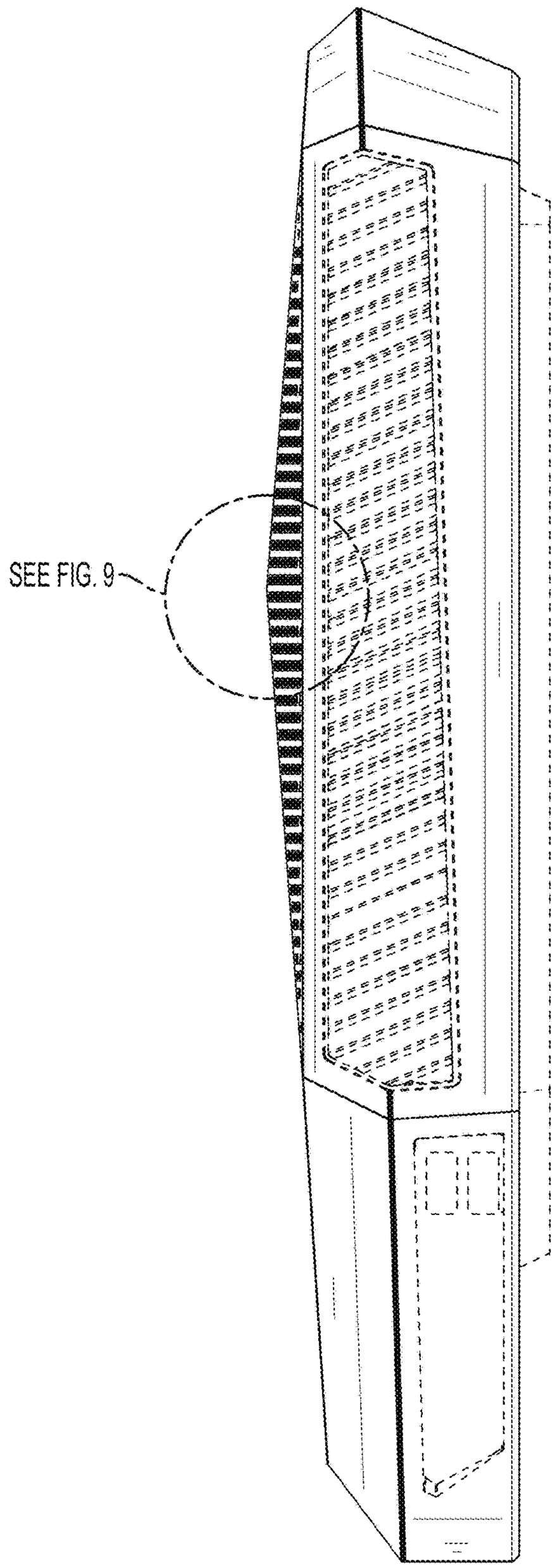

FIG. 5

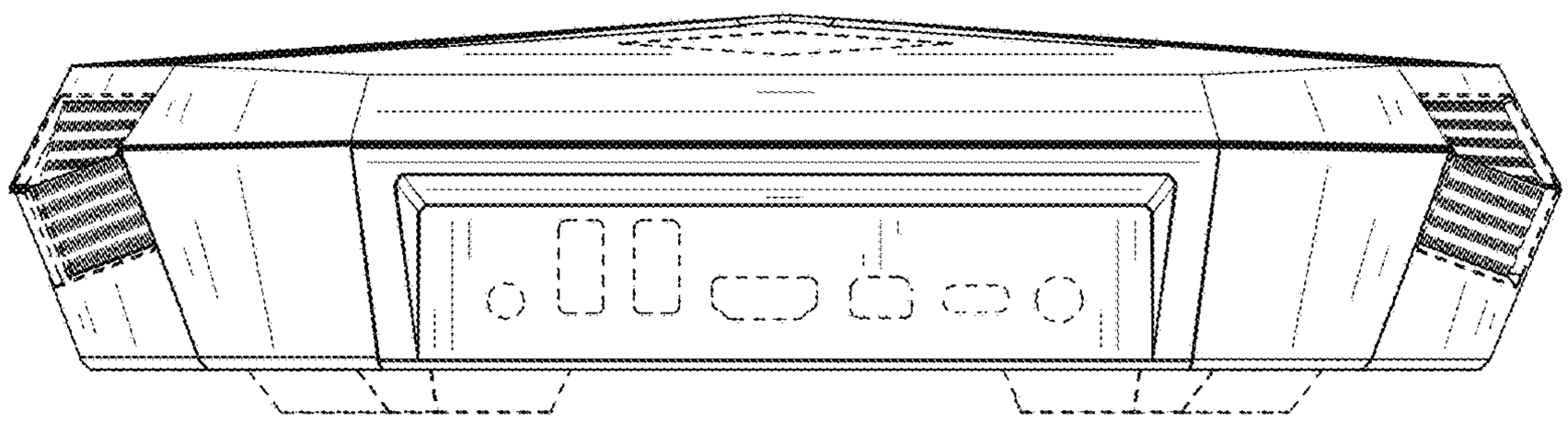

FIG. 6

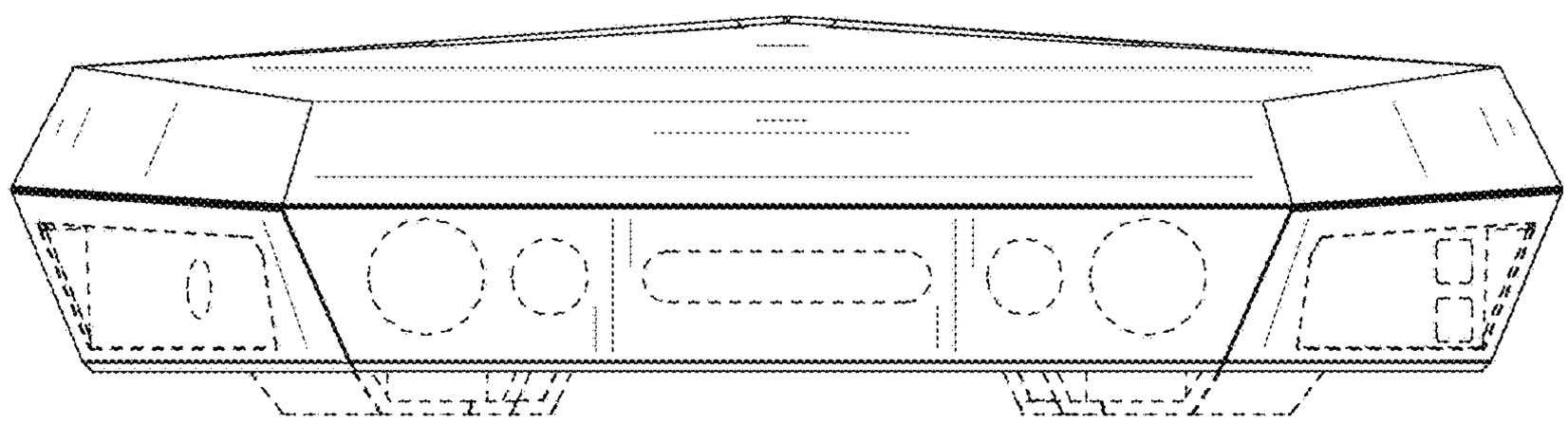

FIG. 7

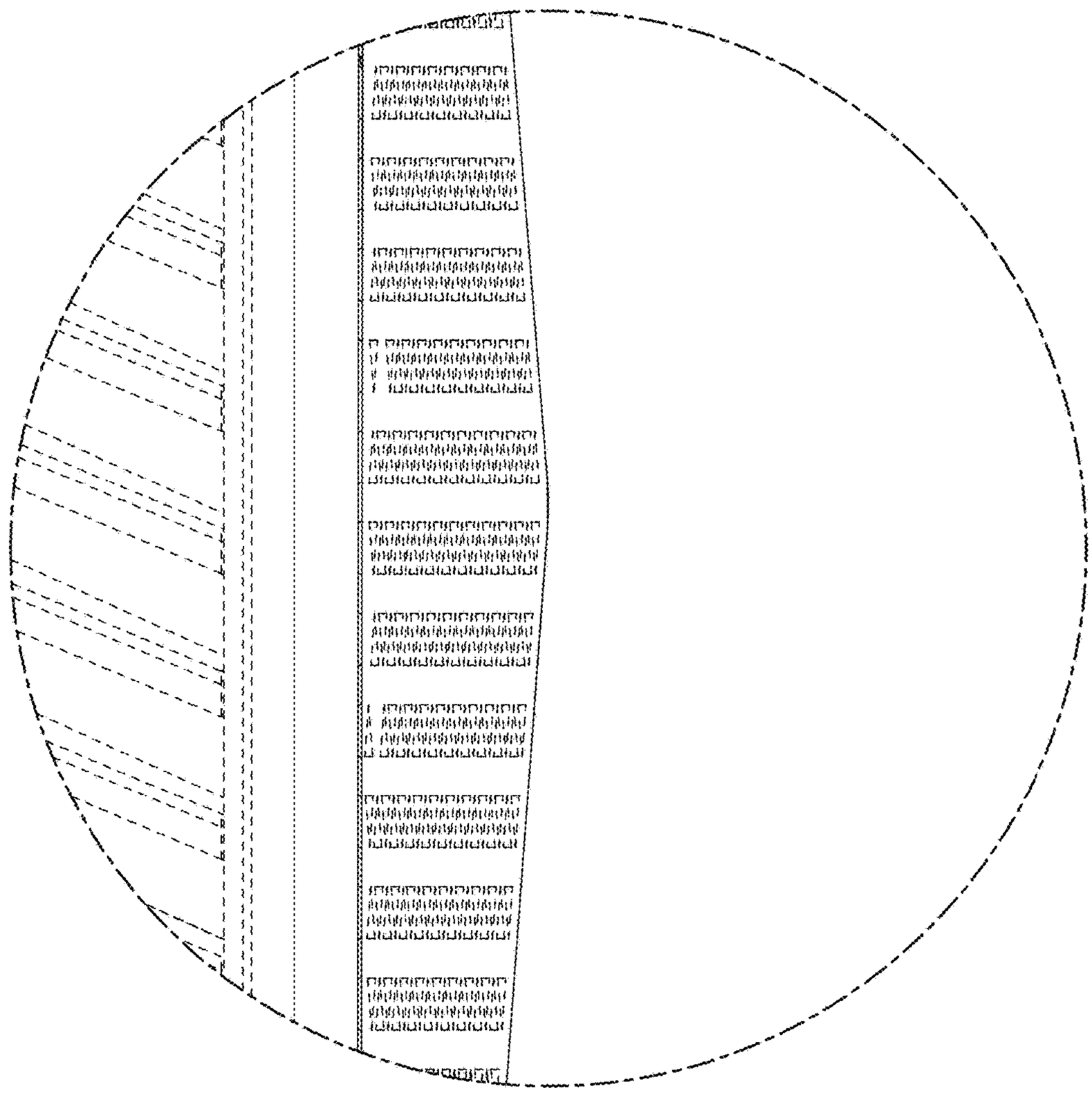

FIG. 8

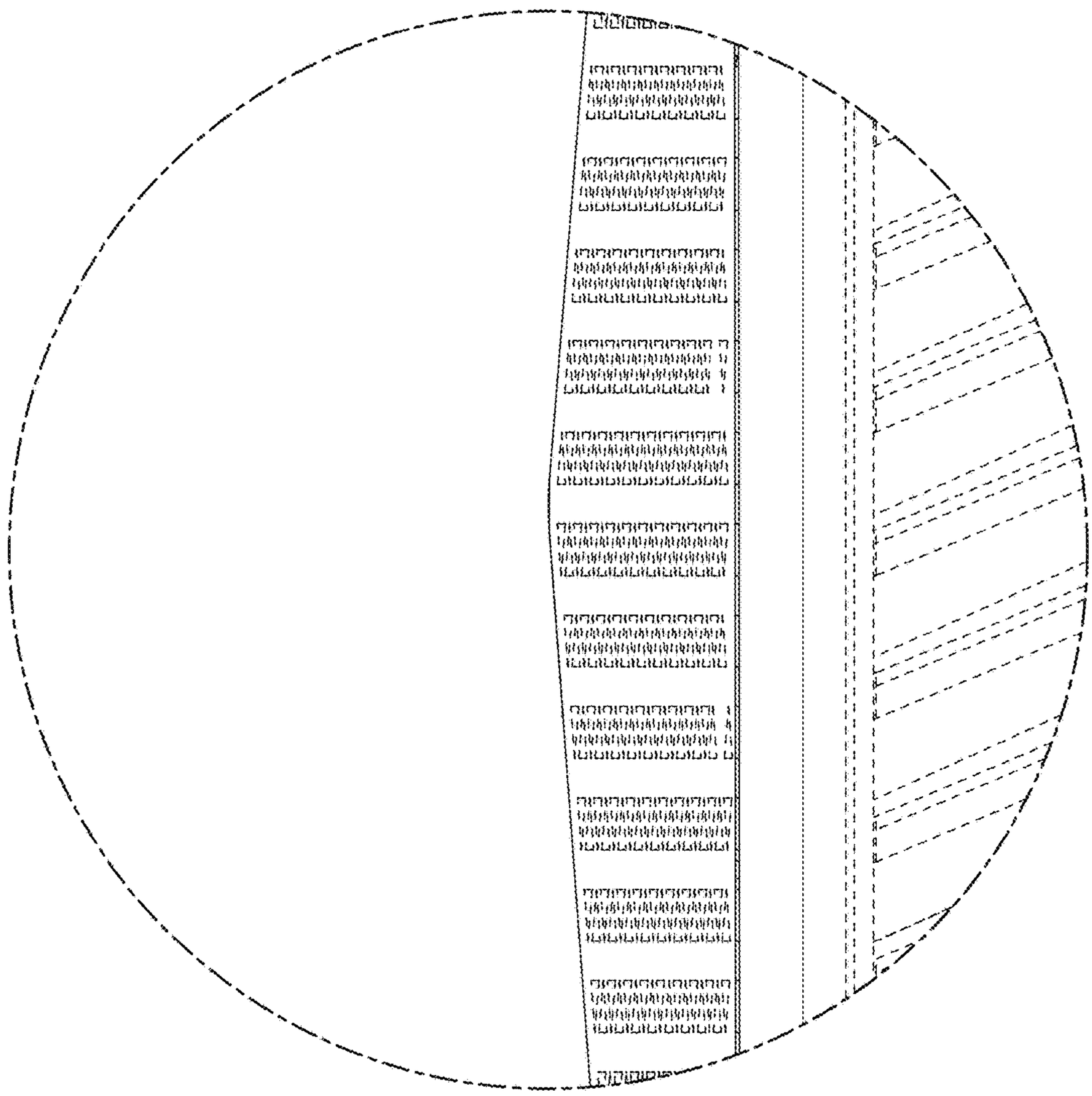

FIG. 9