US00D832811S

(12) United States Design Patent

Levine et al.

(10) Patent No.: US D832,811 S
(45) Date of Patent: ** Nov. 6, 2018

(54) **EARPIECE ATTACHMENT PORTION OF HEADPHONE DEVICE**

(71) Applicant: **New Audio LLC**, New York, NY (US)

(72) Inventors: **Jonathan E. Levine**, New York, NY (US); **Drew S. Briggs**, Brooklyn, NY (US); **Marten Andersson**, Malmo (SE); **Thomas C. Wilson**, Brooklyn, NY (US)

(73) Assignee: **New Audio LLC**, New York, NY (US)

(**) Term: **15 Years**

(21) Appl. No.: **29/596,857**

(22) Filed: **Mar. 10, 2017**

Related U.S. Application Data

(62) Division of application No. 29/535,635, filed on Aug. 7, 2015, now Pat. No. Des. 781,265.

(51) **LOC (11) Cl.** **14-01**

(52) **U.S. Cl.**
USPC **D14/205**

(58) **Field of Classification Search**
USPC D14/205, 223, 188, 192; D29/112; 2/209; 181/129, 130, 135; 379/430, 431; 381/380, 381, 370, 375, 374, 378, 379, 381/330; 455/90.3, 575.1, 569.1
CPC H04R 1/1066; H04R 1/1016; H04R 5/033; H04R 5/0335; H04R 25/00; H04R 25/02; H04R 1/105; H04R 1/1058
See application file for complete search history.

(56) **References Cited**

U.S. PATENT DOCUMENTS

1,127,161 A * 2/1915 Baldwin H04R 5/0335 381/379
1,289,826 A * 12/1918 Lawton H04R 5/0335 381/379
1,367,746 A 2/1921 Kent
1,483,315 A * 2/1924 Saal H04R 1/1066 381/374
1,489,978 A * 4/1924 Byron H04R 1/1008 128/866
1,587,409 A * 6/1926 Ouillette H04R 1/10 381/374
1,649,551 A * 11/1927 Smith H04R 1/1066 381/374
2,235,372 A * 3/1941 Kalbitz H04R 1/1066 381/371
2,394,374 A * 2/1946 Gilman H04R 1/1066 381/189

(Continued)

OTHER PUBLICATIONS

U.S. Appl. No. 15/853,395, filed Dec. 22, 2017, Levine, Jonathan E. et al.

(Continued)

Primary Examiner — Paula Allen Greene
(74) *Attorney, Agent, or Firm* — Perkins Coie LLP

(57) **CLAIM**

The ornamental design for an earpiece attachment portion of a headphone device, as shown and described.

DESCRIPTION

FIG. **1** is a perspective view of an earpiece attachment portion of a headphone device showing our new design.
FIG. **2** is a front elevational view thereof.
FIG. **3** is a back elevational view thereof.
FIG. **4** is a first side elevational view thereof.
FIG. **5** is a second side elevational view thereof.
FIG. **6** is a top plan view thereof; and,
FIG. **7** is a bottom plan view thereof.
The broken lines depict environment that forms no part of the claimed design.

1 Claim, 5 Drawing Sheets

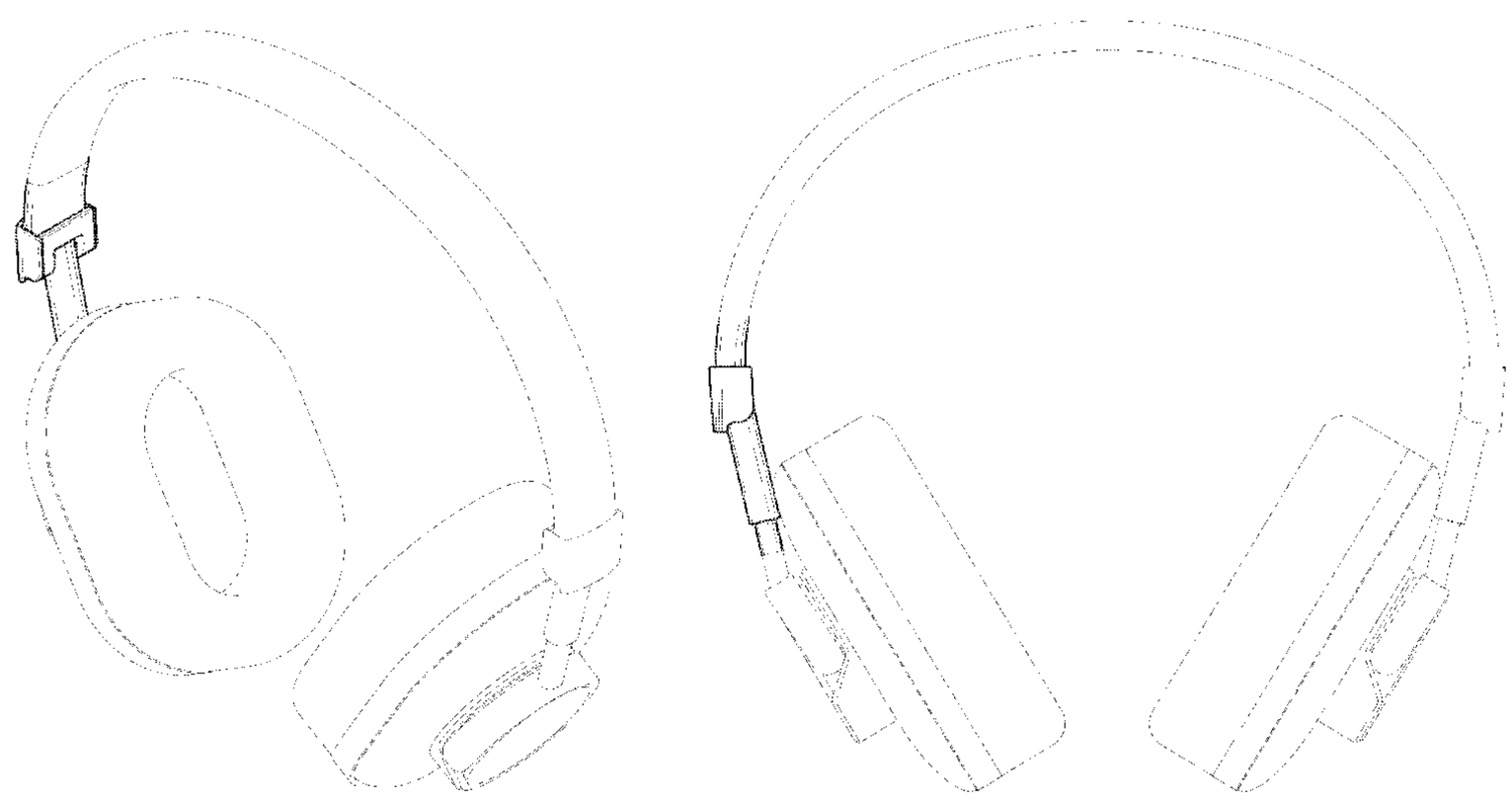

(56) **References Cited**

U.S. PATENT DOCUMENTS

2,413,345	A	*	12/1946	Gilman	H04R 1/1066 381/379
2,486,267	A	*	10/1949	Dulinsky	H04R 5/0335 381/377
2,510,344	A		6/1950	Law	
3,922,725	A		12/1975	Csiki	
4,472,607	A	*	9/1984	Houng	H04M 1/05 181/18
4,829,571	A	*	5/1989	Kakiuchi	H04R 1/1033 381/309
5,035,005	A		7/1991	Hung	
5,293,647	A	*	3/1994	Mirmilshteyn	H04R 1/10 2/209
5,438,626	A		8/1995	Neuman	
5,457,751	A	*	10/1995	Such	H04M 1/05 348/115
5,729,615	A	*	3/1998	Yang	H04R 1/1066 181/129
5,862,241	A	*	1/1999	Nelson	H04R 1/105 381/374
D410,466	S		6/1999	Mouri et al.	
D424,150	S	*	5/2000	Post	D21/771
D431,550	S	*	10/2000	Yoneda	D14/205
6,427,018	B1	*	7/2002	Keliiliki	H04R 1/1066 381/370
6,654,966	B2	*	12/2003	Rolla	H04R 1/1066 2/209
D512,708	S	*	12/2005	Harris, Jr.	D14/205
D514,087	S	*	1/2006	Wilson	D14/206
D538,261	S	*	3/2007	Taylor	D14/205
D573,581	S	*	7/2008	Gondo	D14/205
D600,674	S	*	9/2009	Brennwald	D14/205
D633,367	S	*	3/2011	Scherr	D8/331
D633,895	S	*	3/2011	Morimoto	D14/205
8,325,962	B2		12/2012	Ishida	
8,737,668	B1		5/2014	Blair	
8,755,555	B2	*	6/2014	Dougherty	H04R 1/1066 381/370
D727,280	S	*	4/2015	Levine	D14/205
D727,281	S	*	4/2015	Levine	D14/205
D736,174	S	*	8/2015	Levine	D14/205
D736,175	S	*	8/2015	Levine	D14/205
D736,185	S	*	8/2015	Yaegashi	D14/223
D741,842	S	*	10/2015	Levine	D14/226
D762,190	S	*	7/2016	Levine	D14/205
D762,191	S		7/2016	Levine	
D772,841	S		11/2016	Levine	
D780,155	S		2/2017	Levine et al.	
D781,265	S	*	3/2017	Levine	D14/205
D781,814	S		3/2017	Levine	
9,729,954	B2		8/2017	Levine et al.	
D805,056	S	*	12/2017	Levine	D14/205
D810,055	S		2/2018	Levine	
D812,588	S		3/2018	Levine	
2008/0056525	A1		3/2008	Fujiwara et al.	
2010/0177907	A1		7/2010	Morisawa	
2012/0070028	A1		3/2012	Margulies	
2017/0041697	A1	*	2/2017	Levine	H04R 1/1033
2017/0134845	A1		5/2017	Milam et al.	
2017/0339479	A1		11/2017	Levine	
2018/0020277	A1		1/2018	Briggs	
2018/0020278	A1		1/2018	Levine et al.	

OTHER PUBLICATIONS

U.S. Appl. No. 29/594,131, filed Feb. 15, 2017, Levine, Jonathan E. et al.
U.S. Appl. No. 29/599,322, filed Mar. 31, 2017, Levine, Jonathan E. et al.
U.S. Appl. No. 29/599,994, filed Apr. 7, 2017, Levine, Jonathan E. et al.
U.S. Appl. No. 29/628,837, filed Dec. 7, 2017, Levine, Jonathan E.
U.S. Appl. No. 29/632,542, filed Jan. 8, 2018, Drew Stone Briggs et al.
U.S. Appl. No. 29/636,718, filed Feb. 9, 2018, Levine, Jonathan E.
U.S. Appl. No. 29/596,857, filed Mar. 10, 2017, Levine, Jonathan E. et al.
U.S. Appl. No. 29/636,714, filed Feb. 9, 2018, Levine, Jonathan E.

* cited by examiner

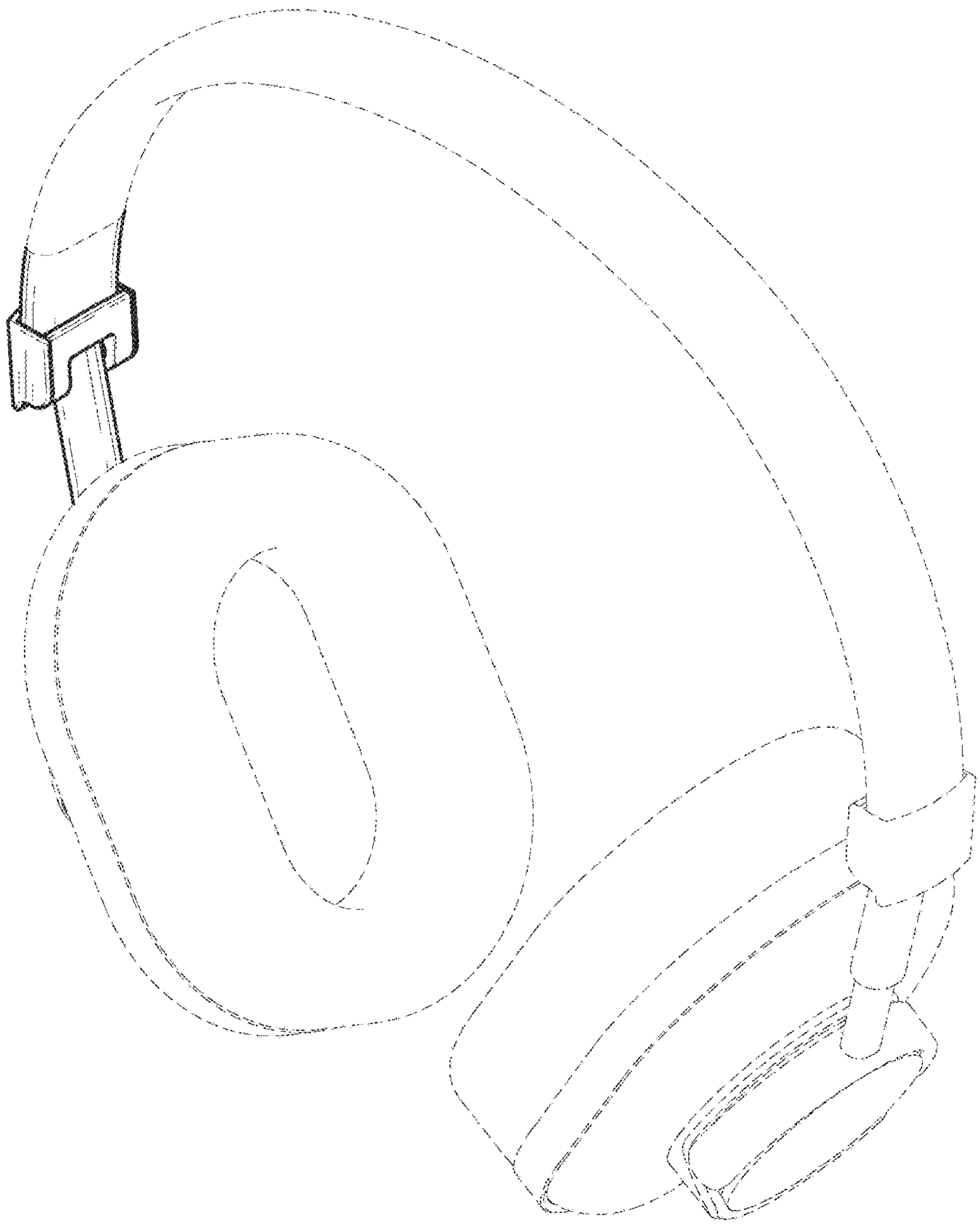

Fig. 1

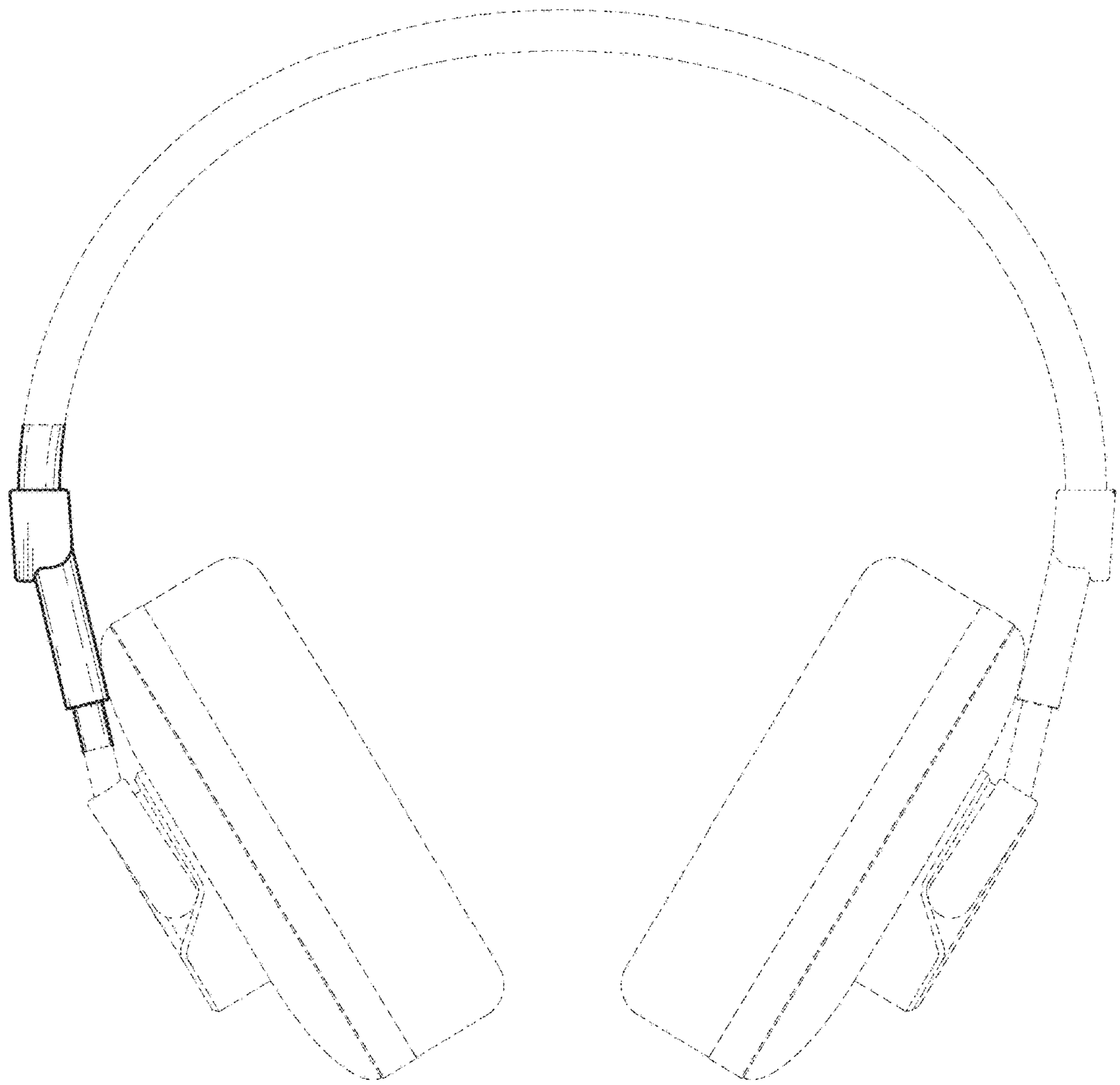

Fig. 2

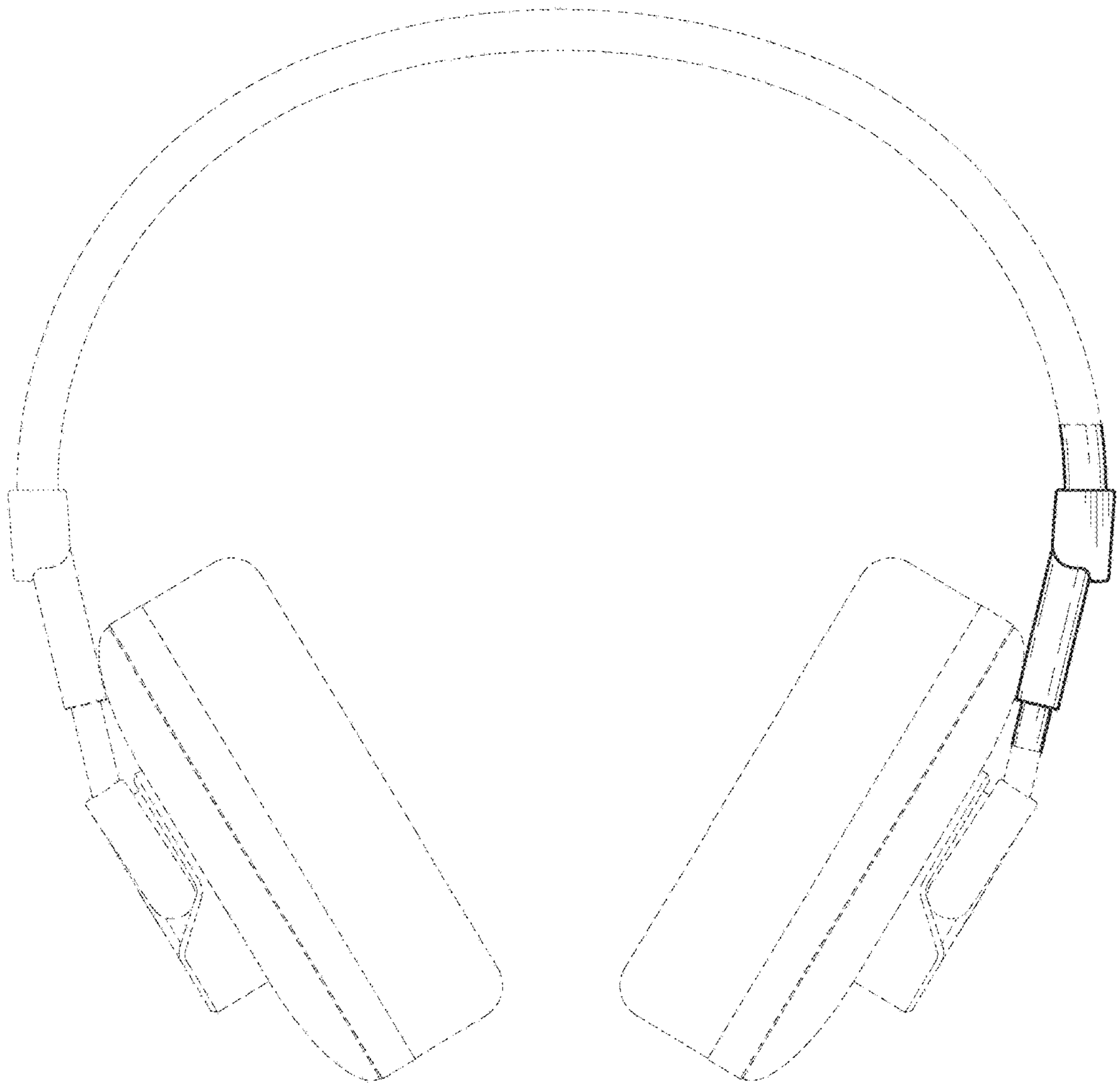

Fig. 3

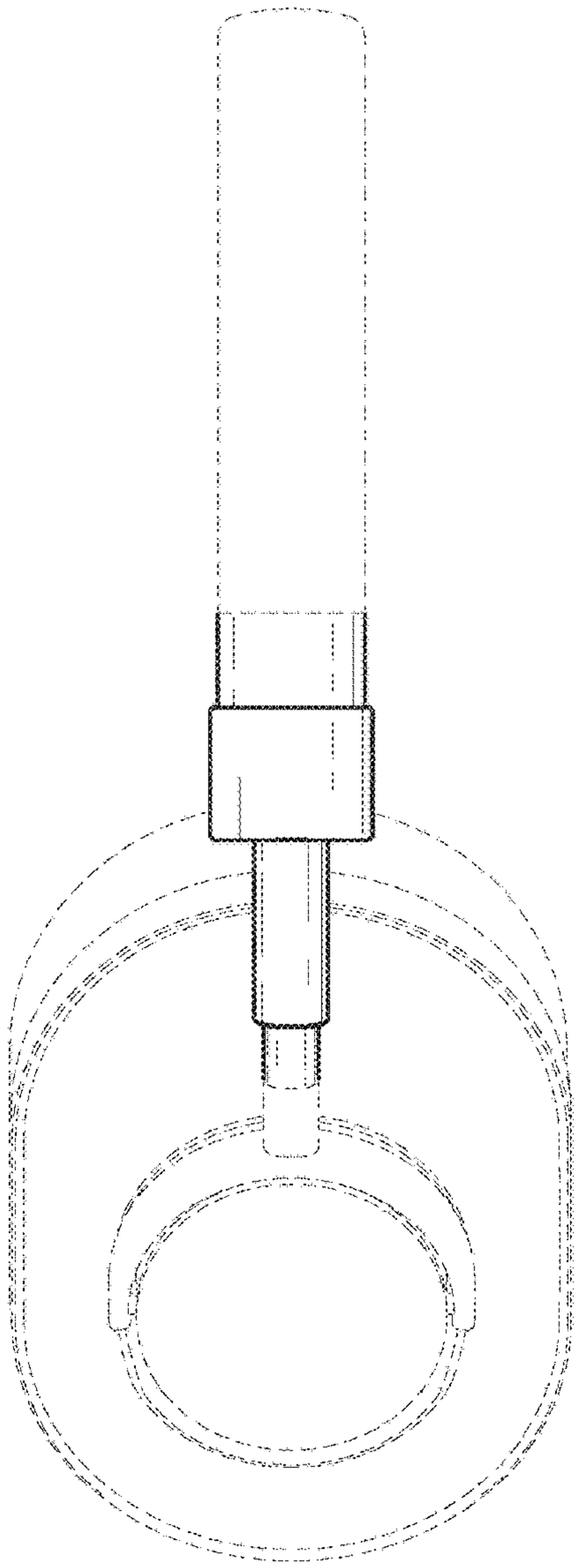

Fig. 4

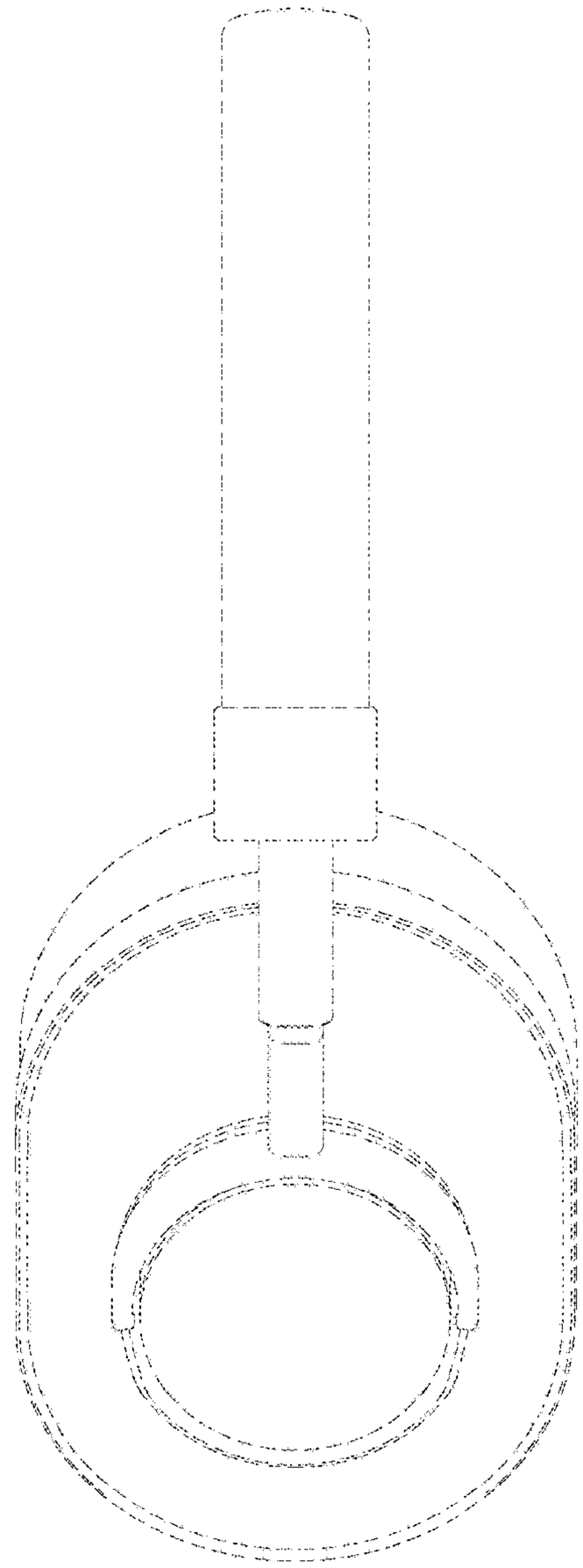

Fig. 5

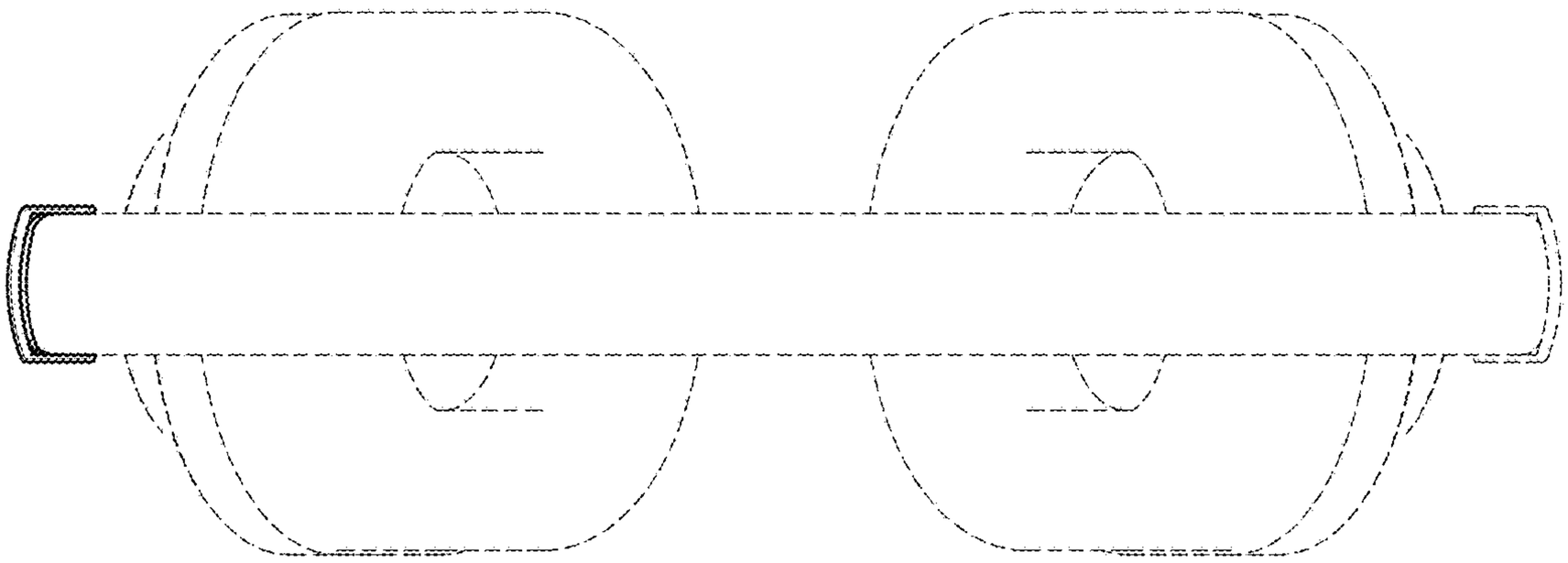

Fig. 6

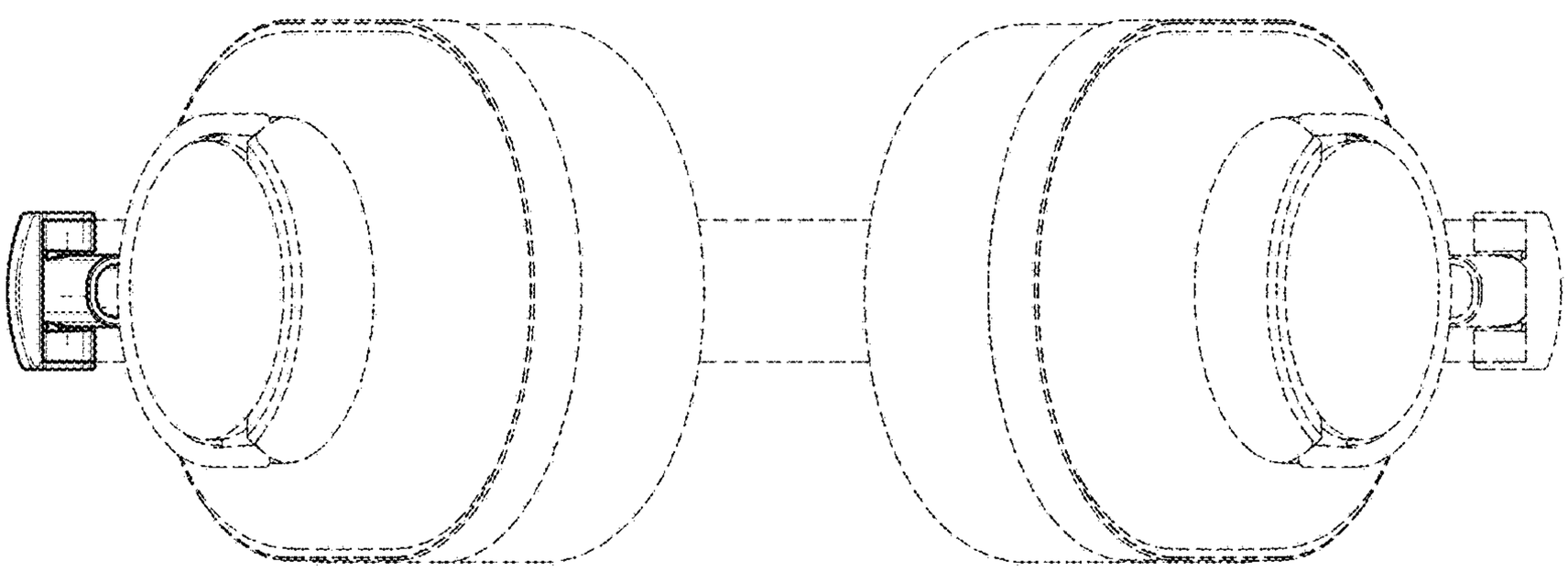

Fig. 7