US00D832328S

(12) United States Design Patent

Baek et al.

(10) Patent No.: US D832,328 S
(45) Date of Patent: ** Oct. 30, 2018

(54) **ROBOTIC DEVICE**

(71) Applicants: **Samsung Electronics Co., Ltd.**, Suwon-si (KR); **Cornell University**, Ithaca, NY (US)

(72) Inventors: **Joonhye Baek**, Seoul (KR); **Gulji Chung**, Seoul (KR); **Heejae Choi**, Seoul (KR); **Guy Hoffman**, Ithaca, NY (US)

(73) Assignees: **Samsung Electronics Co., Ltd.**, Suwon-si (KR); **Cornell University**, Ithaca, NY (US)

(**) Term: **15 Years**

(21) Appl. No.: **29/607,644**

(22) Filed: **Jun. 15, 2017**

(30) **Foreign Application Priority Data**

Dec. 16, 2016 (KR) 30-2016-0061486

(51) **LOC (11) Cl.** **15-99**

(52) **U.S. Cl.**
USPC **D15/199**

(58) **Field of Classification Search**
USPC D32/21–24, 31, 34, 17–18; 700/259; D15/199; D21/578–579

(Continued)

(56) **References Cited**

U.S. PATENT DOCUMENTS

6,856,113 B1 * 2/2005 Cunningham A47L 5/38 15/314
7,228,203 B2 * 6/2007 Koselka B25J 5/007 318/568.12

(Continued)

FOREIGN PATENT DOCUMENTS

CN 2015303083730 1/2016
EM 002582064-0002 3/2015
EM 002926881-0001 1/2016

Primary Examiner — Ruth McInroy
(74) *Attorney, Agent, or Firm* — NSIP Law

(57) **CLAIM**

We claim the ornamental design for a robotic device, as shown and described.

DESCRIPTION

FIG. **1** is front view of a robotic device showing our new design;
FIG. **2** is a front elevational view thereof;
FIG. **3** is a rear elevational view thereof;
FIG. **4** is a left-side elevational view thereof;
FIG. **5** is a right-side elevational view thereof;
FIG. **6** is a top plan view thereof;
FIG. **7** is a bottom plan view thereof;
FIG. **8** is a front perspective view of a robotic device shown in a second position;
FIG. **9** is a front elevational view of FIG. **8**;
FIG. **10** is a rear elevational view of FIG. **8**;
FIG. **11** is a left-side elevational view of FIG. **8**;
FIG. **12** is a right-side elevational view of FIG. **8**;
FIG. **13** is a top plan view of FIG. **8**;
FIG. **14** is a bottom plan view of FIG. **8**;
FIG. **15** is a front perspective view of a robotic device shown in a third position;
FIG. **16** is a front elevational view of FIG. **15**;
FIG. **17** is a rear elevational view of FIG. **15**;
FIG. **18** is a left-side elevational view of FIG. **15**;
FIG. **19** is a right-side elevational view of FIG. **15**;
FIG. **20** is a top plan view of FIG. **15**;
FIG. **21** is a bottom plan view of FIG. **15**;
FIG. **22** is a front perspective view of a robotic device shown in a fourth position;
FIG. **23** is a front elevational view of FIG. **22**;
FIG. **24** is a rear elevational view of FIG. **22**;
FIG. **25** is a left-side elevational view of FIG. **22**;
FIG. **26** is a right-side elevational view of FIG. **22**;
FIG. **27** is a top plan view of FIG. **22**; and,
FIG. **28** is a bottom plan view of FIG. **22**.

(Continued)

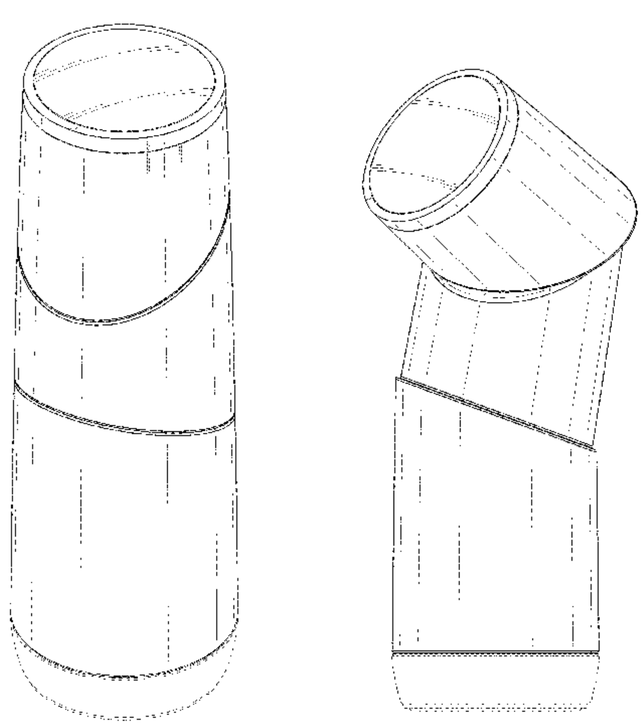

The details shown in broken lines form no part of the claimed design.

1 Claim, 28 Drawing Sheets

(58) **Field of Classification Search**
CPC A47L 5/24; A47L 5/22; A47L 5/28; A47L 5/225; A47L 5/362; A47L 5/365; A47L 9/2842; A47L 9/24; A47L 9/248; B25J 11/0005; B25J 9/0003
See application file for complete search history.

(56) **References Cited**

U.S. PATENT DOCUMENTS

D586,959	S	*	2/2009	Geringer	D32/21
D678,378	S	*	3/2013	Selic	D15/199
D686,789	S	*	7/2013	Bisson	D32/21
D692,041	S	*	10/2013	Selic	D15/199
D738,053	S	*	9/2015	Kim	D32/21
D746,886	S	*	1/2016	Breazeal	D15/199
D748,088	S	*	1/2016	Kidd	D14/307
D761,895	S	*	7/2016	Breazeal	D15/199
D762,029	S	*	7/2016	Marsden	D32/31
9,596,970	B2	*	3/2017	McCutchen	A47L 9/20
9,636,826	B2	*	5/2017	Liao	B25J 11/0005
D799,575	S	*	10/2017	Tang	D15/199
D802,040	S	*	11/2017	Canoso	D15/199
D811,458	S	*	2/2018	Wang	D15/199
D813,281	S	*	3/2018	Kittmann	D15/199
D813,284	S	*	3/2018	Wei	D15/199
D813,285	S	*	3/2018	Wei	D15/199
D814,542	S	*	4/2018	Iijima	D15/199
D817,374	S	*	5/2018	Liu	D15/199
D817,375	S	*	5/2018	Deyle	D15/199
D820,334	S	*	6/2018	Lee	D15/199
2014/0277735	A1	*	9/2014	Breazeal	B25J 11/0005 700/259

* cited by examiner

FIG. 1

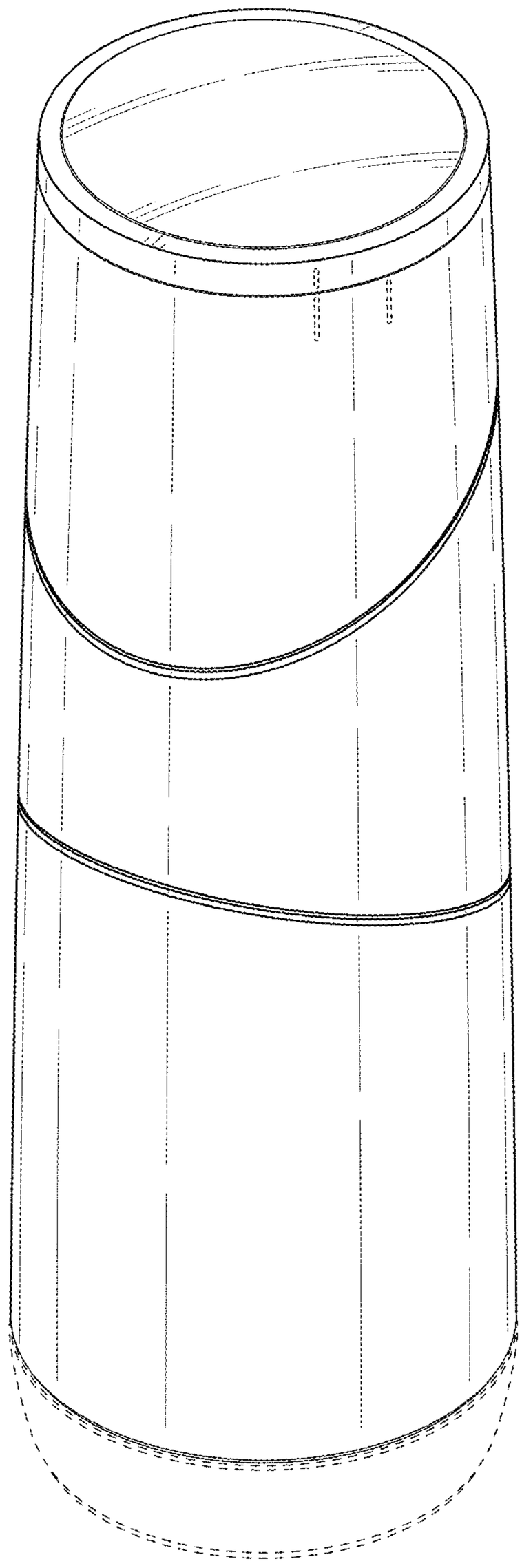

FIG. 2

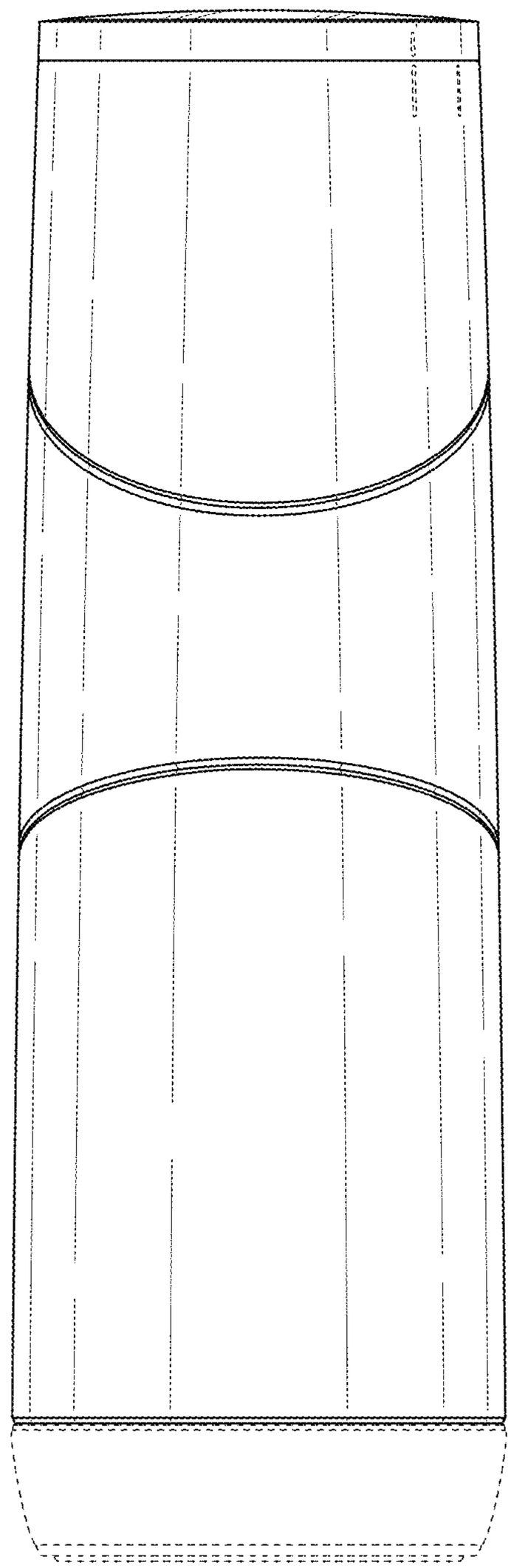

FIG. 3

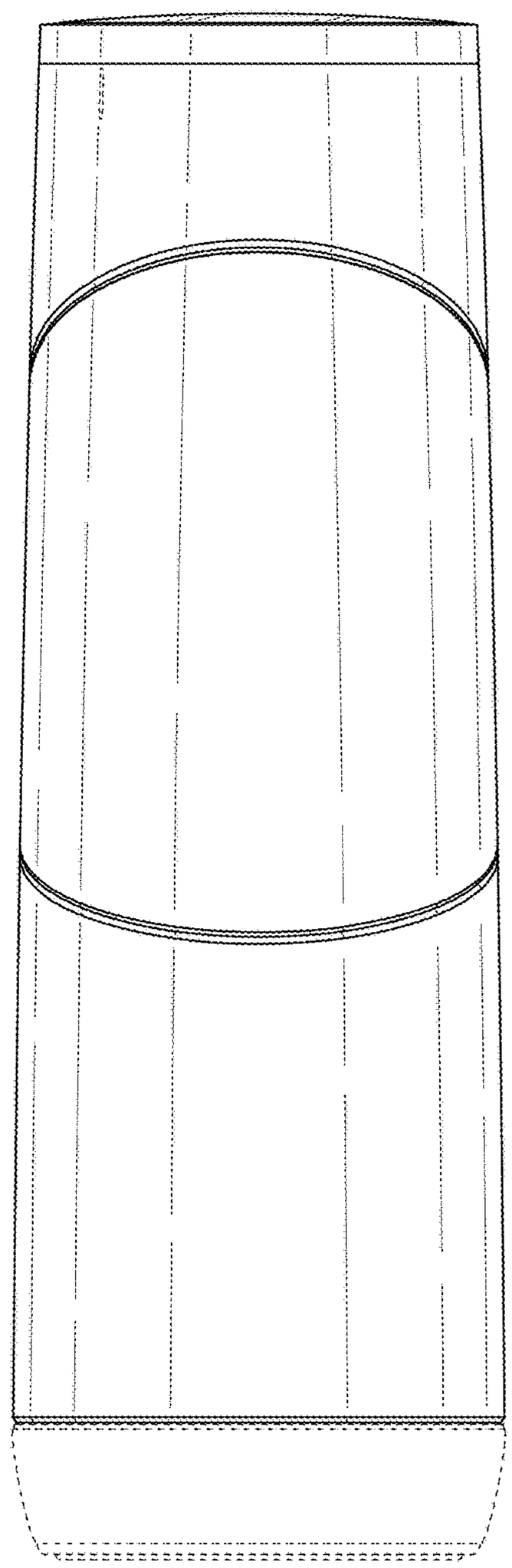

FIG. 4

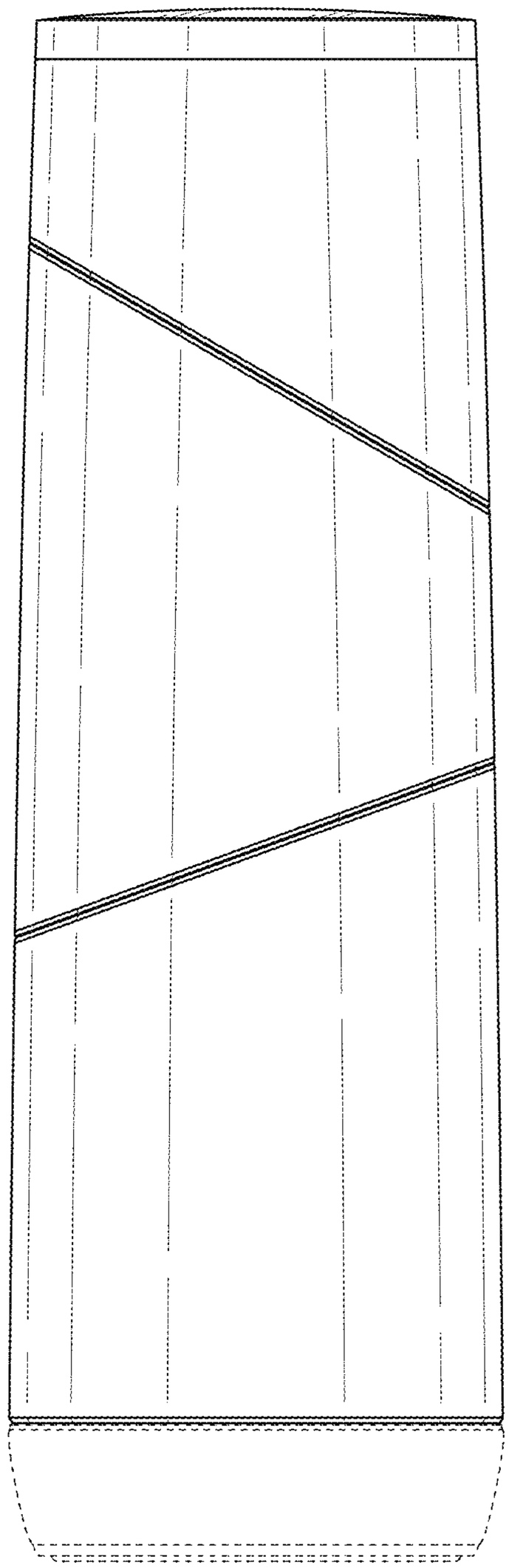

FIG. 5

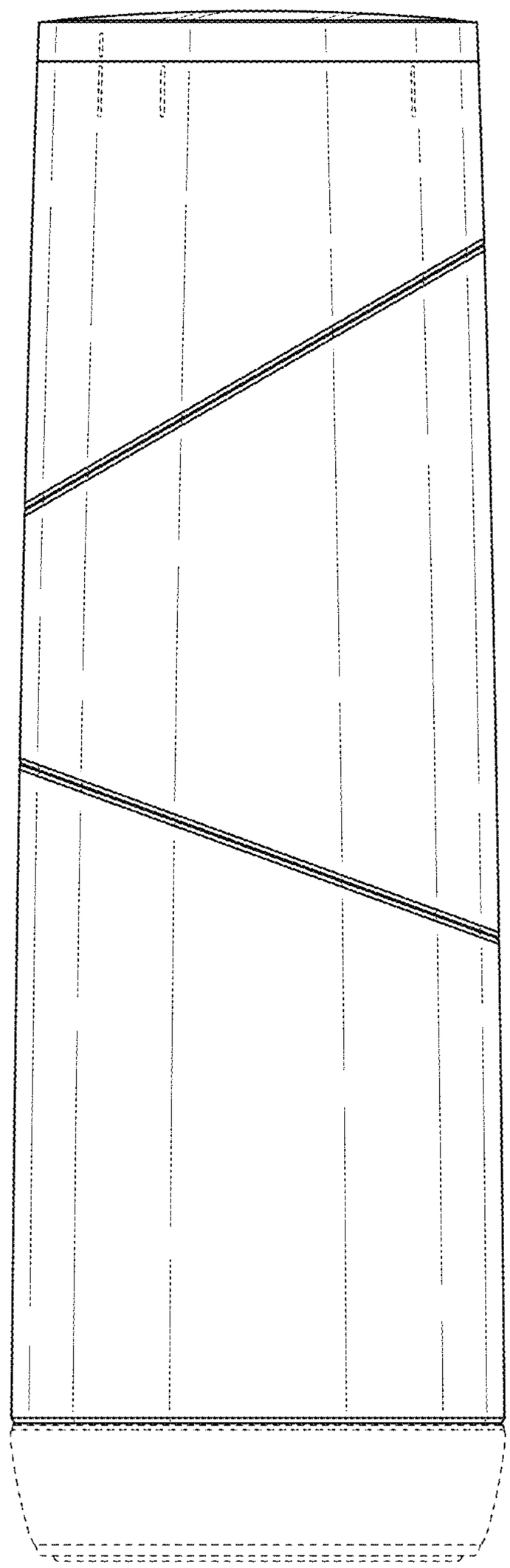

FIG. 6

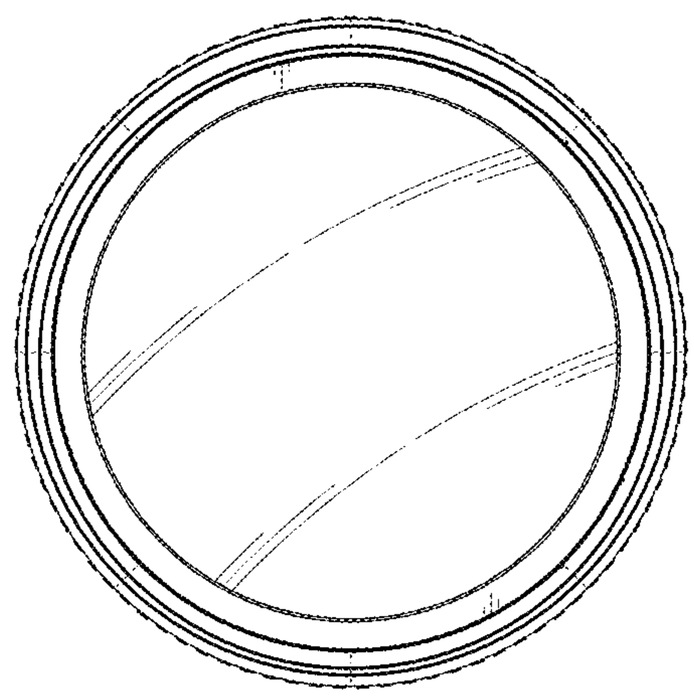

FIG. 7

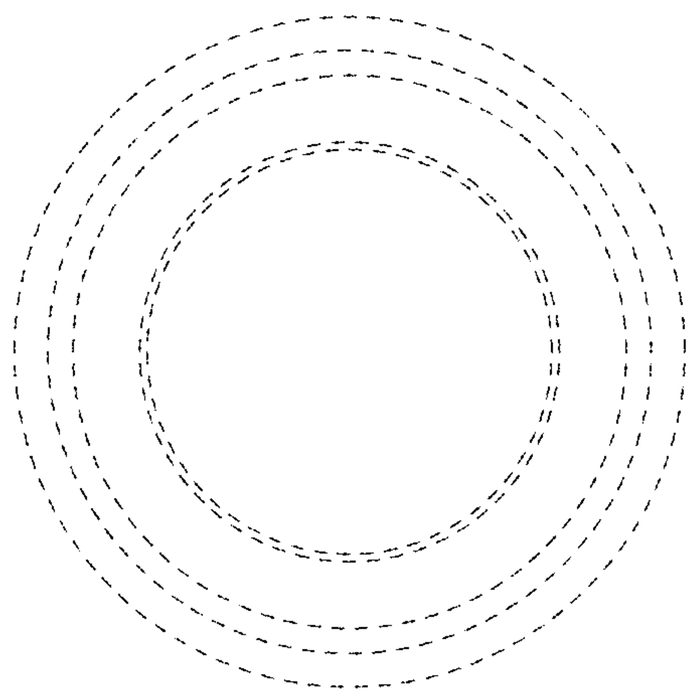

FIG. 8

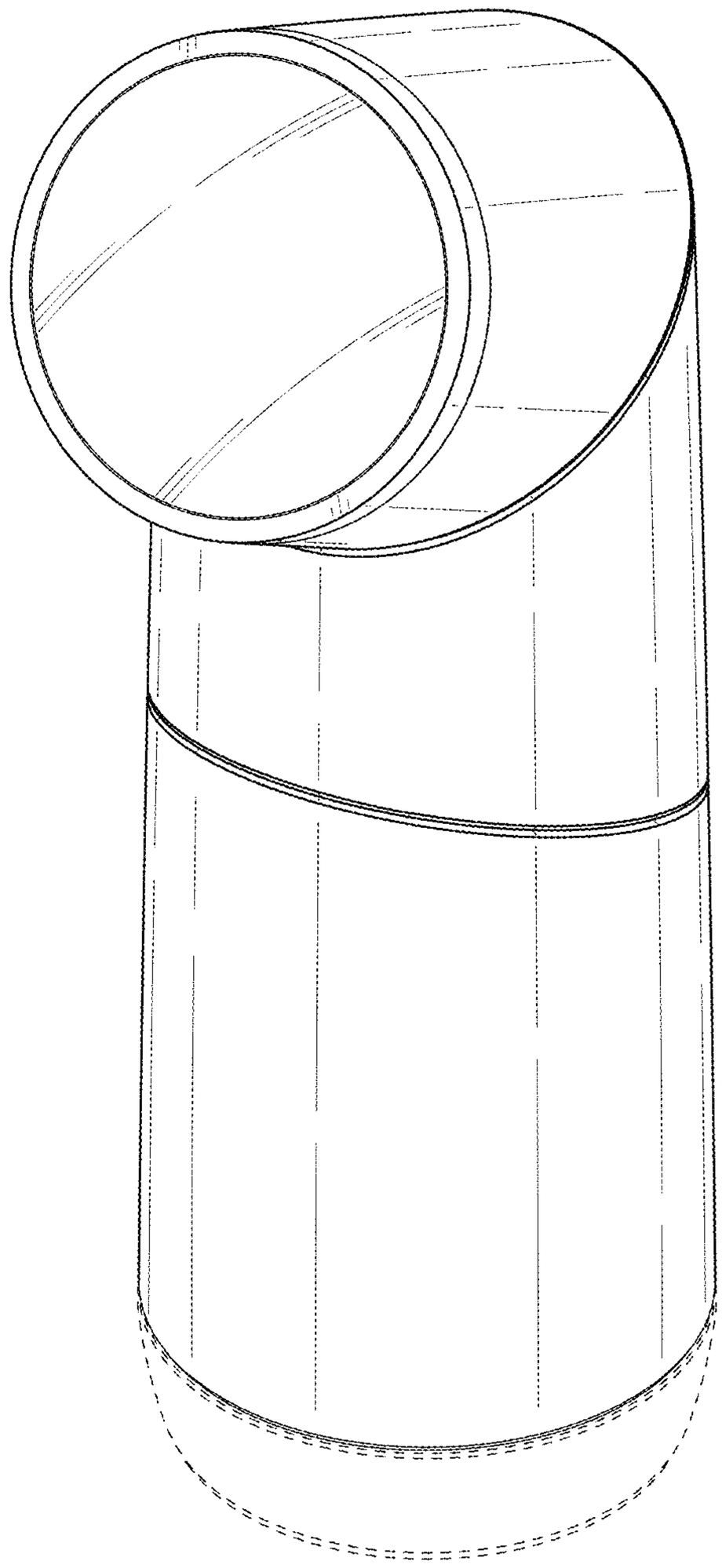

FIG. 9

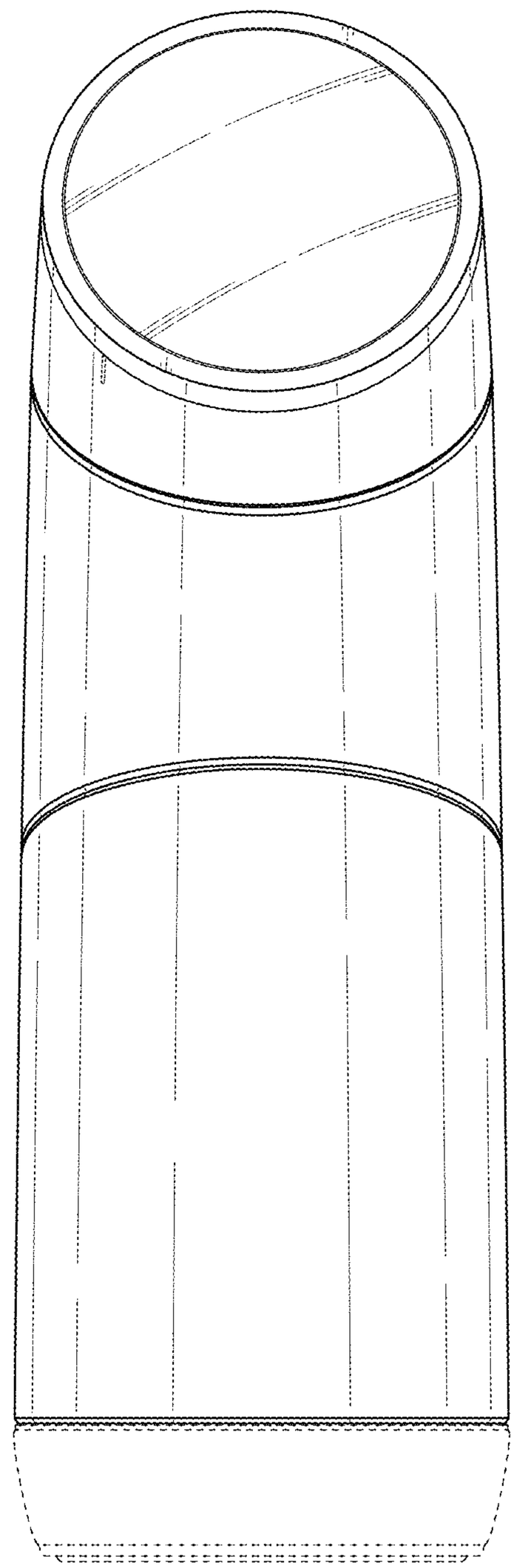

FIG. 10

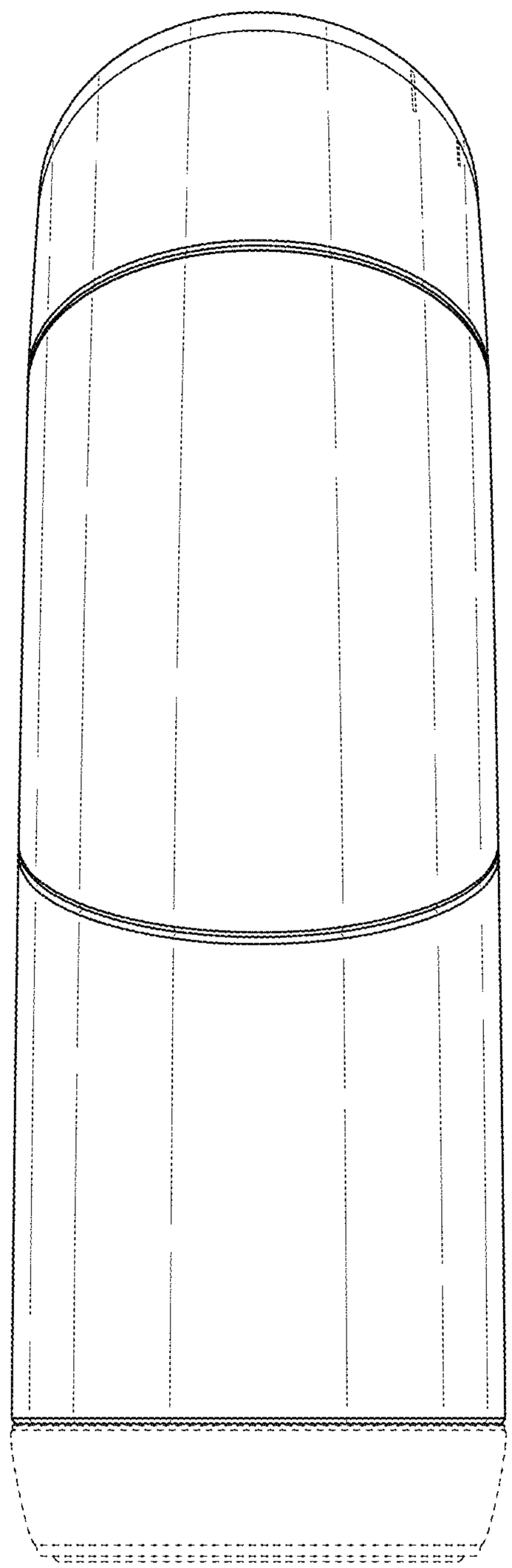

FIG. 11

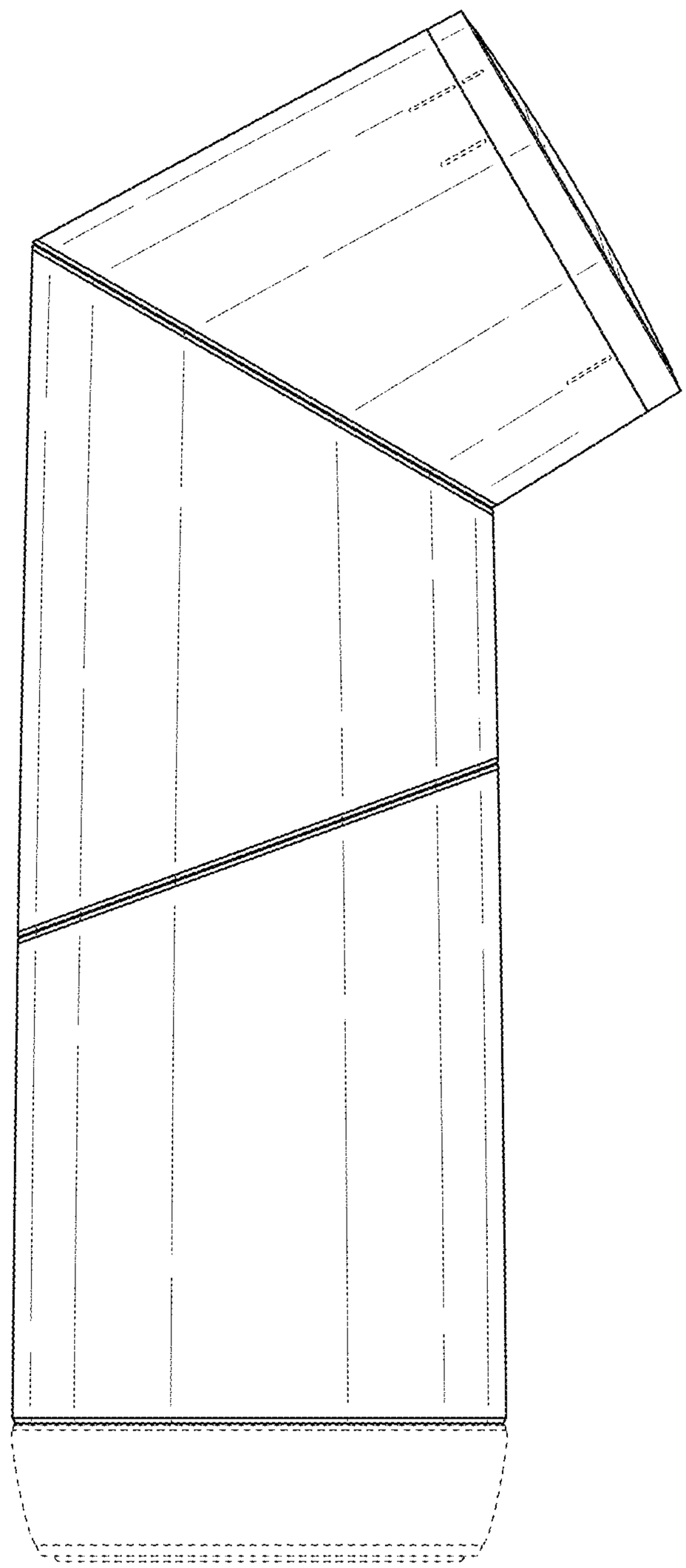

FIG. 12

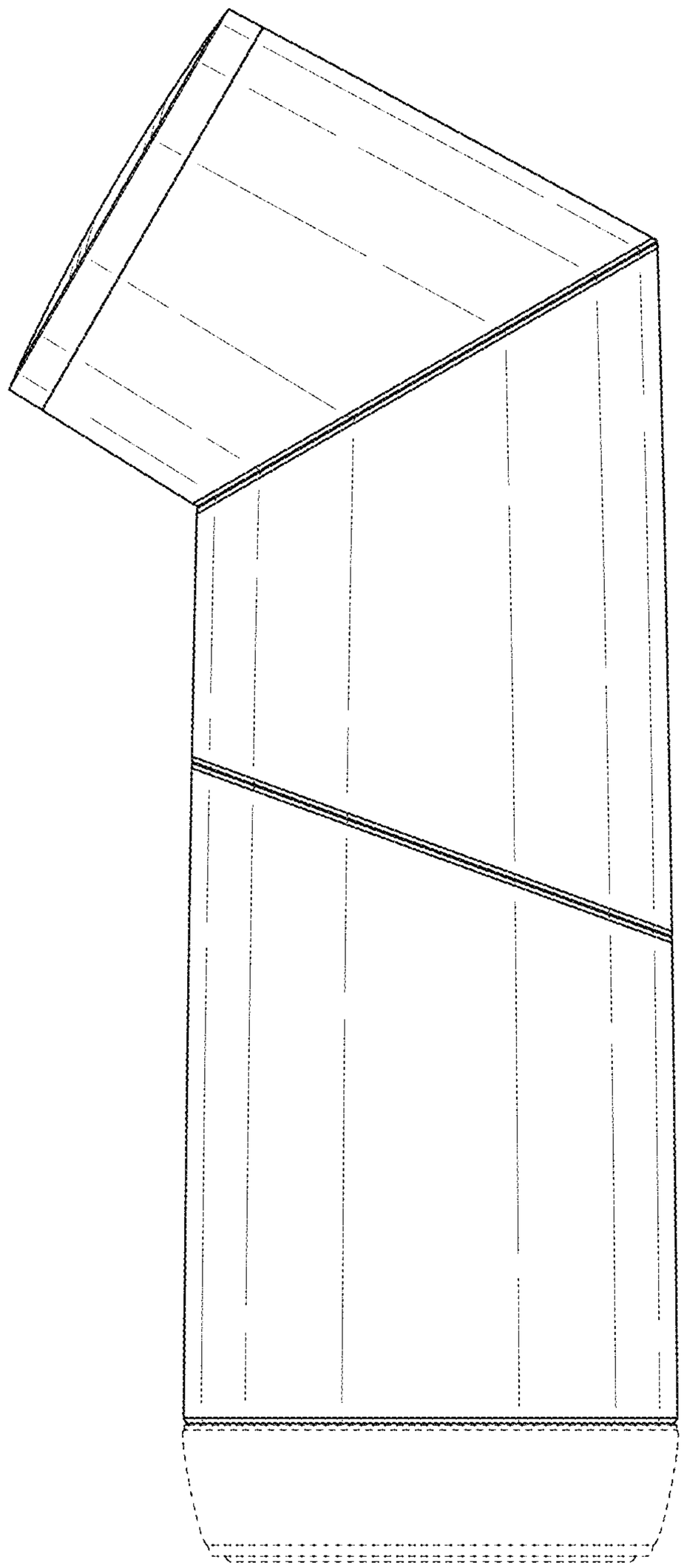

FIG. 13

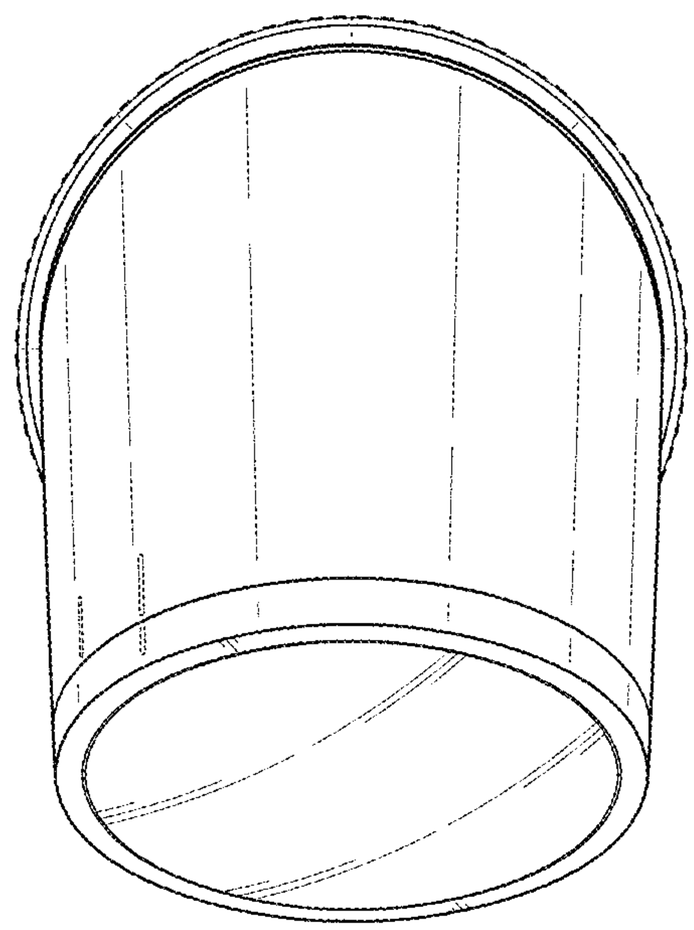

FIG. 14

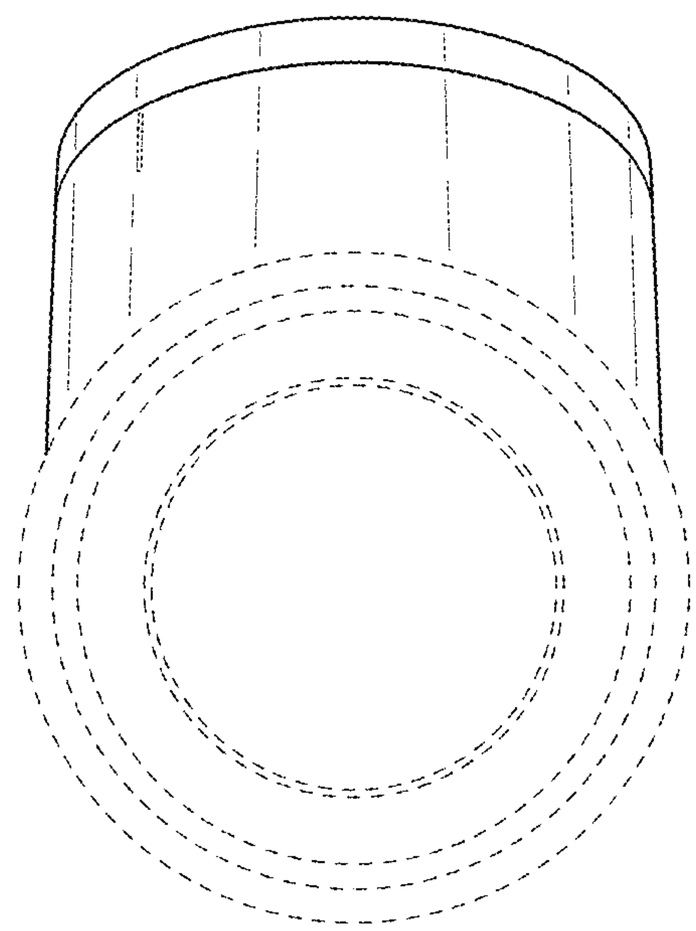

FIG. 15

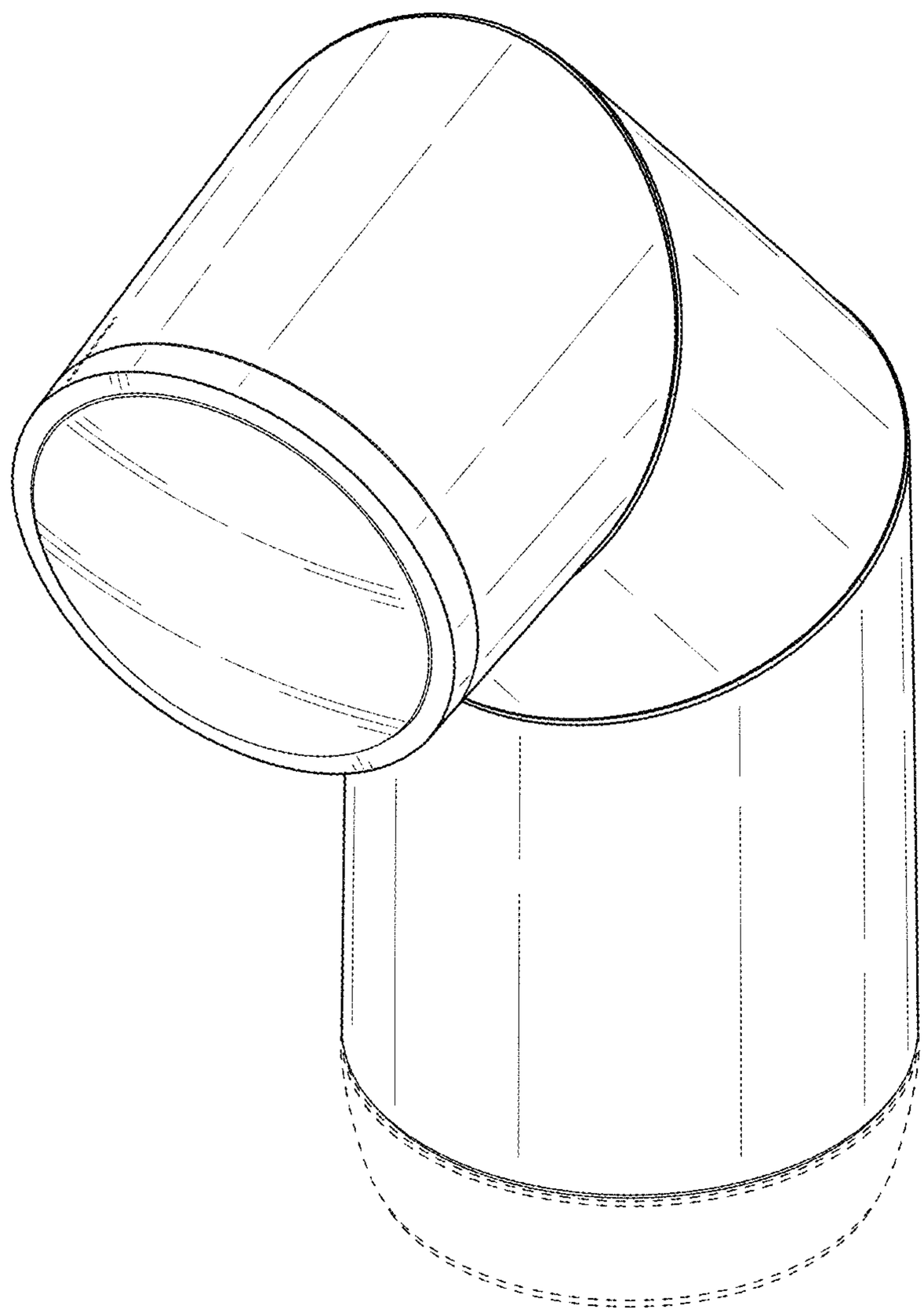

FIG. 16

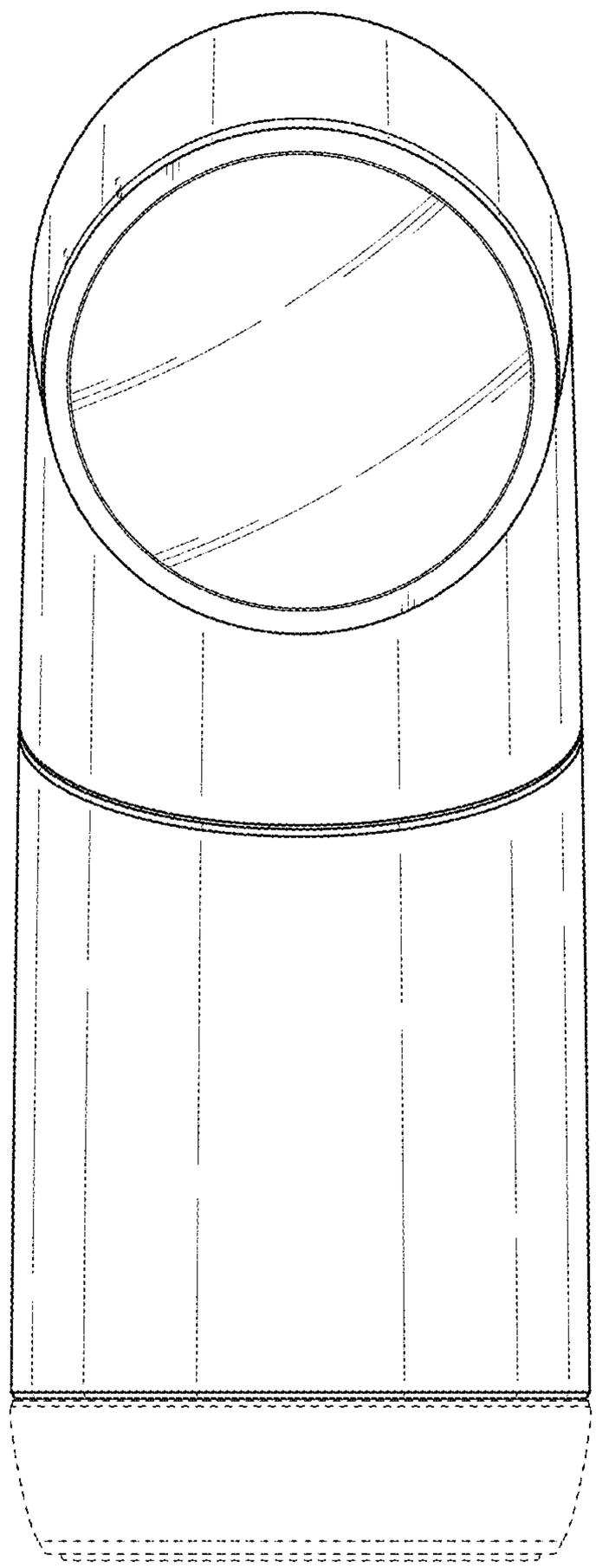

FIG. 17

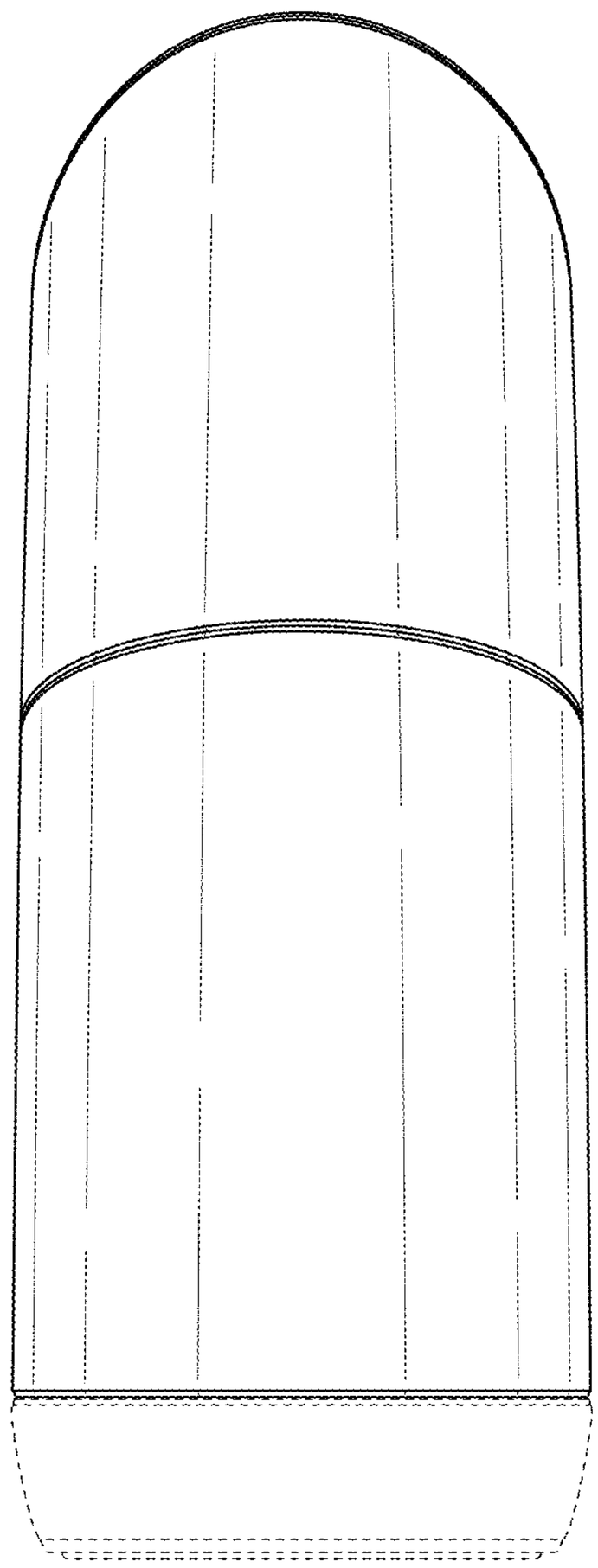

FIG. 18

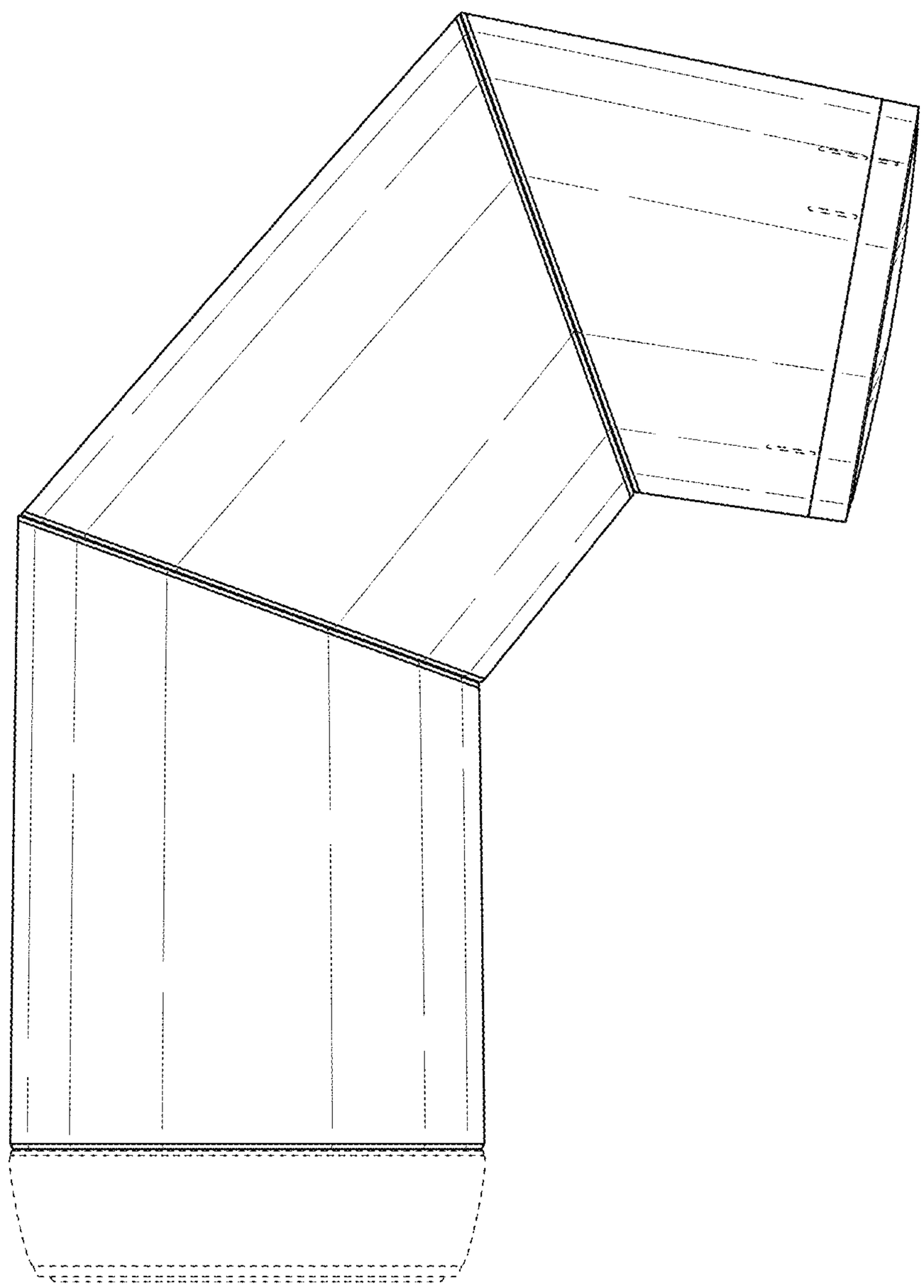

FIG. 19

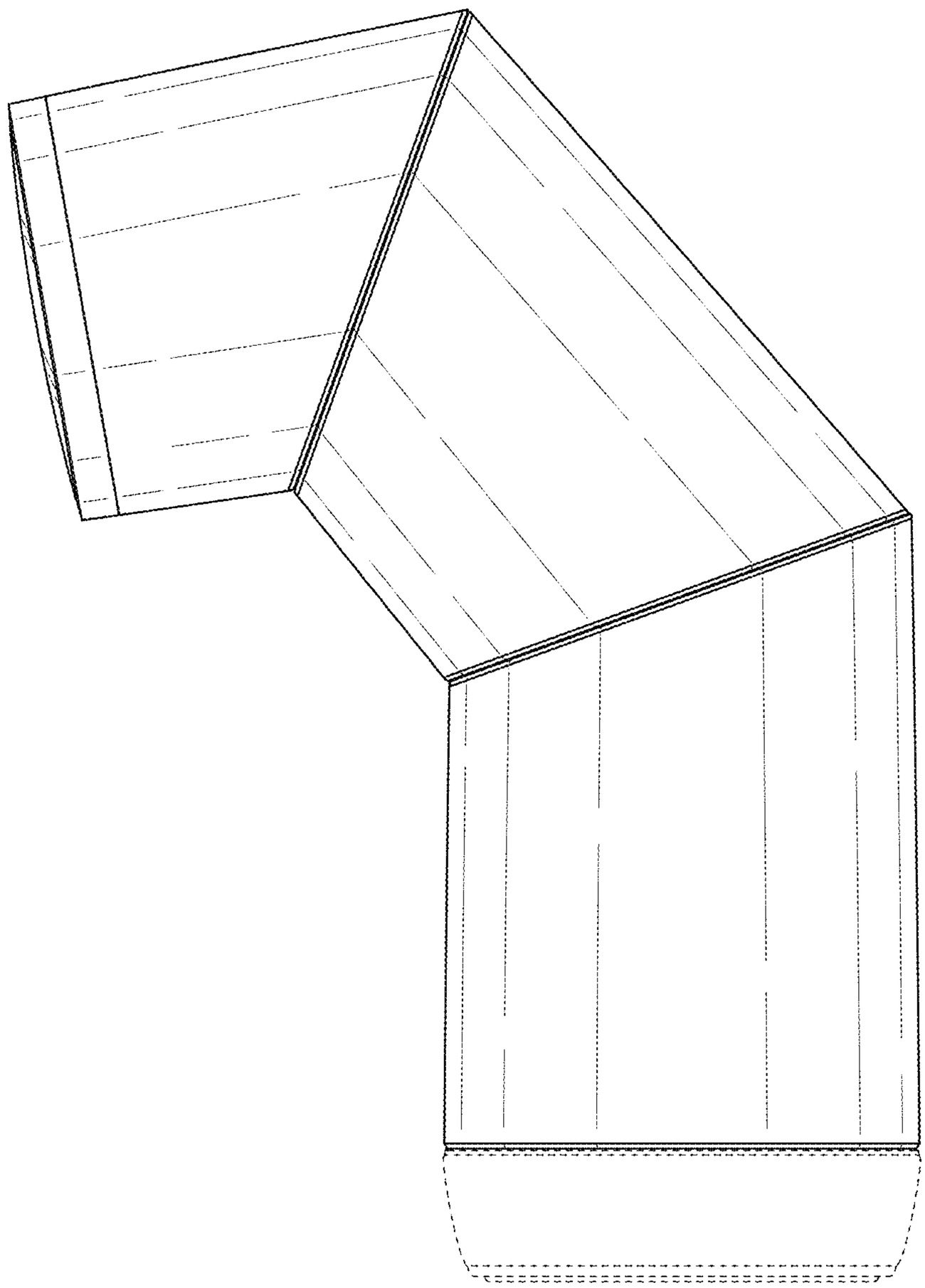

FIG. 20

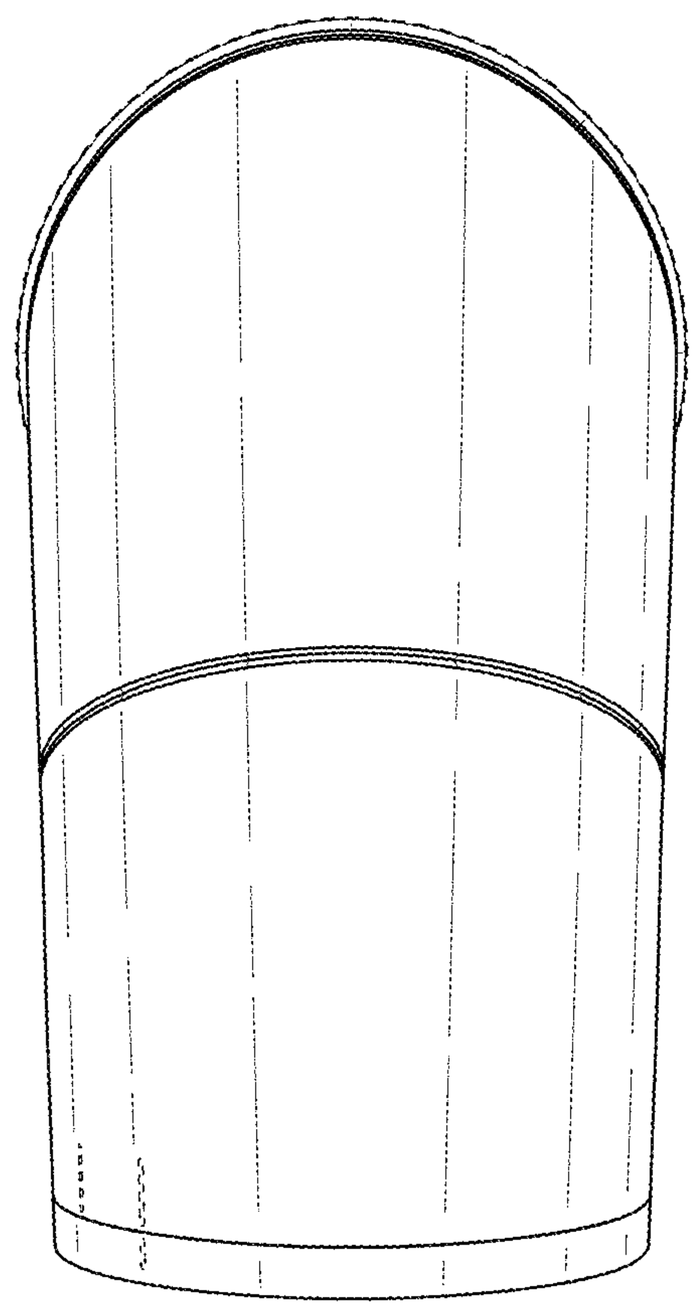

FIG. 21

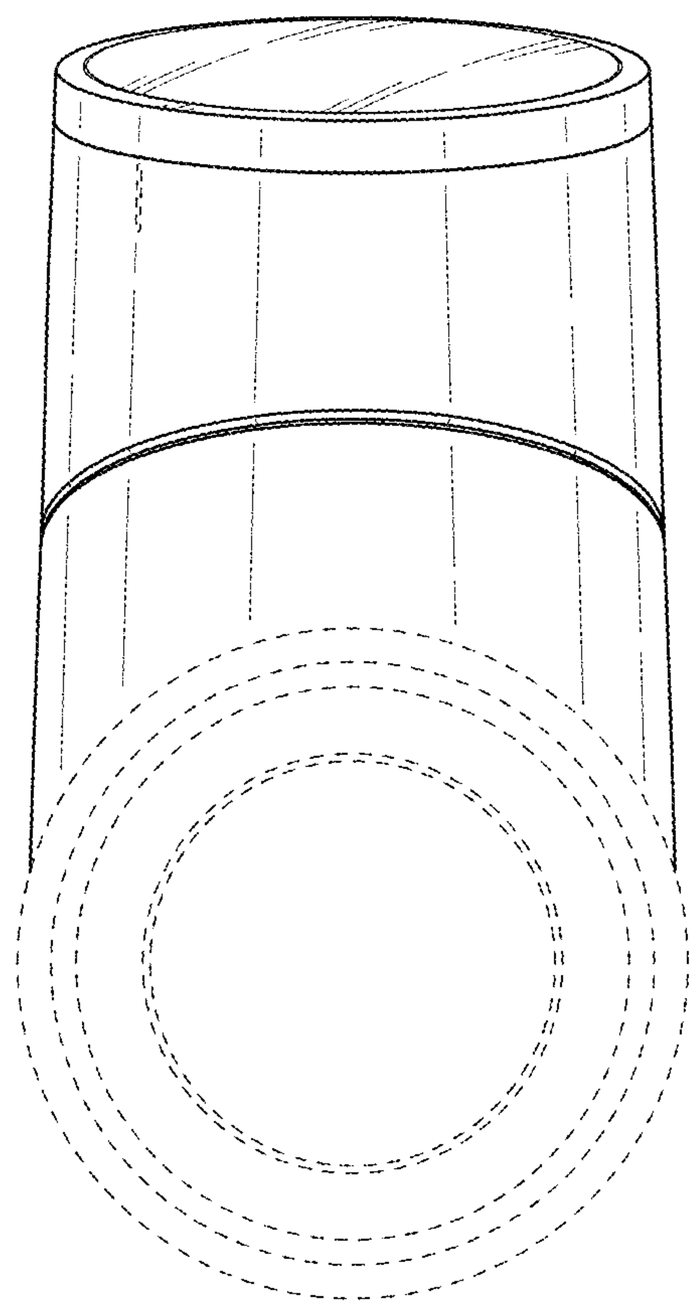

FIG. 22

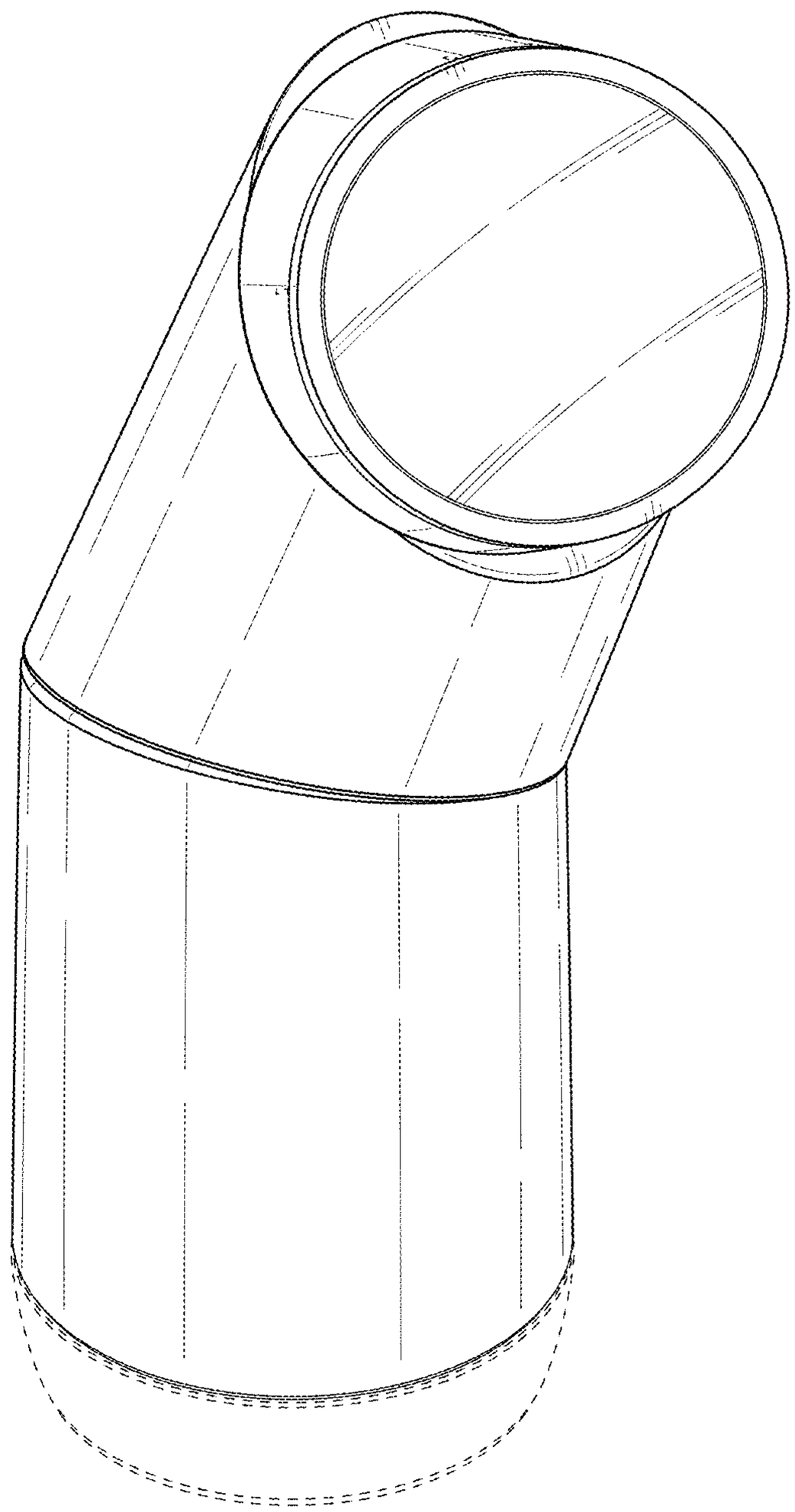

FIG. 23

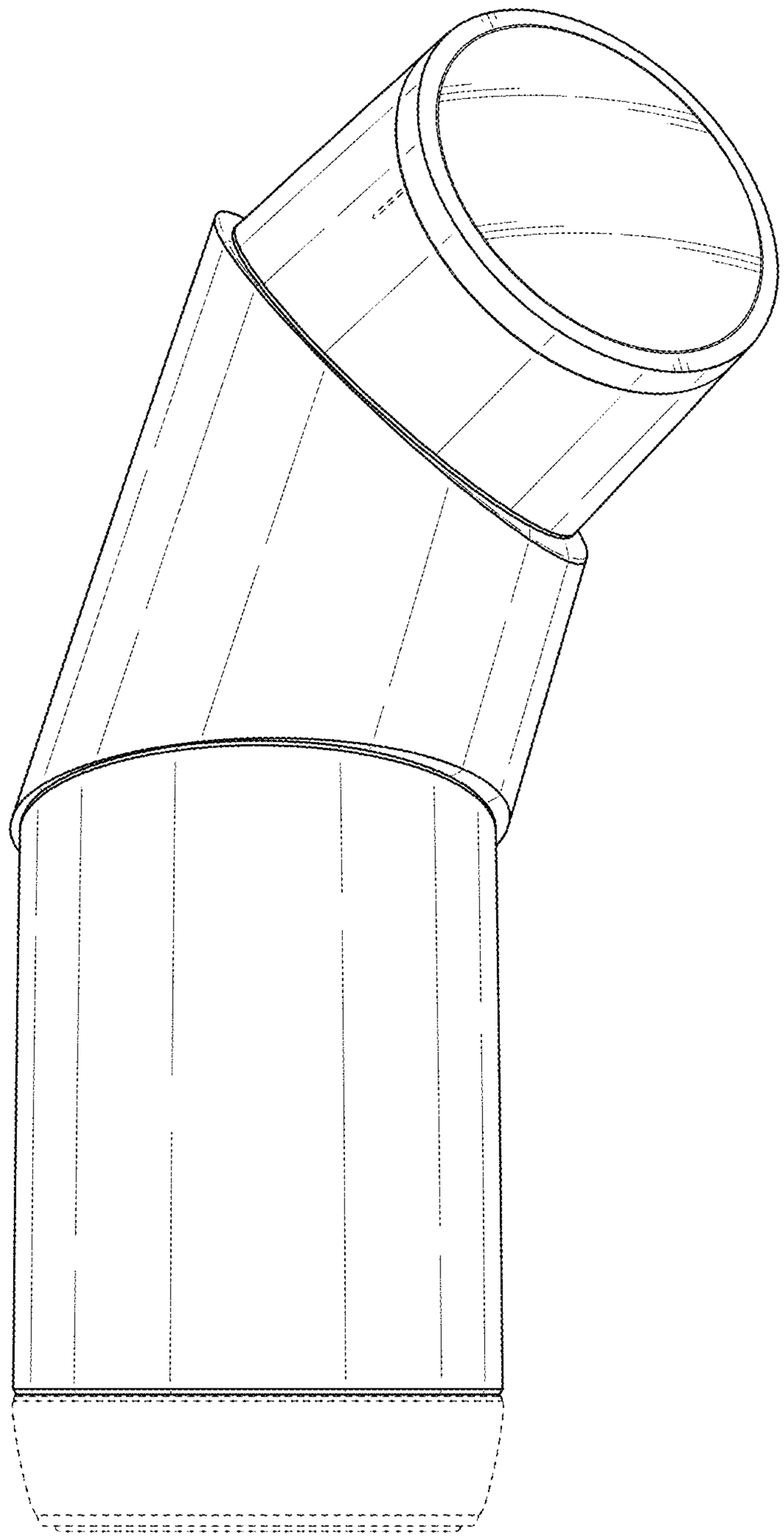

FIG. 24

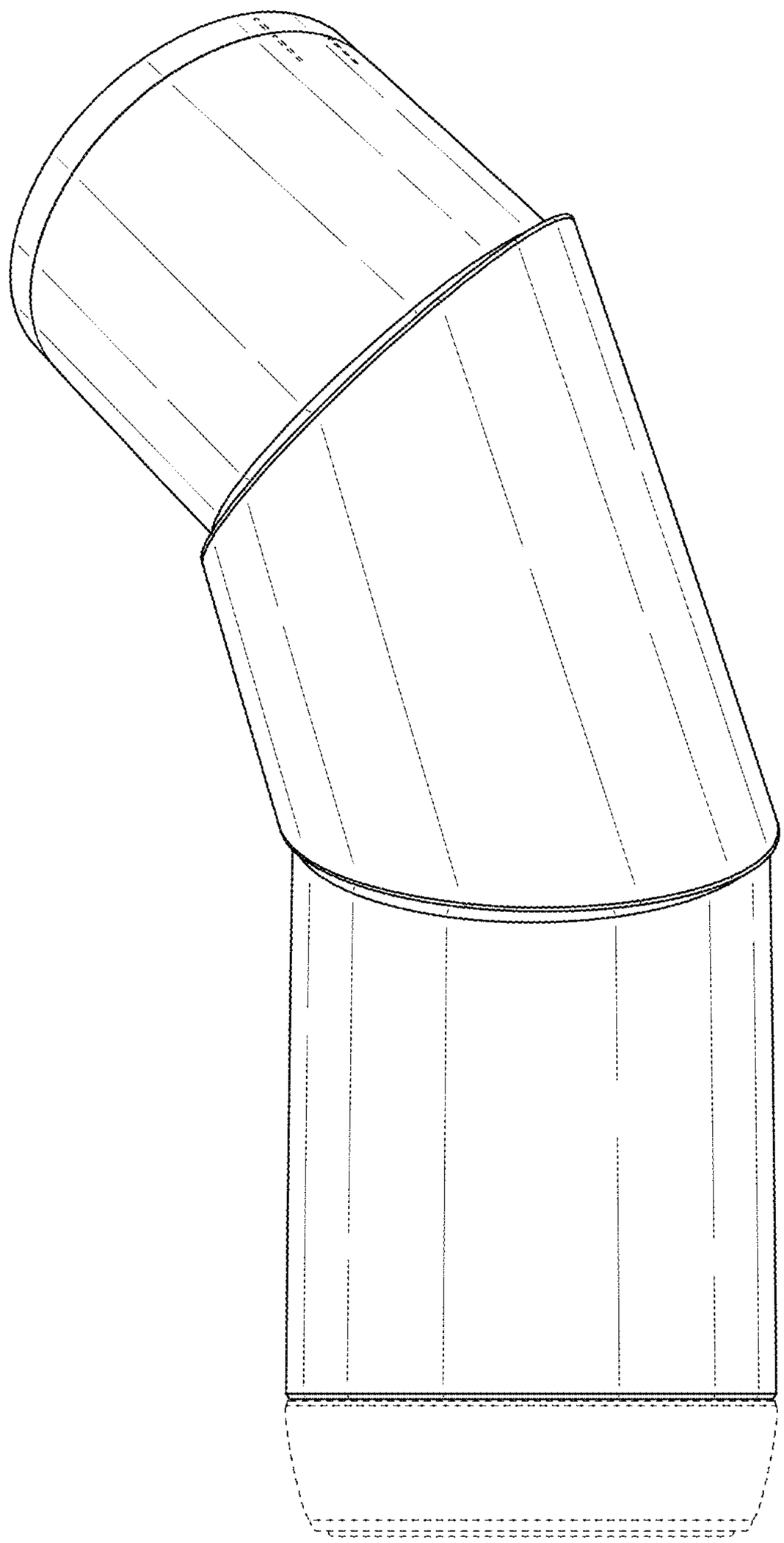

FIG. 25

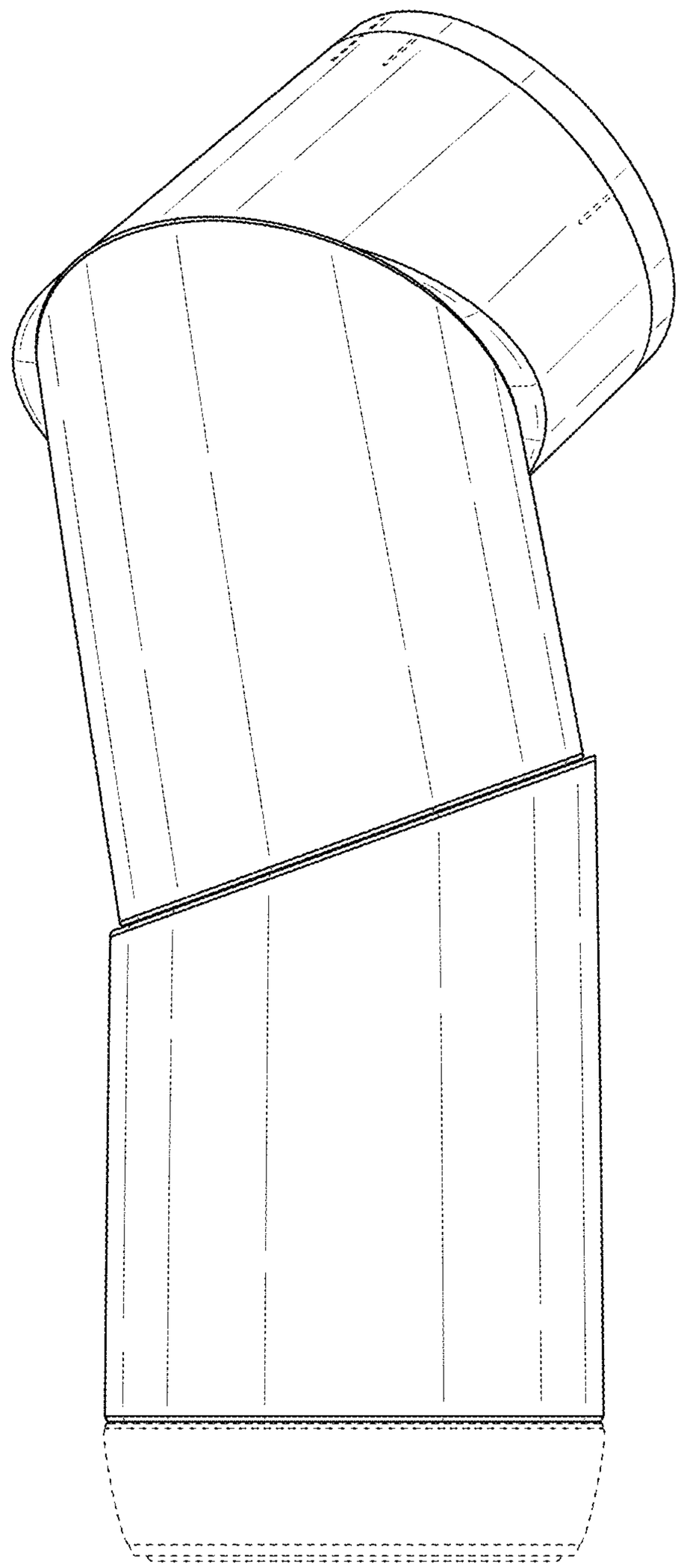

FIG. 26

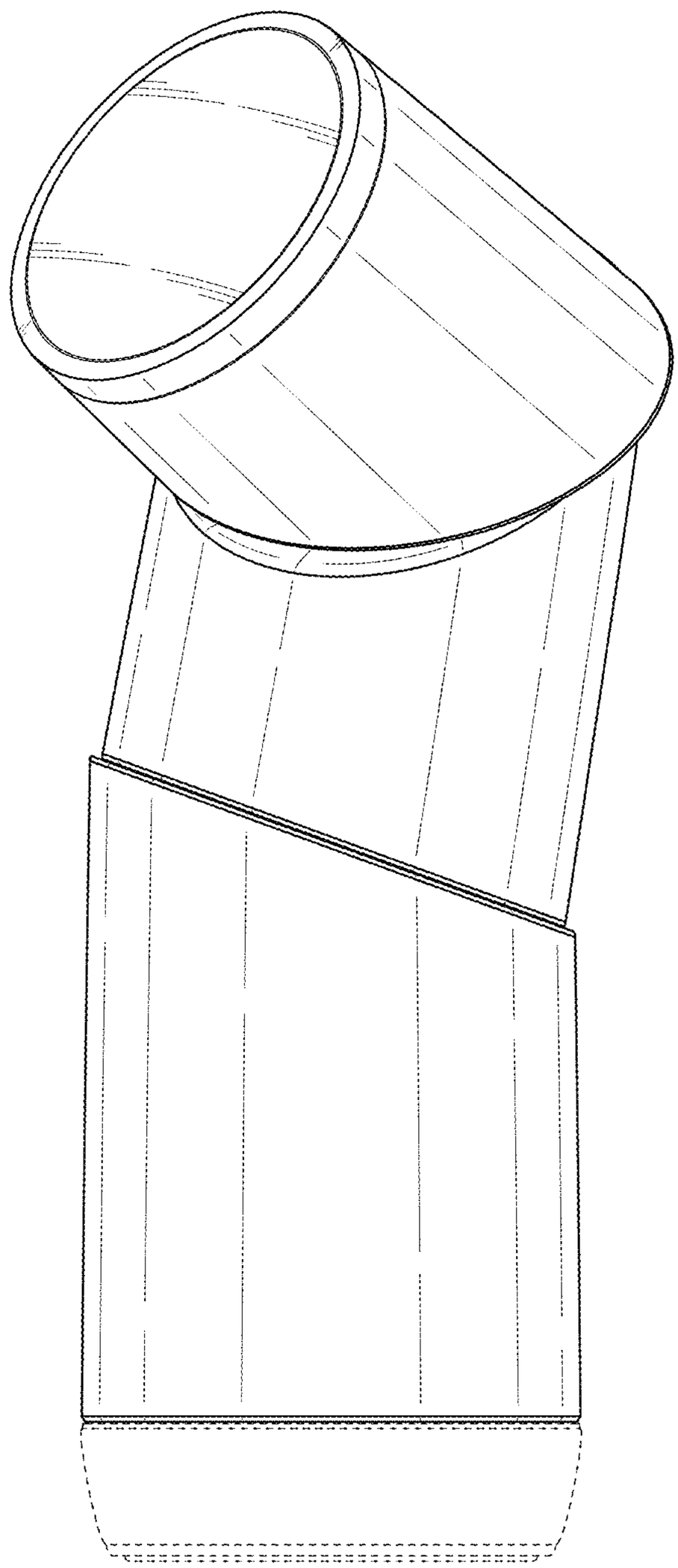

FIG. 27

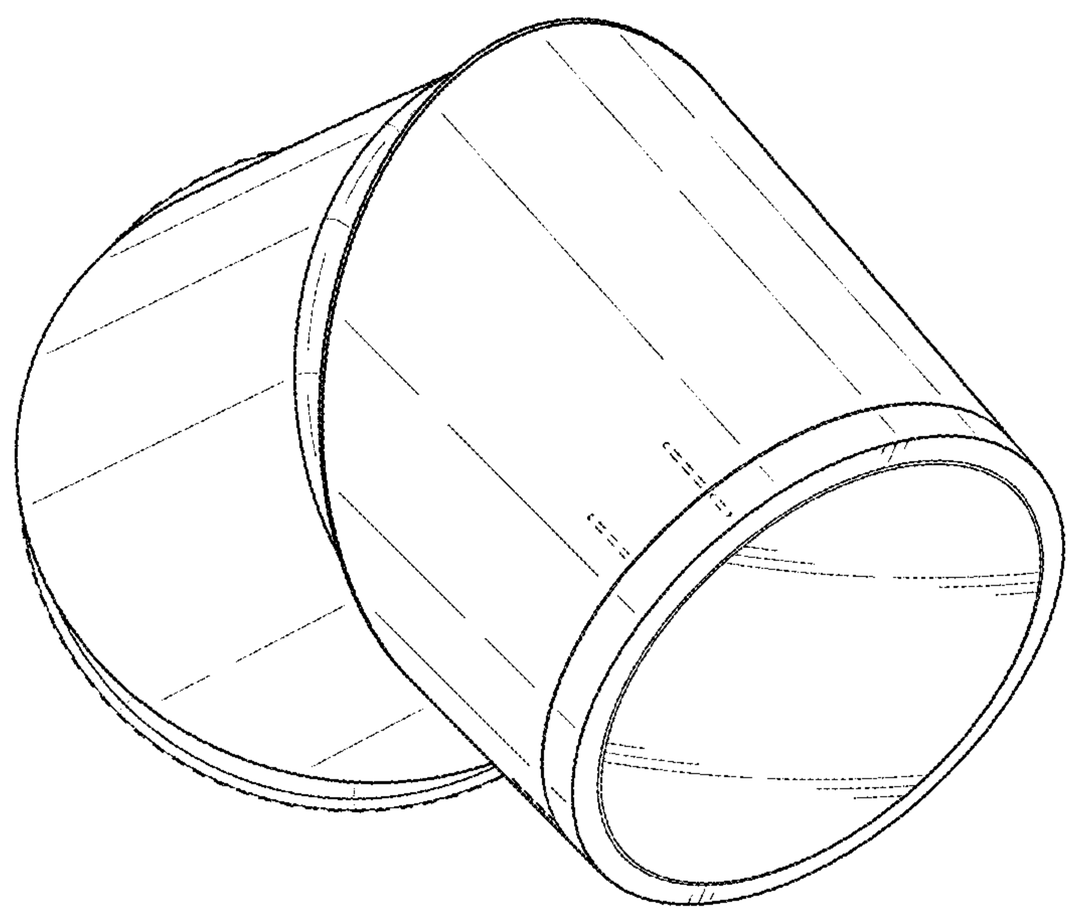
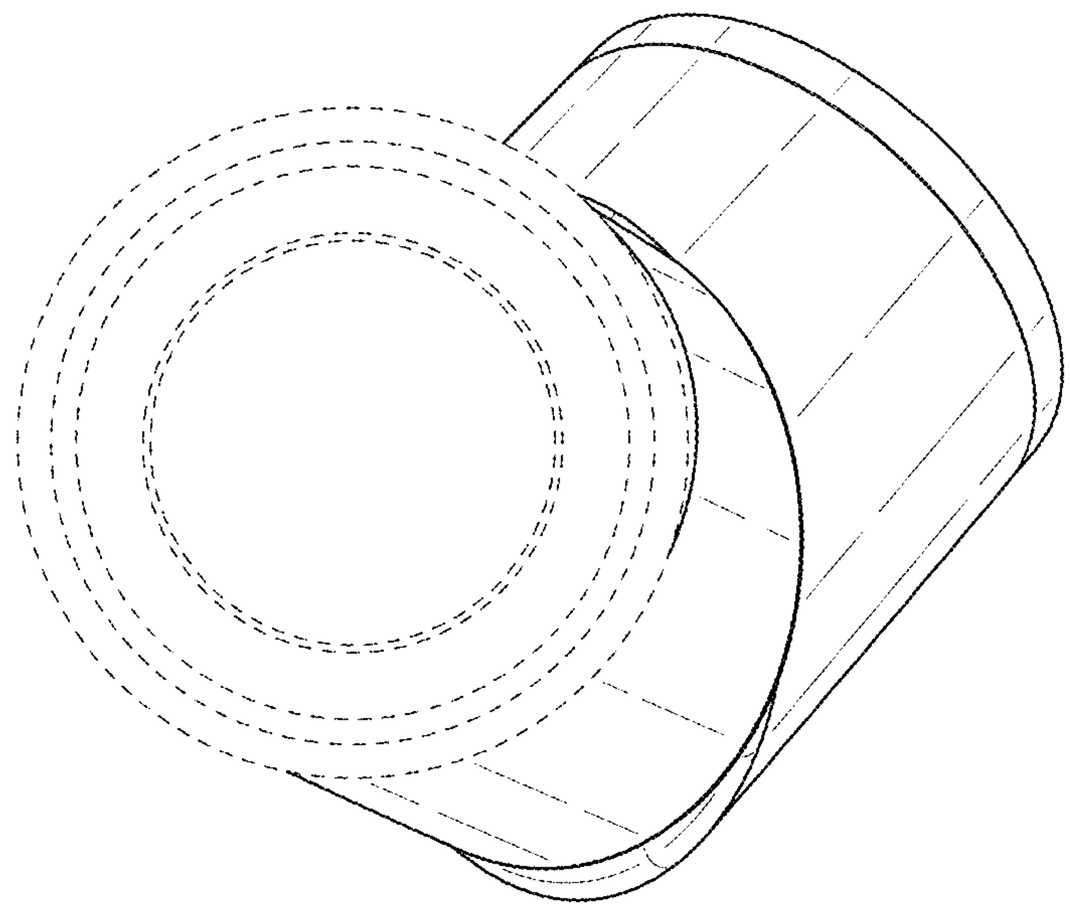
FIG. 28