US00D831717S

(12) United States Design Patent

Gou

(10) Patent No.: US D831,717 S
(45) Date of Patent: ** Oct. 23, 2018

(54) **CONTROLLING APPARATUS FOR SOLDERING**

(71) Applicant: **Guangzhou Yihua Electronic Equipment Co., Ltd.**, Guangzhou, Guangdong (CN)

(72) Inventor: **Mingkang Gou**, Guangdong (CN)

(73) Assignee: **GUANGZHOU YIHUA ELECTRONIC EQUIPMENT CO., LTD.**, Guangzhou, Guangdong (CN)

(**) Term: **15 Years**

(21) Appl. No.: **29/606,264**

(22) Filed: **Jun. 2, 2017**

(30) **Foreign Application Priority Data**

Dec. 8, 2016 (EP) 003507268-0010

(51) **LOC (11) Cl.** **15-03**

(52) **U.S. Cl.**
USPC **D15/144**

(58) **Field of Classification Search**
USPC D15/144, 144.1, 144.2; D14/217, 257, D14/197, 198, 258, 434, 496, 162, 167
CPC G02B 27/2214; G02B 3/0068; G02B 6/06
See application file for complete search history.

(56) **References Cited**

U.S. PATENT DOCUMENTS

D274,882 S * 7/1984 Rittmann D15/144
D467,257 S * 12/2002 Andersson D15/144
D569,883 S * 5/2008 Wang D15/144
D569,884 S * 5/2008 Shu D15/144
D733,777 S * 7/2015 Miller D15/144
D741,385 S * 10/2015 Evans D15/144
D744,019 S * 11/2015 Evans D15/144
D751,033 S * 3/2016 Dessart D13/110
D754,626 S * 4/2016 Evans D15/144
D777,231 S * 1/2017 Ide D15/144
D778,331 S * 2/2017 Ide D15/144
D810,161 S * 2/2018 Snead D15/144

* cited by examiner

Primary Examiner — Ian Simmons
Assistant Examiner — Khawaja Anwar
(74) *Attorney, Agent, or Firm* — Lucas & Mercanti LLP

(57) **CLAIM**

The ornamental design for a controlling apparatus for soldering, as shown and described.

DESCRIPTION

FIG. **1** is a perspective view of the controlling apparatus for soldering.
FIG. **2** is a front view thereof;
FIG. **3** is a rear view thereof;
FIG. **4** is a left side view thereof;
FIG. **5** is a right side view thereof;
FIG. **6** is a top view thereof; and,
FIG. **7** is a bottom view thereof.
The broken lines in FIGS. **2**, **3** and **7** show portions of the controlling apparatus for soldering that form no part of the claimed design.

1 Claim, 7 Drawing Sheets

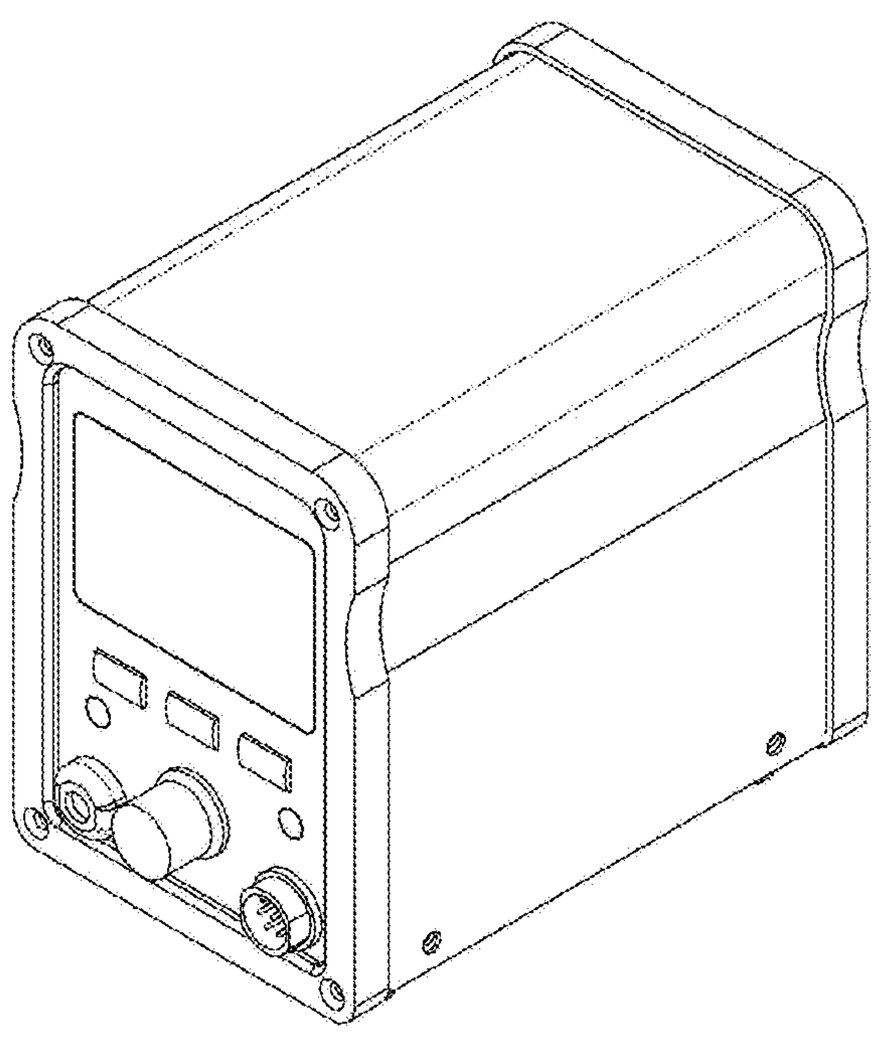

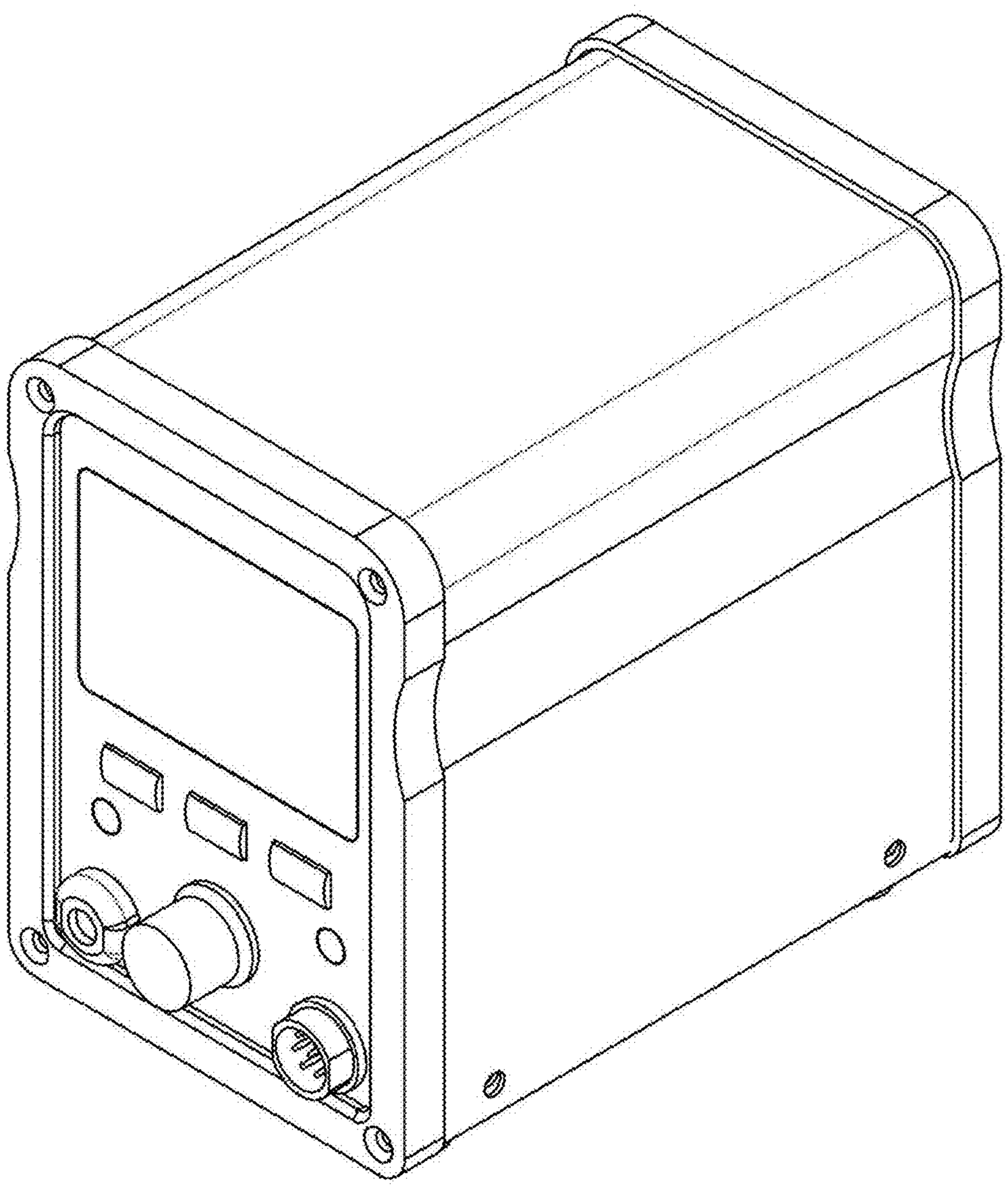

FIG. 1

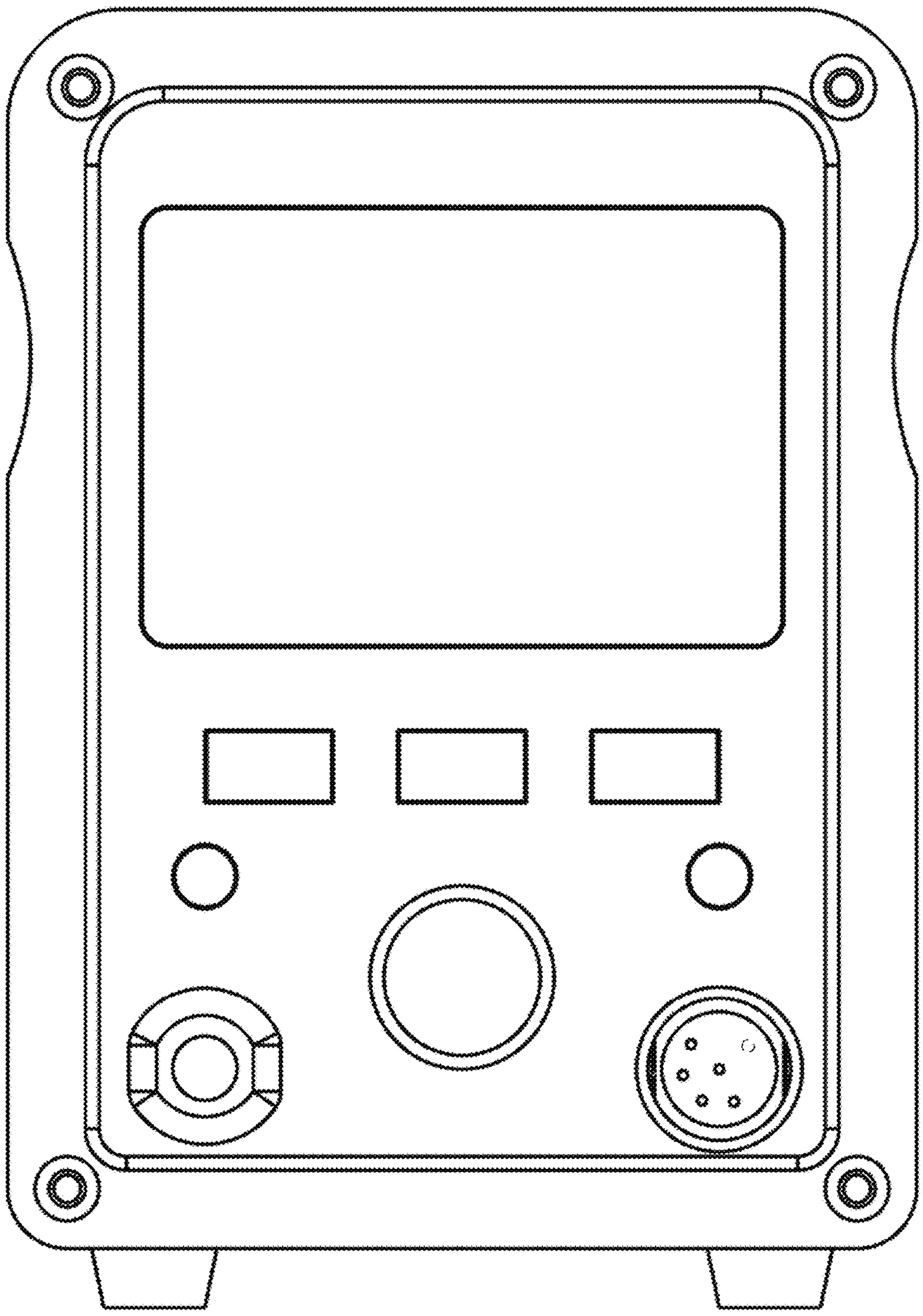

FIG. 2

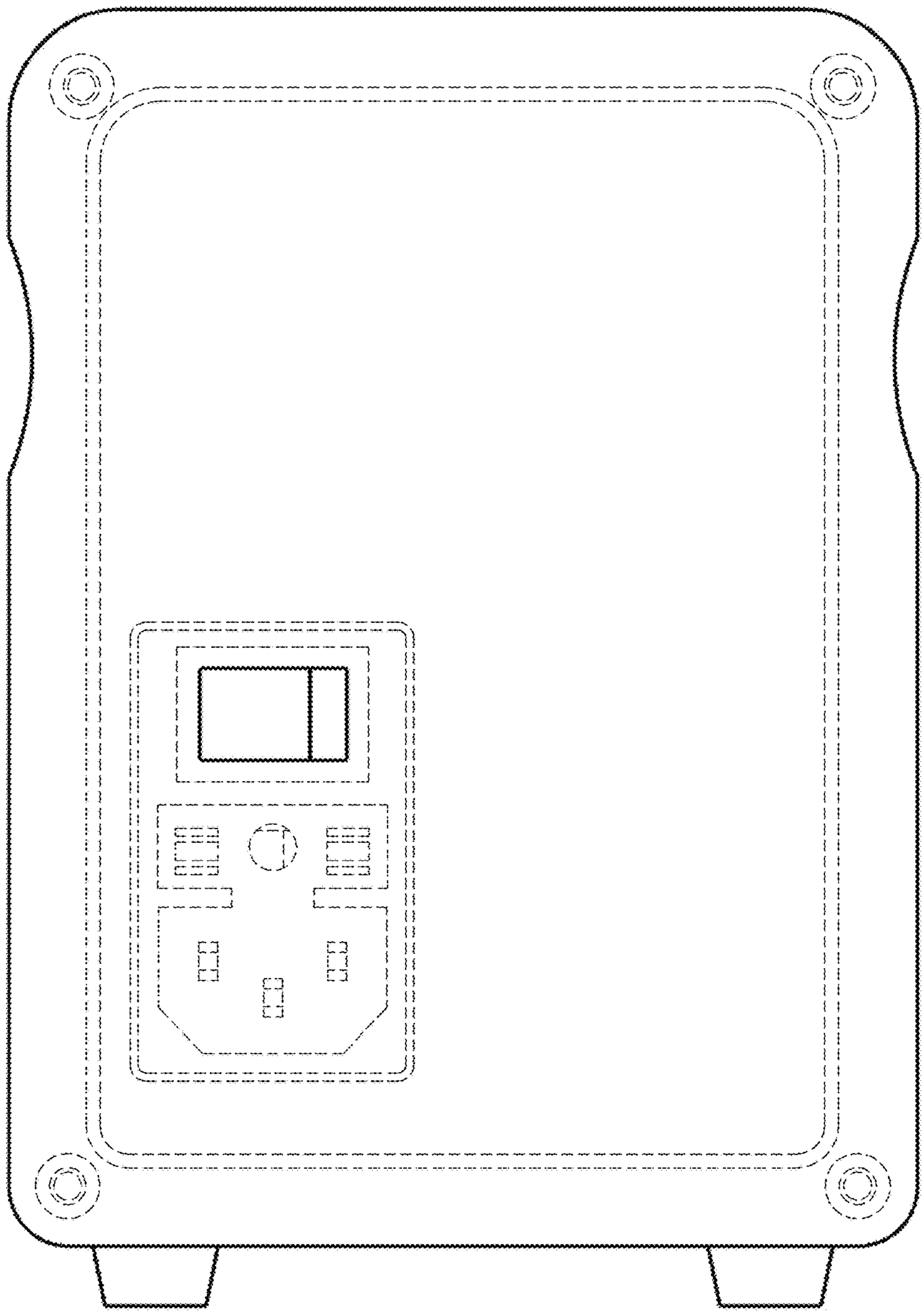

FIG. 3

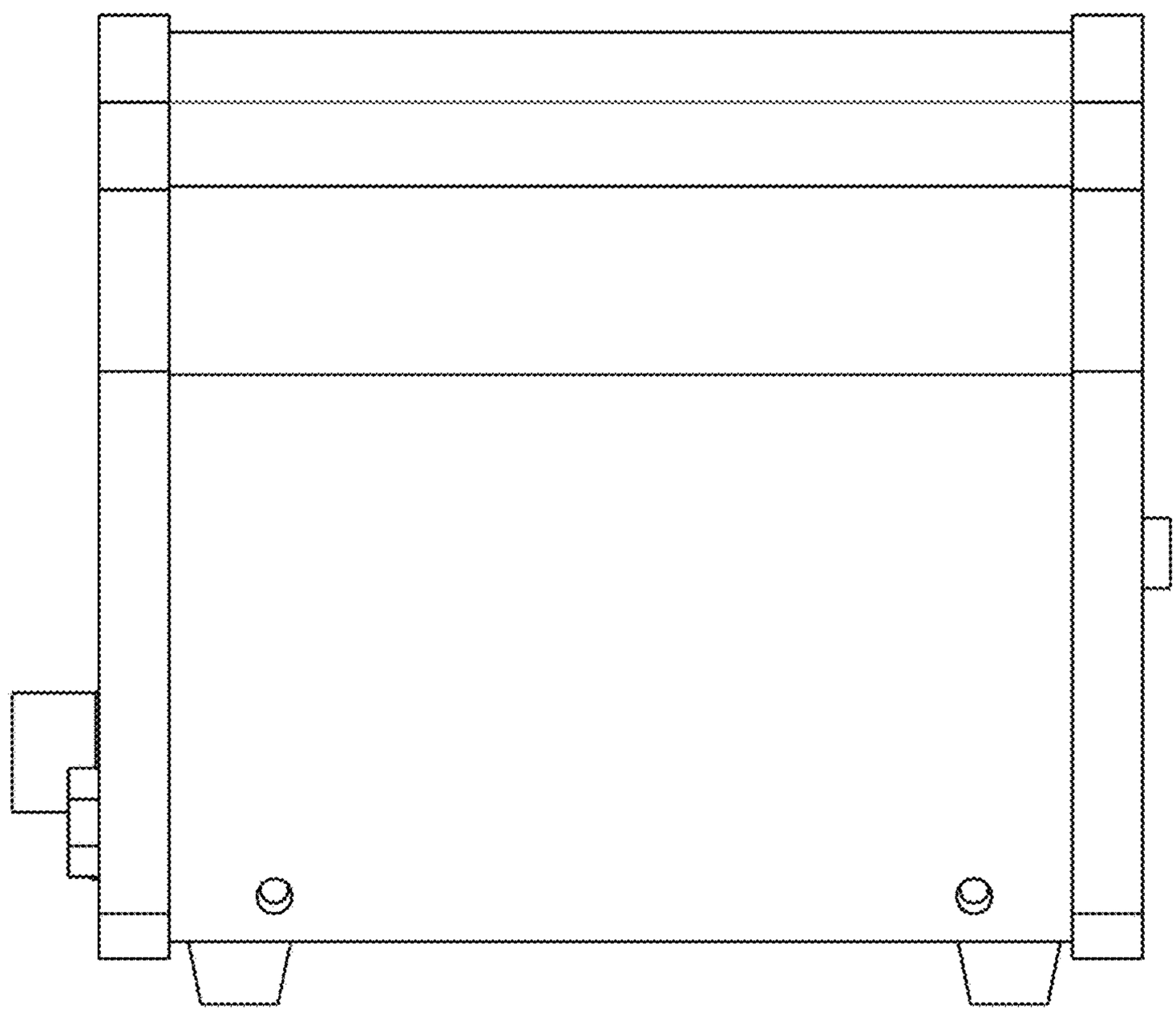

FIG. 4

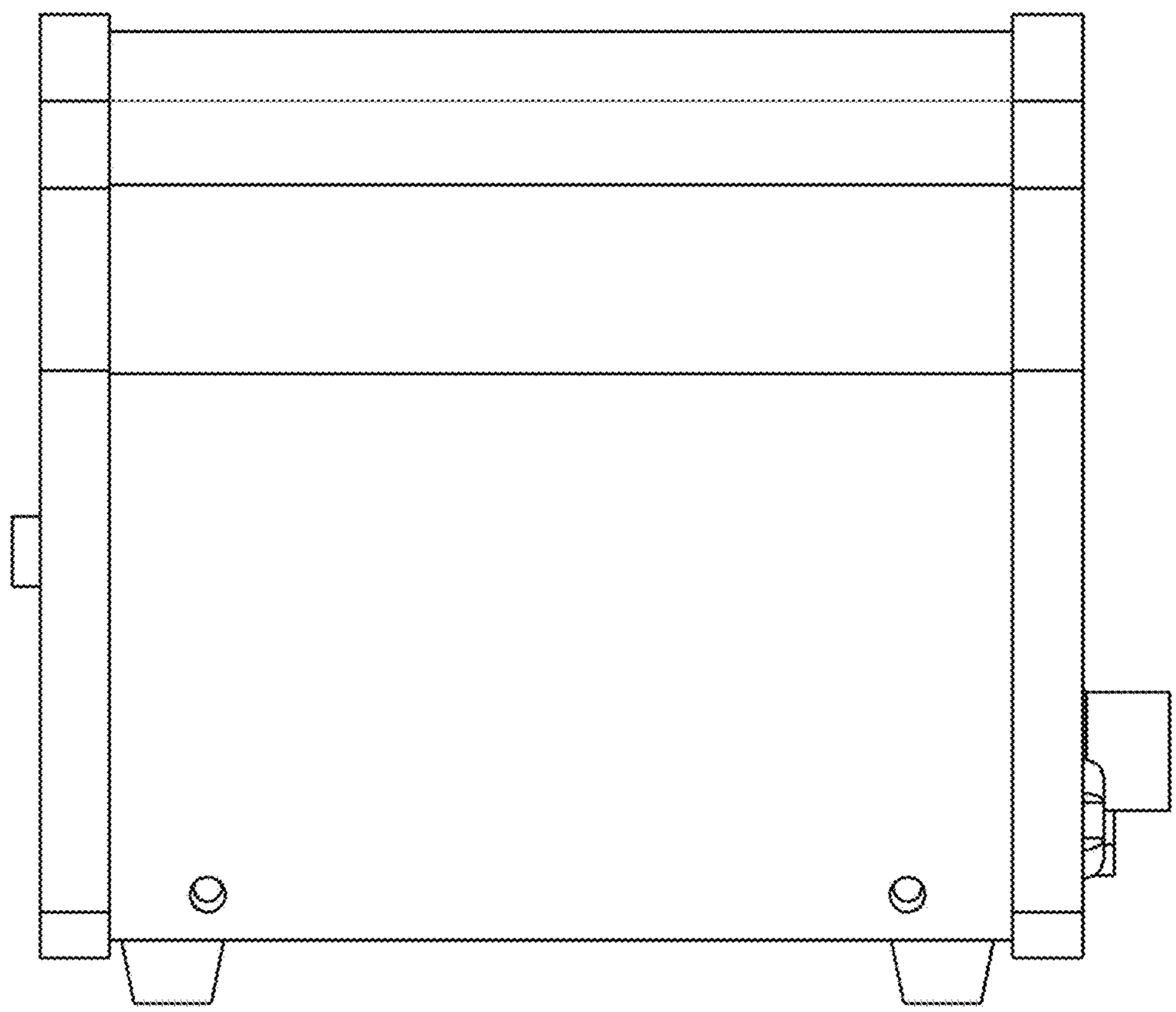

FIG. 5

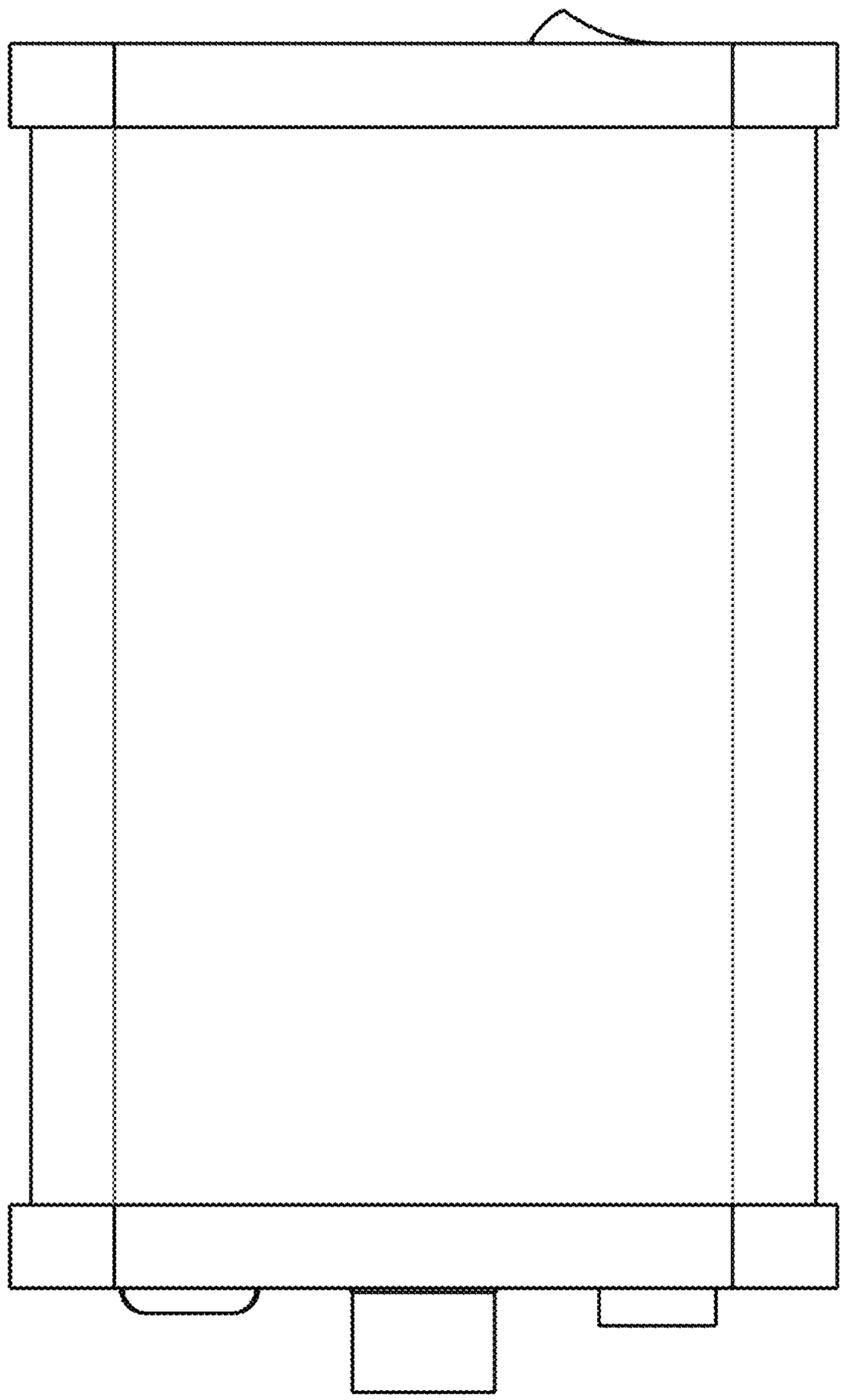

FIG. 6

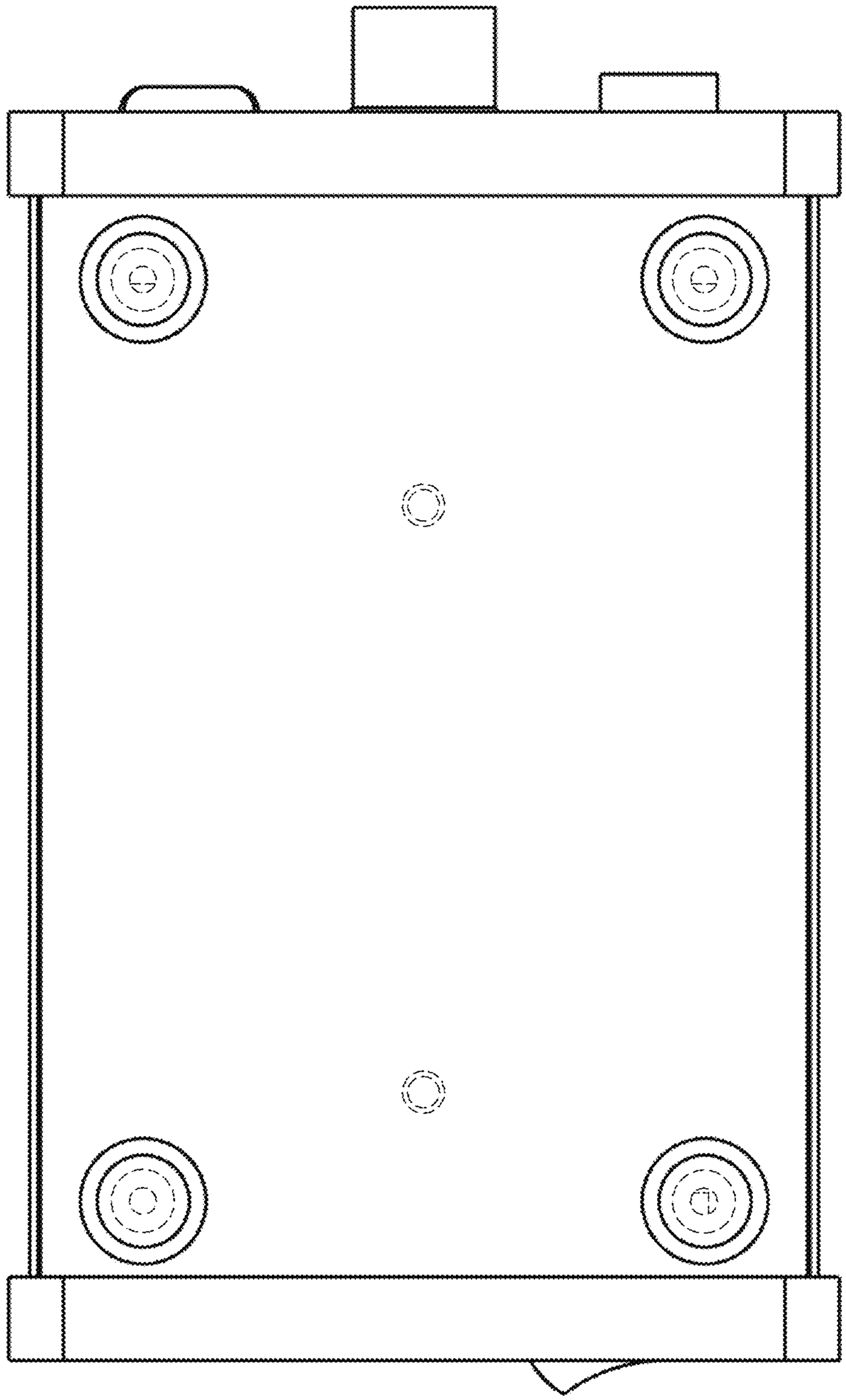

FIG. 7