US00D831087S

(12) United States Design Patent

Morimoto et al.

(10) Patent No.: US D831,087 S
(45) Date of Patent: ** Oct. 16, 2018

(54) **INDUSTRIAL ROBOT**

(71) Applicant: **DENSO WAVE INCORPORATED**, Chita-gun, Aichi-Pref. (JP)

(72) Inventors: **Hideki Morimoto**, Chita-gun (JP); **Shinji Sugiyama**, Chita-gun (JP)

(73) Assignee: **DENSO WAVE INCORPORATED**, Aichi-pref (JP)

(**) Term: **15 Years**

(21) Appl. No.: **29/618,098**

(22) Filed: **Sep. 19, 2017**

(30) **Foreign Application Priority Data**

Mar. 23, 2017 (JP) 2017-5951
Mar. 23, 2017 (JP) 2017-5954
Mar. 23, 2017 (JP) 2017-5955
Mar. 23, 2017 (JP) 2017-5956

(51) **LOC (11) Cl.** **15-99**

(52) **U.S. Cl.**
USPC **D15/199**

(58) **Field of Classification Search**
USPC D15/199; D21/578–583, 621, 622; D23/259, 262, 263
CPC B25J 9/161; B25J 9/1617; G05B 2219/33105; G05B 2219/36433; G05B 2219/39335; G05B 2219/39427; G05B 2219/40304
See application file for complete search history.

(56) **References Cited**

U.S. PATENT DOCUMENTS

D650,820 S * 12/2011 Long D15/199
D655,324 S * 3/2012 Wong D15/199
D670,319 S * 11/2012 Liu D15/199
D677,294 S * 3/2013 Long D15/199
(Continued)

Primary Examiner — Patricia A Palasik
(74) *Attorney, Agent, or Firm* — Oliff PLC

(57) **CLAIM**

The ornamental design for an industrial robot, as shown and described.

DESCRIPTION

FIG. **1** is a front elevational view of a first embodiment of the industrial robot;
FIG. **2** is a left-side elevational view thereof;
FIG. **3** is a right-side elevational view thereof;
FIG. **4** is a rear elevational view thereof;
FIG. **5** is a top plan view of thereof;
FIG. **6** is a bottom plan view thereof;
FIG. **7** is a first perspective view thereof;
FIG. **8** is a second perspective view thereof;
FIG. **9** is a front elevational view of a second embodiment of the industrial robot;
FIG. **10** is a left-side elevational view thereof;
FIG. **11** is a right-side elevational view thereof;
FIG. **12** is a rear elevational view thereof;
FIG. **13** is a top plan view of thereof;
FIG. **14** is a bottom plan view thereof;
FIG. **15** is a first perspective view thereof;
FIG. **16** is a second perspective thereof;
FIG. **17** is a front elevational view of a third embodiment of the industrial robot;
FIG. **18** is a left-side elevational view thereof;
FIG. **19** is a right-side elevational view thereof;
FIG. **20** is a rear elevational view thereof;
FIG. **21** is a top plan view thereof;
FIG. **22** is a bottom plan view thereof;
FIG. **23** is a first perspective view thereof; and,
FIG. **24** is a second perspective view thereof.
The dot-dash chain lines depict boundaries of the claimed subject matter, and thus form no part of the claimed design. The broken lines in the drawings of the industrial robot depict unclaimed environmental subject matter.

1 Claim, 12 Drawing Sheets

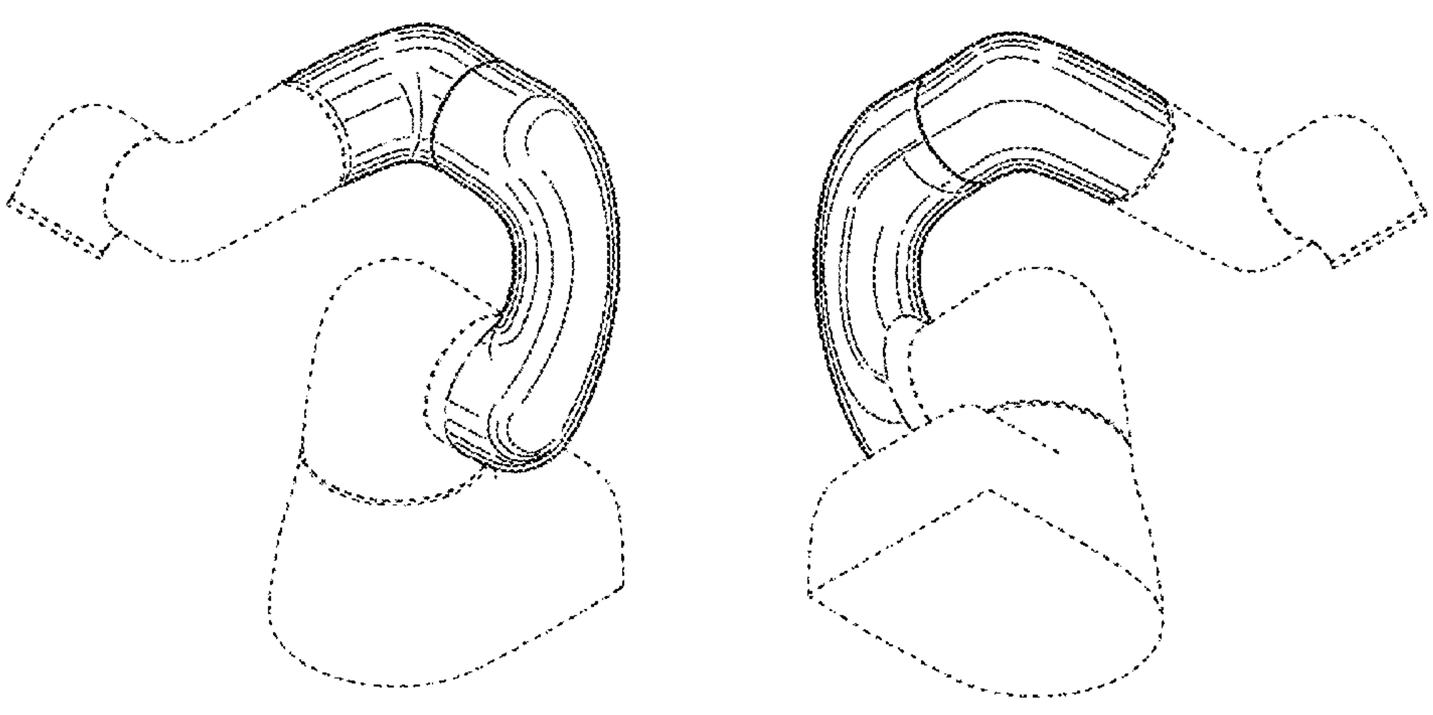

(56) **References Cited**

U.S. PATENT DOCUMENTS

D692,041	S	*	10/2013	Selic	D15/199
D716,357	S	*	10/2014	Gombert	D15/199
D761,339	S	*	7/2016	White, Jr.	D15/199
D776,178	S	*	1/2017	Ries	D15/199
D802,041	S	*	11/2017	He	D15/199
2010/0131099	A1	*	5/2010	Birkenbach	G05B 19/402 700/254
2011/0107866	A1	*	5/2011	Oka	B25J 9/0084 74/490.03
2013/0116821	A1	*	5/2013	Joly	B25J 9/161 700/254
2013/0125696	A1	*	5/2013	Long	B25J 18/04 74/490.05
2015/0127151	A1	*	5/2015	Riedel	B25J 9/1643 700/250
2016/0016320	A1	*	1/2016	Rothfuss	A61B 19/2203 74/490.03
2017/0129106	A1	*	5/2017	Schautt	B25J 9/1692
2017/0266807	A1	*	9/2017	Gombert	B25J 9/161
2018/0065245	A1	*	3/2018	Kubota	G05B 19/05

* cited by examiner

FIG. 1

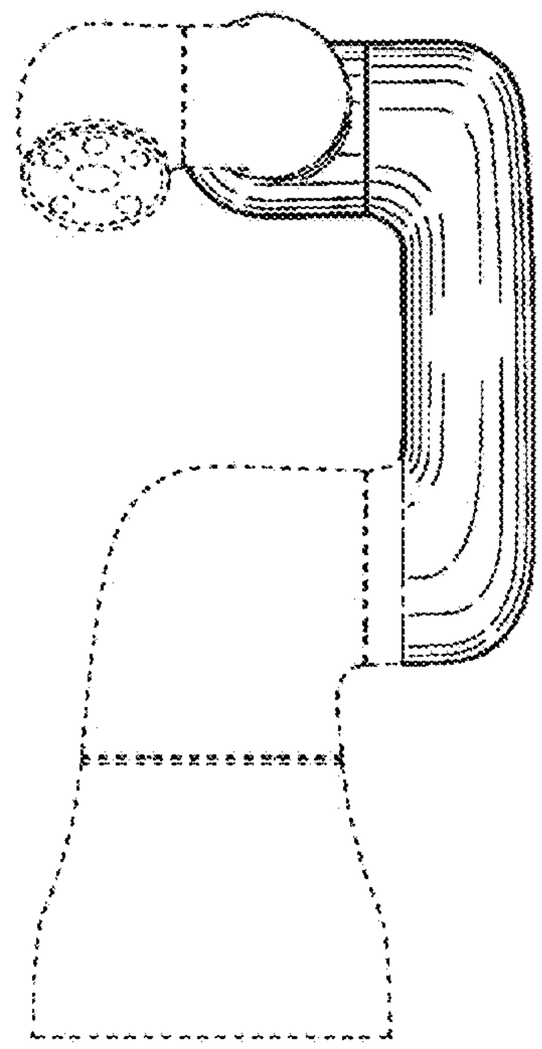

FIG. 2

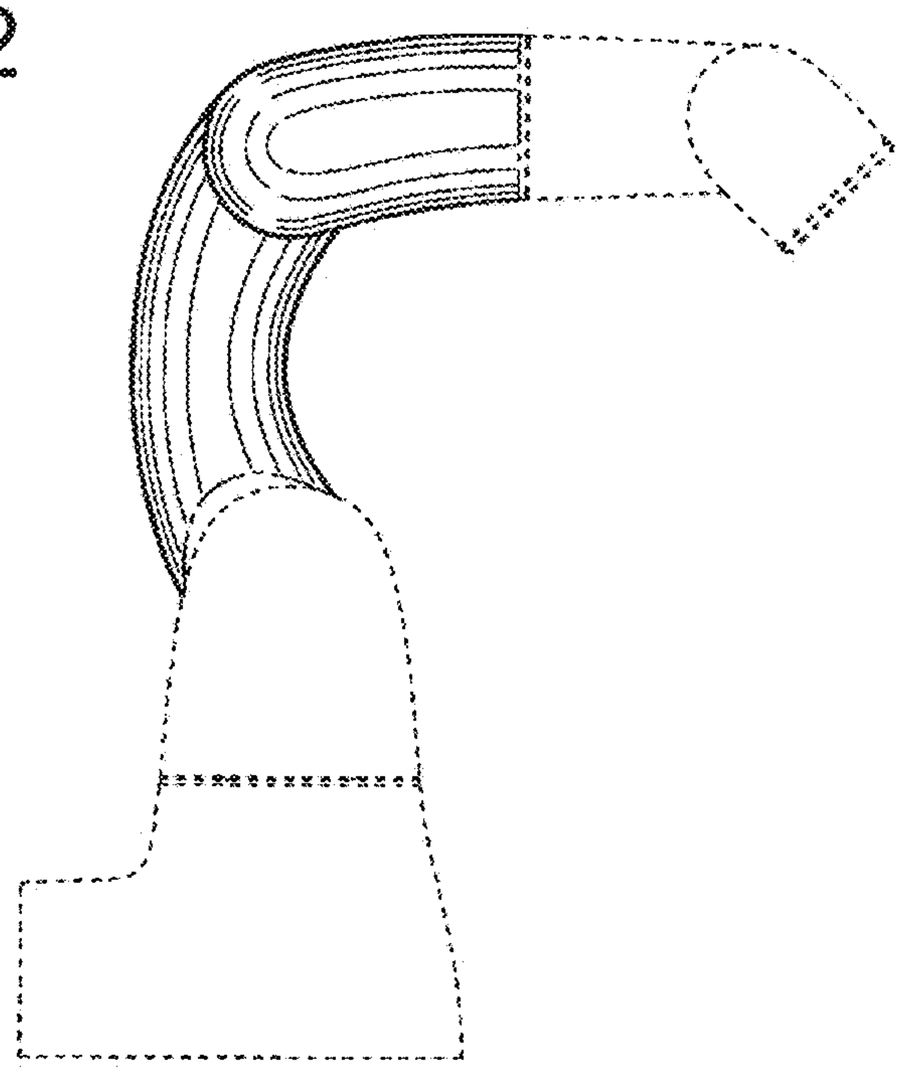

FIG. 3

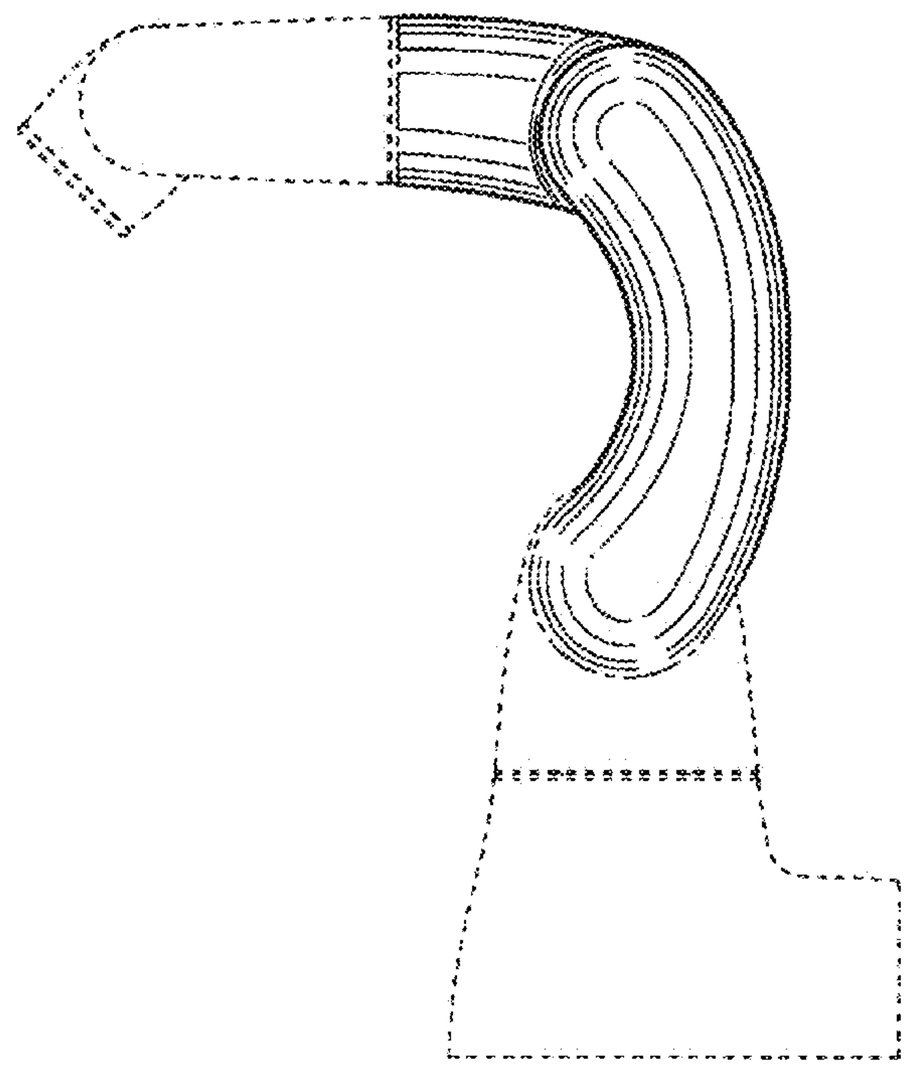

FIG. 4

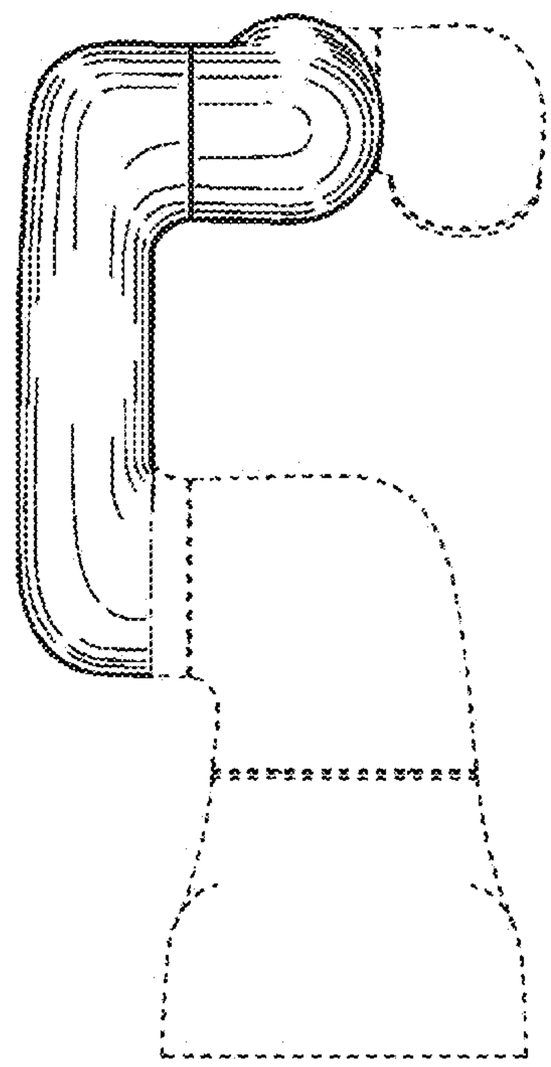

FIG. 5

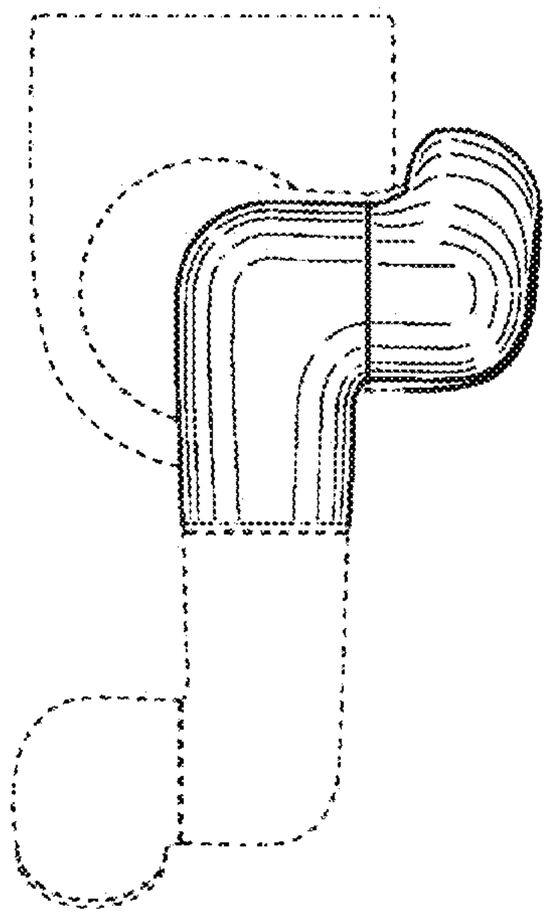

FIG. 6

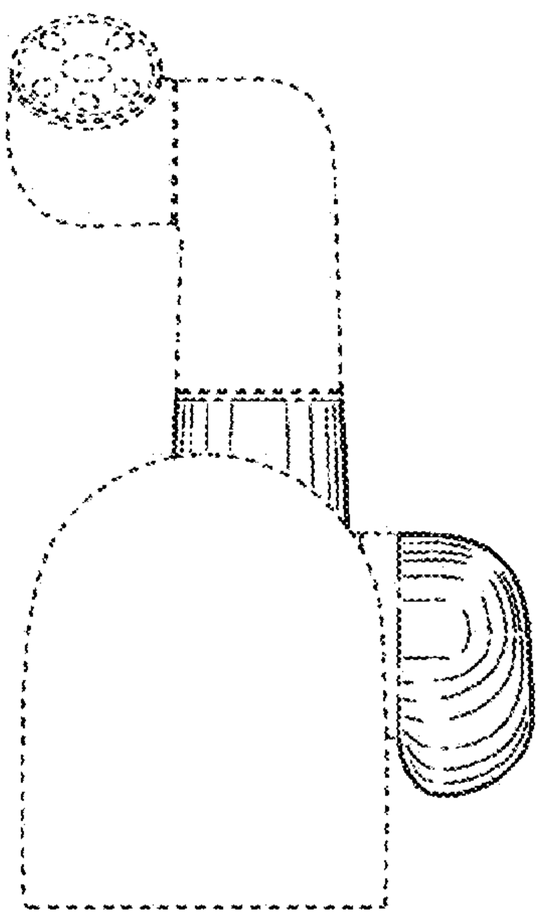

FIG. 7

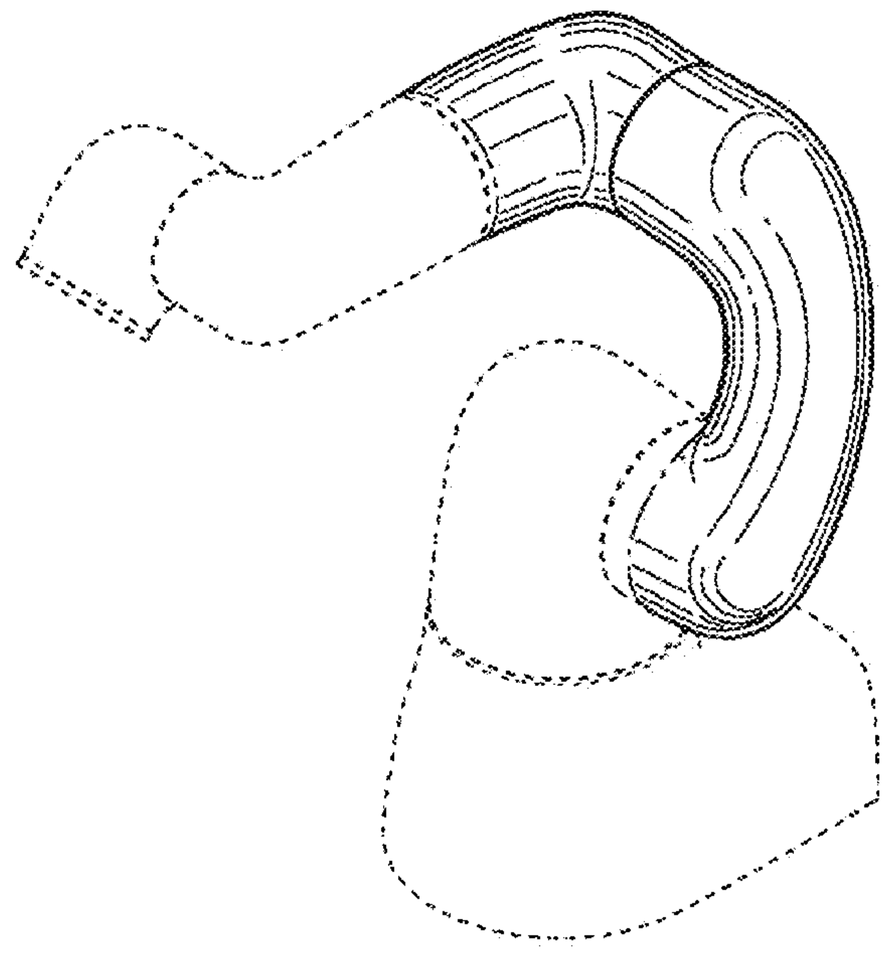

FIG. 8

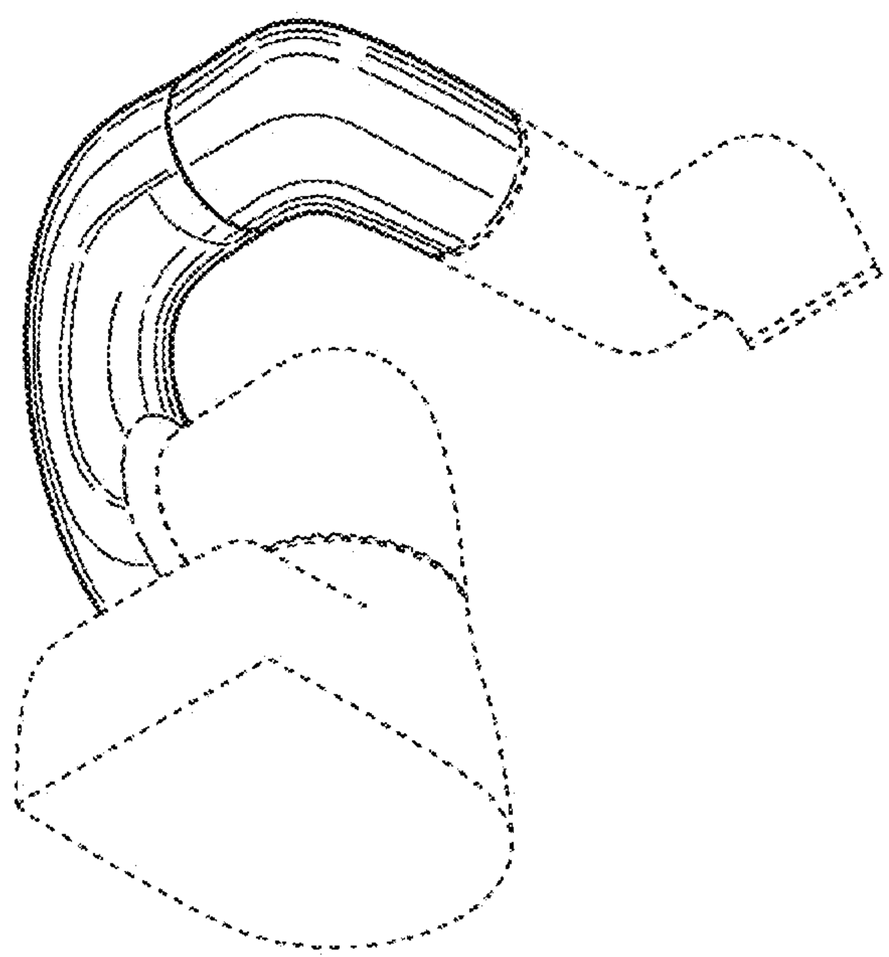

FIG. 9

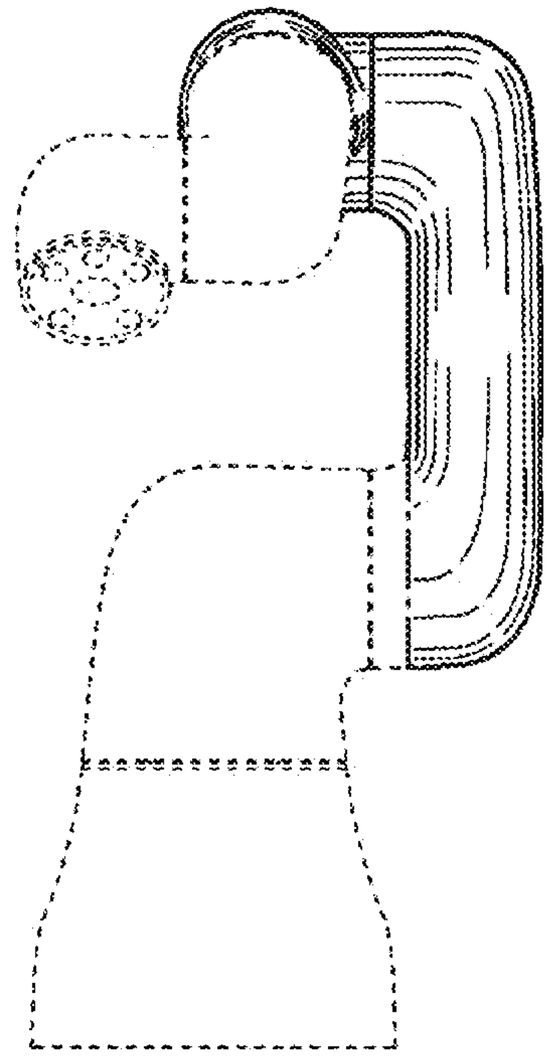

FIG. 10

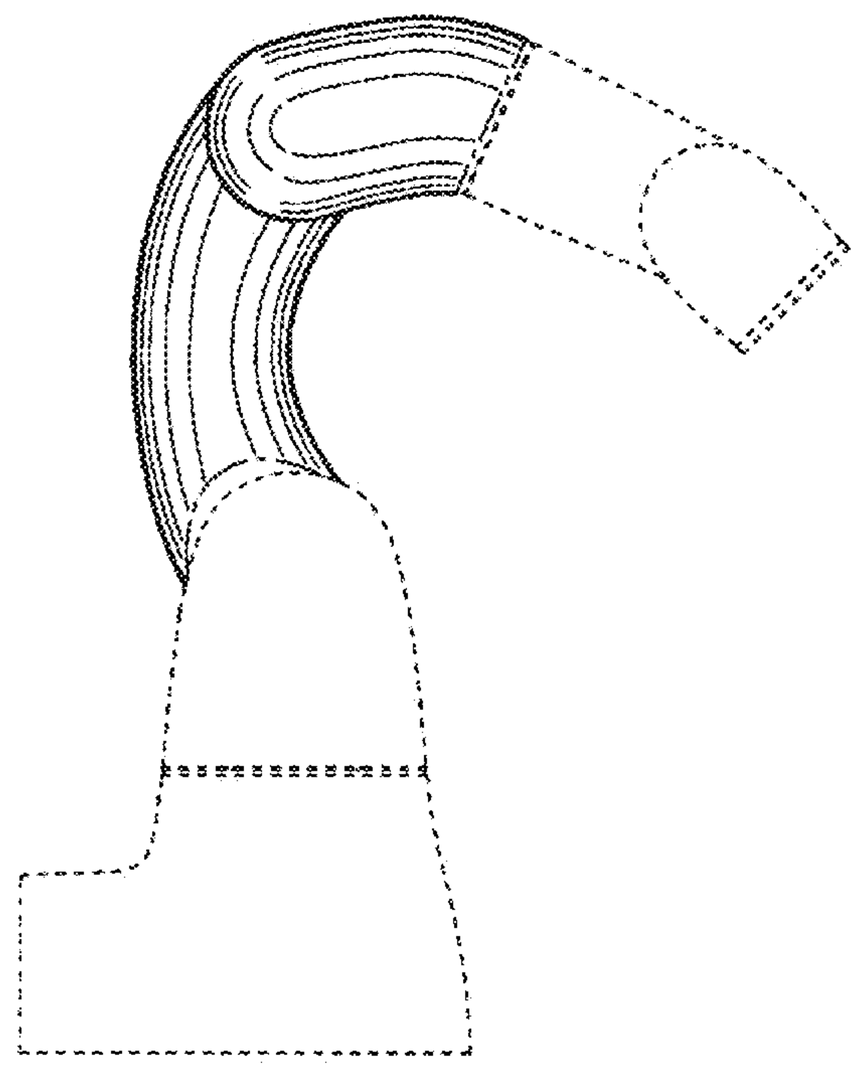

FIG. 11

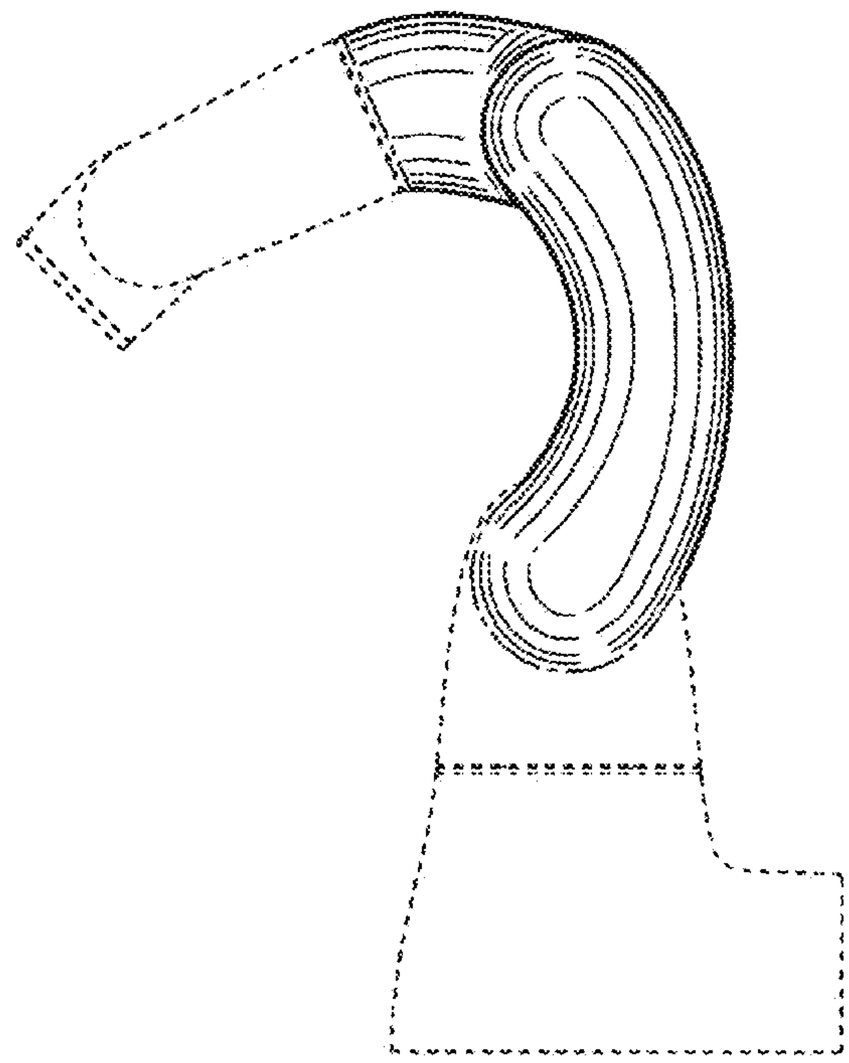

FIG. 12

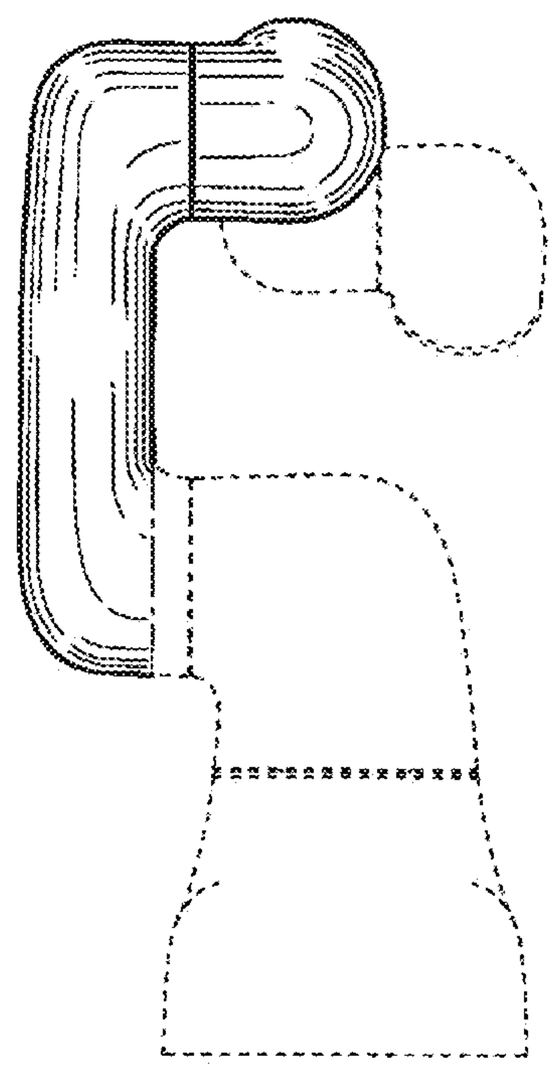

FIG. 13

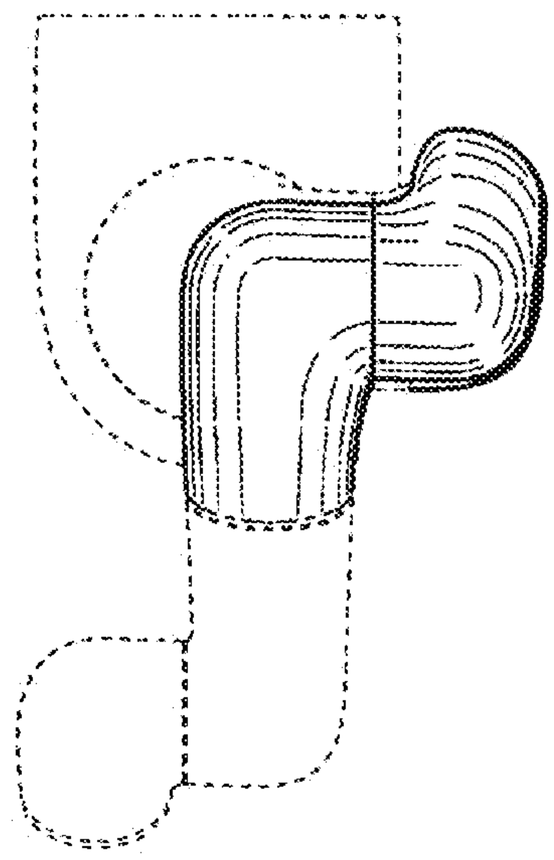

FIG. 14

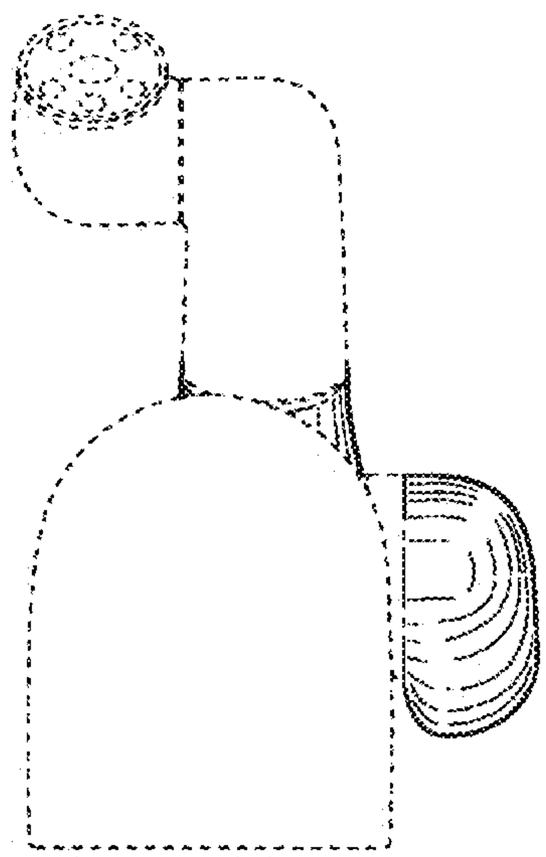

FIG. 15

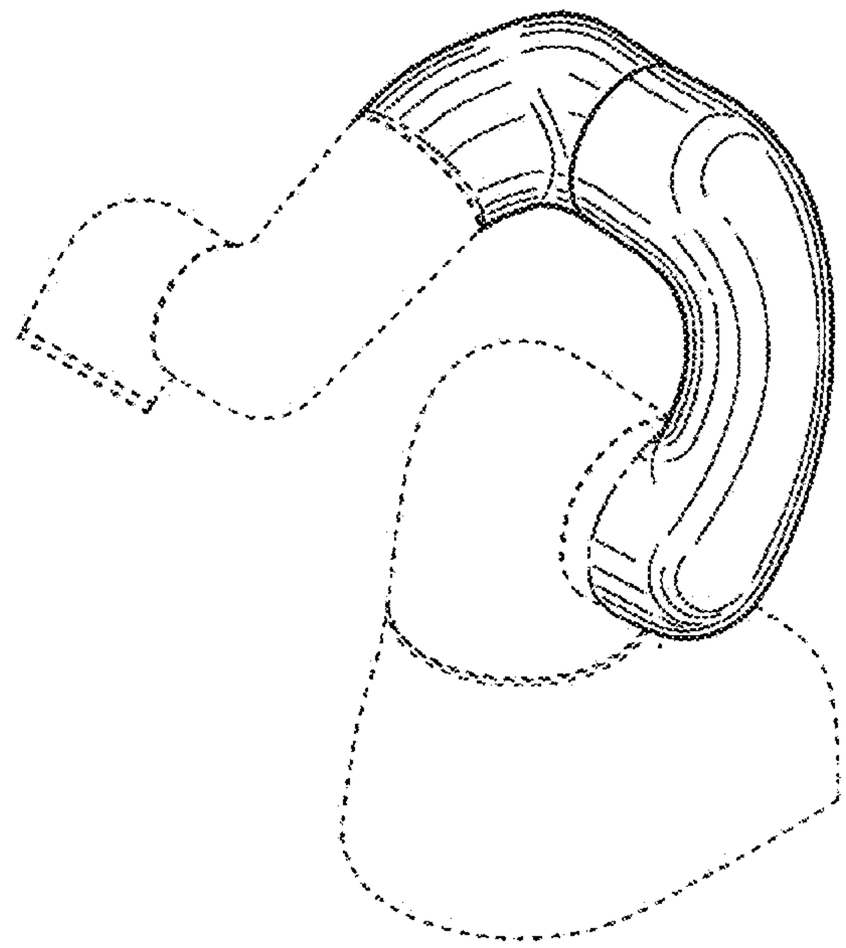

FIG. 16

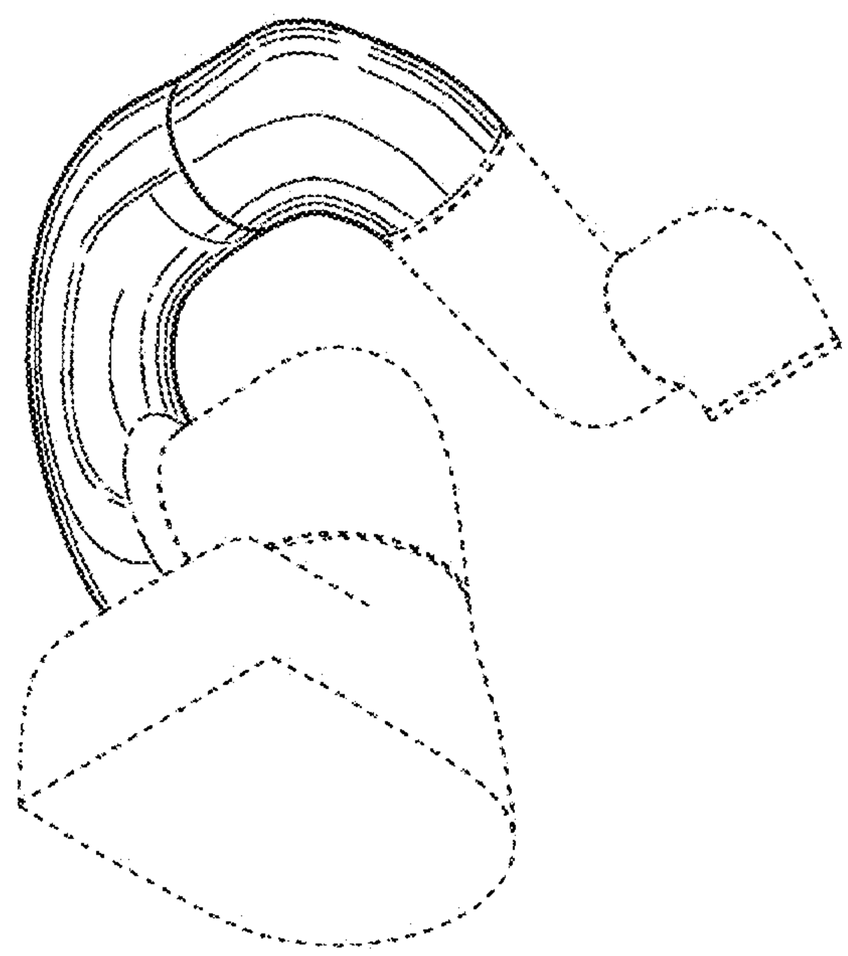

FIG. 17

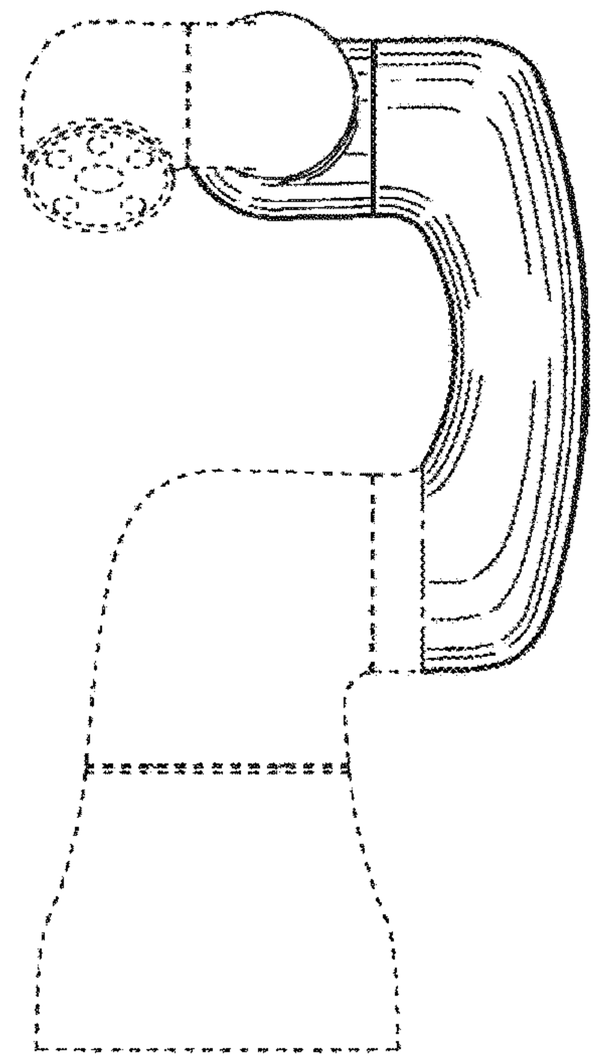

FIG. 18

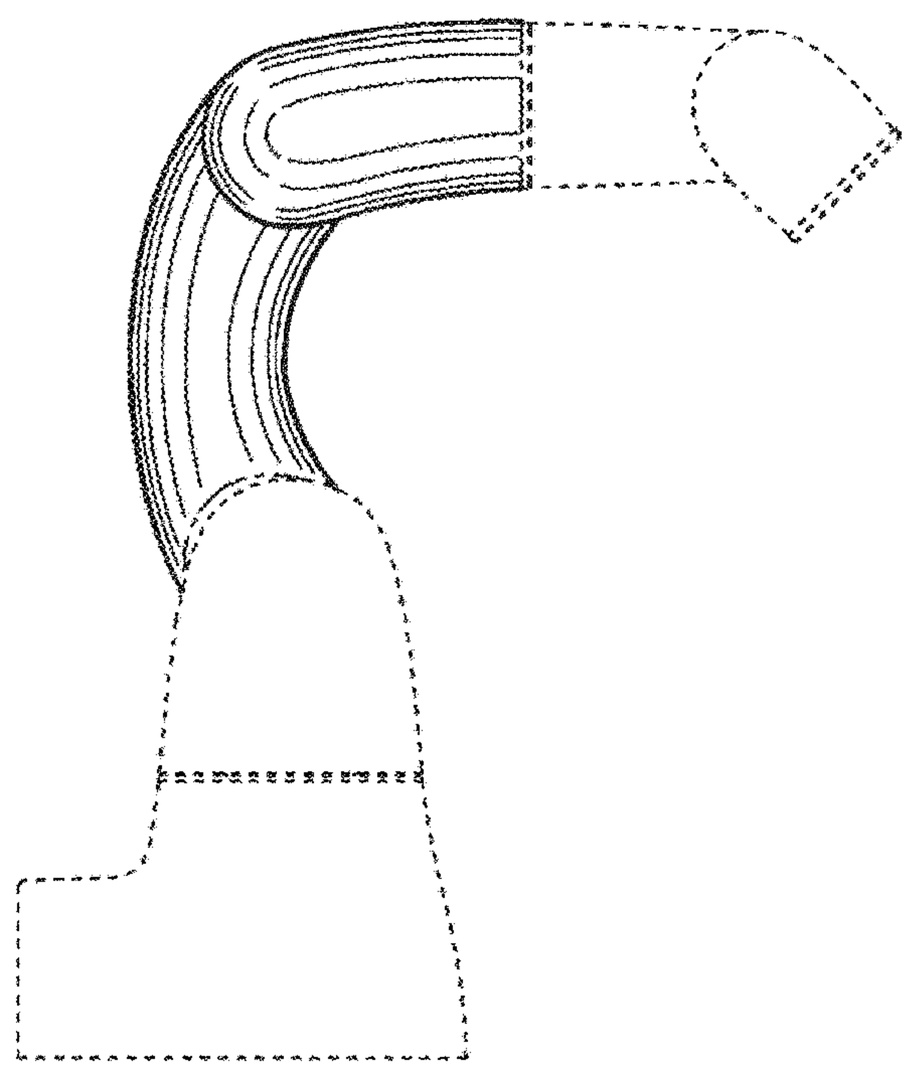

FIG. 19

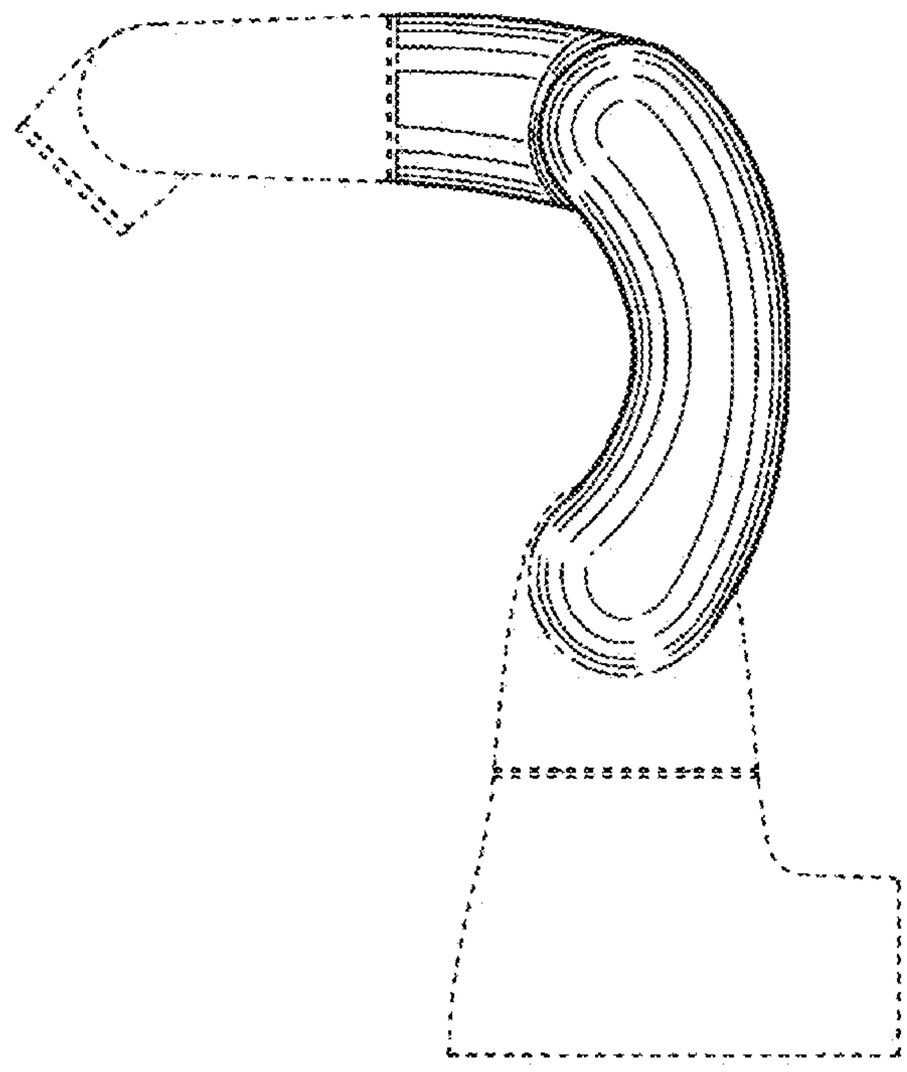

FIG. 20

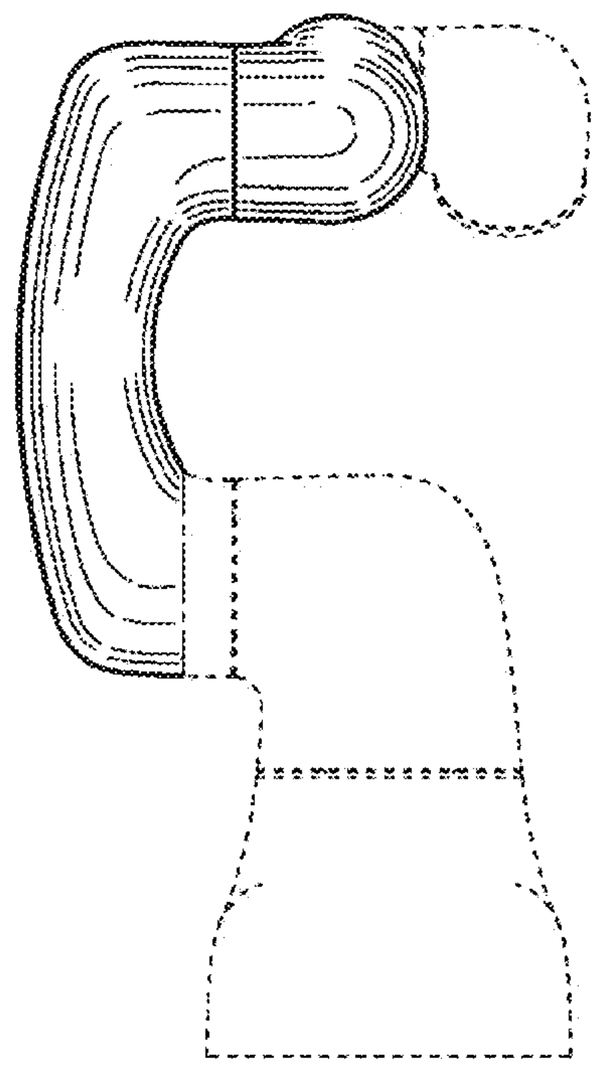

FIG. 21

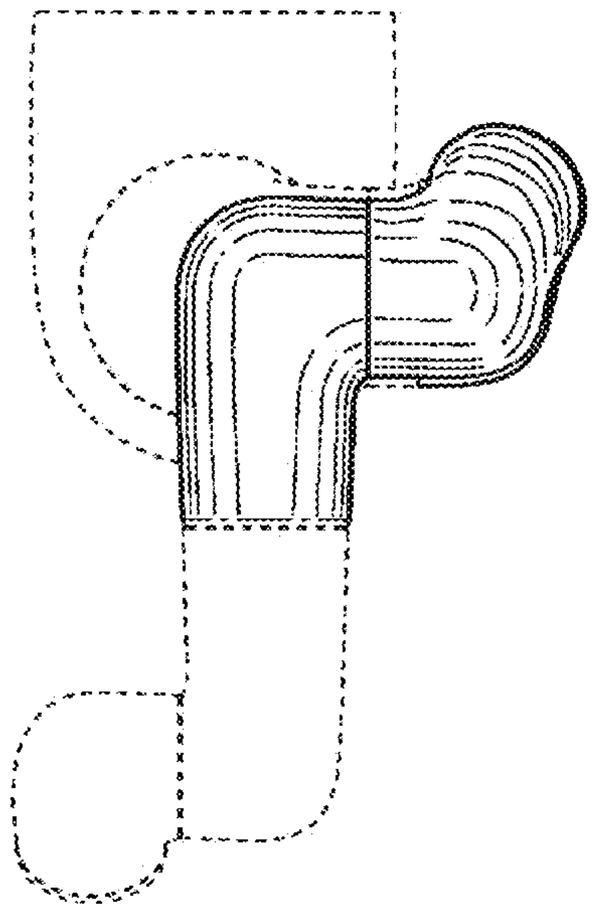

FIG. 22

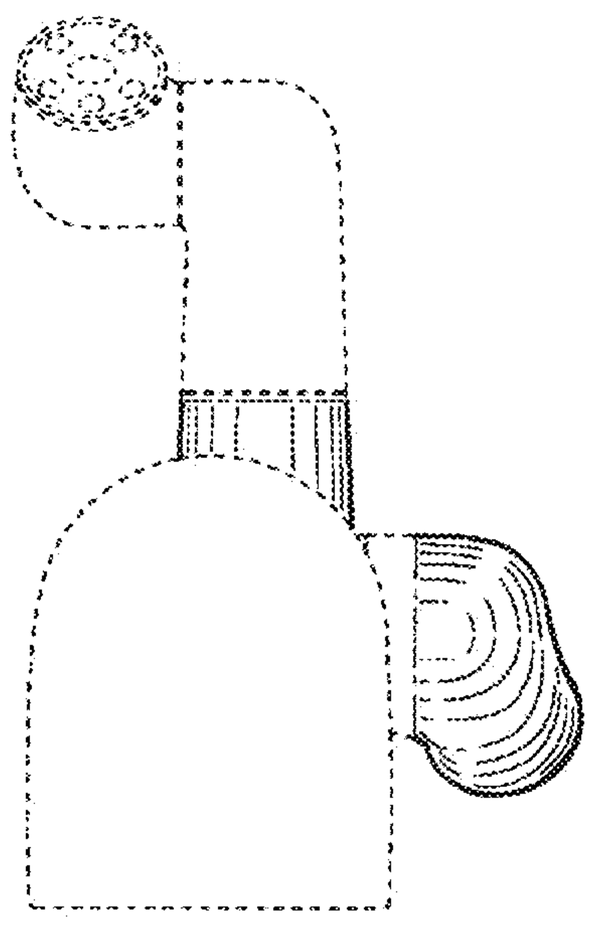

FIG. 23

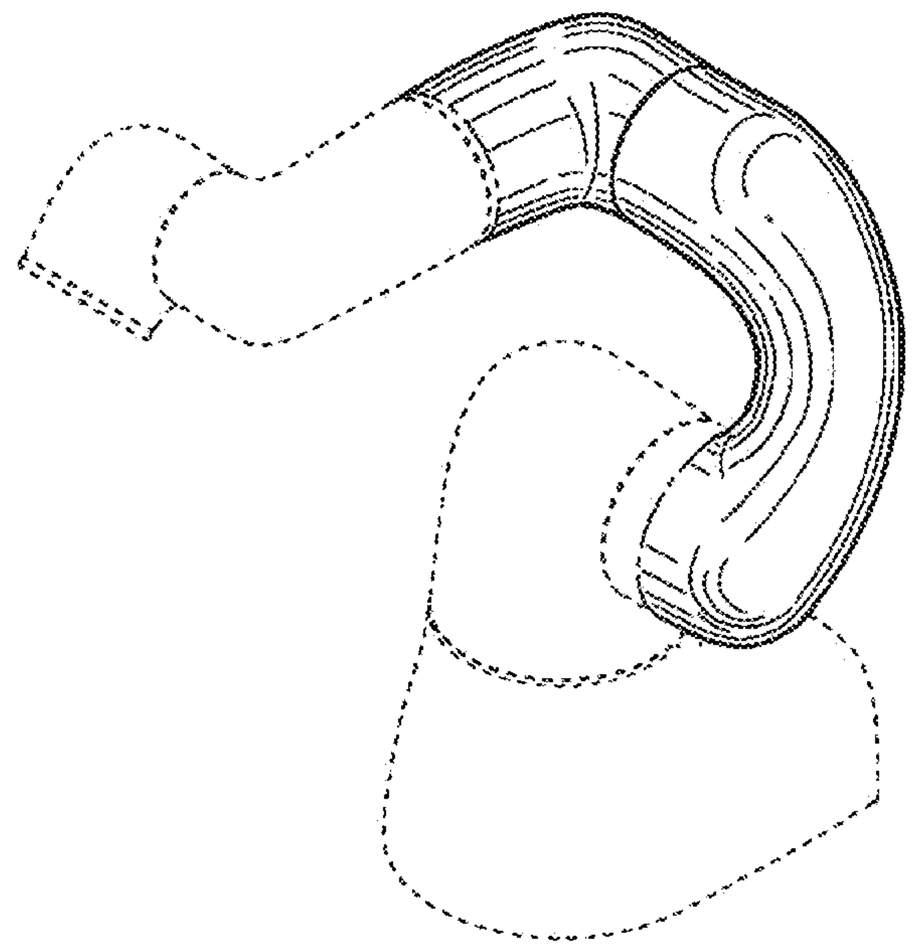
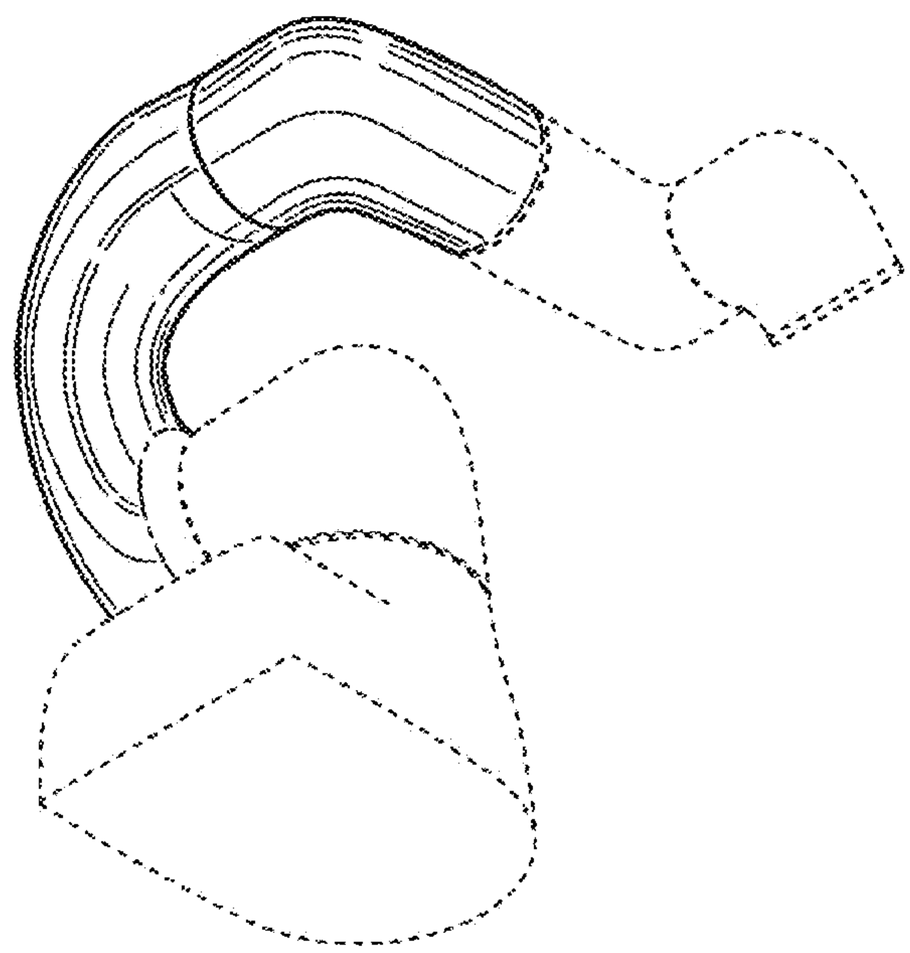
FIG. 24