US00D830699S

(12) United States Design Patent

Liu

(10) Patent No.: US D830,699 S
(45) Date of Patent: ** Oct. 16, 2018

(54) **BRUSH HEAD FOR AN ELECTRIC TOOTHBRUSH**

(71) Applicant: **Harria Investment Group Ltd**, Causeway Bay (HK)

(72) Inventor: **Xinlan Liu**, Rowland Heights, CA (US)

(73) Assignee: **Harria Investment Group Ltd.**, Causeway Bay (HK)

(**) Term: **15 Years**

(21) Appl. No.: **29/592,902**

(22) Filed: **Feb. 3, 2017**

(51) **LOC (11) Cl.** **04-02**

(52) **U.S. Cl.**
USPC **D4/101**

(58) **Field of Classification Search**
USPC D4/101, 104, 105, 108, 110, 111; D24/111, 152, 176
CPC A46B 5/00; A46B 5/021; A46B 5/023; A46B 5/026; A46B 5/028; A46B 5/0016; A46B 5/0095; A46B 13/00; A46B 13/02; A46B 2200/10; A46B 2200/30; A46B 2200/108; A46B 2200/302; A46B 2200/304; A46B 2200/1066; A46B 2200/1073; A46B 2200/1086; A46B 2200/3026; A46B 2200/3033; A46B 2200/3046; A61C 15/00; A61C 15/047; A61C 15/048; A61C 17/16; A61C 17/22; A61C 17/26
See application file for complete search history.

(56) **References Cited**

U.S. PATENT DOCUMENTS

D297,784 S * 9/1988 Moret 15/176.6
D361,433 S * 8/1995 Yang D4/101
5,577,285 A 11/1996 Drossler
D385,702 S * 11/1997 Okada D4/101
6,018,840 A 2/2000 Guay et al.
6,021,538 A 2/2000 Kressner et al.
6,058,541 A 5/2000 Masterman et al.
6,094,769 A 8/2000 Driesen et al.
6,141,819 A 11/2000 Driesen et al.
6,195,828 B1 3/2001 Fritsch
6,308,359 B2 10/2001 Fritsch et al.
D452,775 S * 1/2002 Wright D4/101
(Continued)

FOREIGN PATENT DOCUMENTS

EP 2550938 A1 * 1/2013 ..... A61C 17/3436
JP 2016152936 A * 8/2016 ..... A61C 17/3436

Primary Examiner — Wan Laymon
Assistant Examiner — Clint A Samuel
(74) *Attorney, Agent, or Firm* — Fox Rothschild LLP

(57) **CLAIM**

The ornamental design for a brush head for an electric toothbrush, as shown and described.

DESCRIPTION

FIG. **1** illustrates a side perspective view of a brush head for an electric toothbrush.
FIG. **2** illustrates a first side of the brush head for an electric toothbrush.
FIG. **3** illustrates a second side of the brush head for an electric toothbrush.
FIG. **4** illustrates a third side of the brush head for an electric toothbrush.
FIG. **5** illustrates a fourth side of the brush head for an electric toothbrush.
FIG. **6** is a top plan view of the brush head for an electric toothbrush; and,
FIG. **7** is a bottom plan view of the brush head for an electric toothbrush.
The broken lines shown in drawings are included for the purpose of illustrating unclaimed portions of the brush head for an electric toothbrush and environmental structure, and form no part of the claimed design.

1 Claim, 4 Drawing Sheets

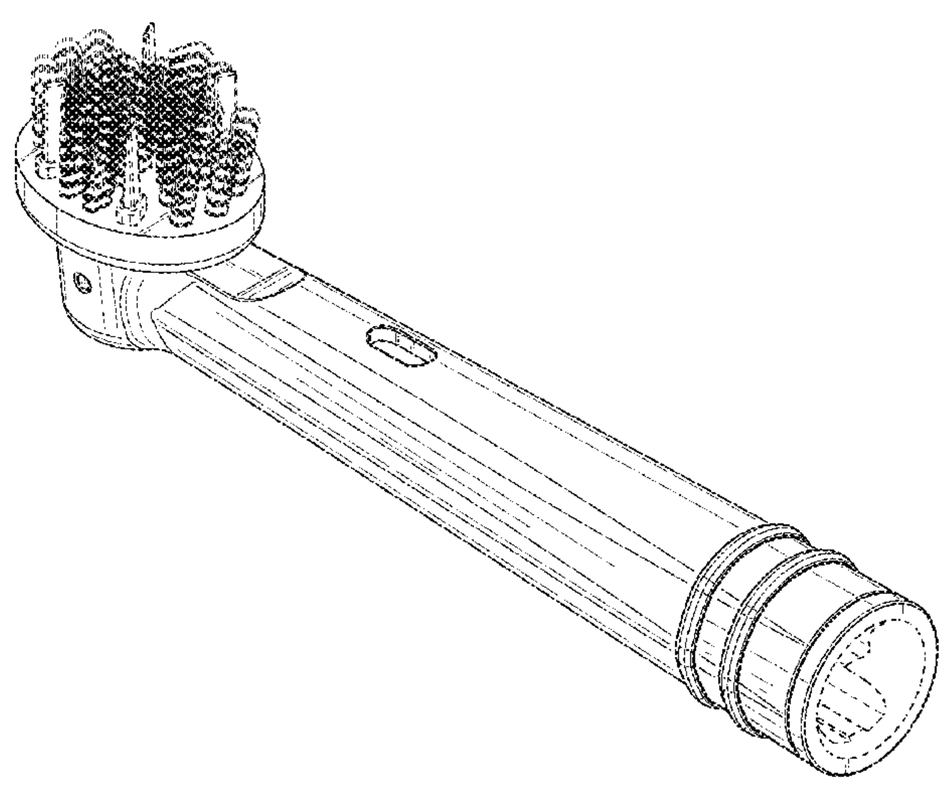

(56) **References Cited**

U.S. PATENT DOCUMENTS

6,349,442	B1 *	2/2002	Cohen	A61C 17/22	15/22.1
D455,556	S *	4/2002	Kling	D4/101	
6,367,108	B1	4/2002	Fritsch et al.		
D459,892	S *	7/2002	Eliav	D4/101	
6,475,553	B2	11/2002	Guay et al.		
D474,894	S *	5/2003	Ferber	D4/101	
D475,529	S *	6/2003	Wright	D4/101	
6,588,042	B2	7/2003	Fritsch et al.		
6,665,901	B2	12/2003	Driesen et al.		
D487,636	S *	3/2004	De Salvo	D4/101	
D489,534	S *	5/2004	Hensel	D4/101	
6,785,929	B2	9/2004	Fritsch et al.		
6,871,373	B2	3/2005	Driesen et al.		
D526,487	S *	8/2006	Chenvainu	D4/101	
D527,185	S *	8/2006	Vu	D4/101	
D527,905	S *	9/2006	Winkler	D4/101	
D563,674	S	3/2008	Beedham		
D569,623	S	5/2008	Beedham		
D579,664	S *	11/2008	Fisher	D4/101	
D580,173	S	11/2008	Beedham		
D599,555	S *	9/2009	Oliphant	D4/101	
D600,920	S *	9/2009	Yeh	D19/125	
D607,646	S *	1/2010	Ino	D4/101	
D611,712	S *	3/2010	Stoerkel	D4/104	
D612,611	S *	3/2010	Brown, Jr.	D4/101	
7,690,067	B2	4/2010	Schaefer et al.		
7,941,886	B2	5/2011	Chenvainu et al.		
D643,218	S *	8/2011	Wagner	D4/101	
D648,539	S *	11/2011	Wai	D4/101	
D648,941	S *	11/2011	Leung	D4/101	
D653,035	S	1/2012	Gebski		
D657,565	S	4/2012	Gebski		
8,209,808	B2	7/2012	Kressner		
8,220,097	B2	7/2012	DePuydt et al.		
D676,660	S *	2/2013	Crossman	D4/101	
8,453,288	B2	6/2013	Driesen et al.		
D688,045	S *	8/2013	Key	D4/101	
D688,464	S *	8/2013	Hara	D4/101	
D689,698	S *	9/2013	Dickie	D4/101	
D696,023	S *	12/2013	Gebski	D4/101	
D696,517	S	12/2013	Gebski		
8,621,698	B2	1/2014	Chenvainu et al.		
8,661,597	B2	3/2014	Kressner		
8,782,841	B2	7/2014	Sale et al.		
8,813,292	B2	8/2014	Driesen et al.		
D718,057	S	11/2014	Massee et al.		
D719,737	S *	12/2014	Adriaenssen	D4/101	
D743,173	S *	11/2015	Sohn	D4/101	
9,204,948	B2	12/2015	Kloster		
D747,609	S *	1/2016	Watkins	D4/101	
D751,821	S *	3/2016	Since	D4/101	
D759,380	S *	6/2016	Watkins	D4/101	
D759,381	S *	6/2016	Watkins	D4/101	
D759,383	S *	6/2016	Watkins	D4/101	
9,392,867	B2	7/2016	Bresselschmidt		
9,420,877	B2	8/2016	Wen et al.		
D766,580	S *	9/2016	Kollar	D4/101	
D767,895	S *	10/2016	Stebila	D4/101	
D769,626	S *	10/2016	Bloch	D4/101	
D771,952	S *	11/2016	Sedic	D4/104	
D773,192	S *	12/2016	Nabavi	D4/101	
D773,822	S *	12/2016	Sikora	D4/101	
D774,772	S *	12/2016	Sedic	D4/101	
D774,773	S *	12/2016	Sedic	D4/101	
D775,469	S *	1/2017	Sikora	D4/102	
D775,836	S *	1/2017	Sedic	D4/101	
D776,438	S *	1/2017	Sedic	D4/111	
D778,057	S *	2/2017	Sohn	D4/101	
D780,455	S *	3/2017	Kandemir	D4/101	
D787,189	S *	5/2017	Fretwell	D4/101	
D794,336	S *	8/2017	Zavalloni	D4/101	
D795,590	S *	8/2017	Sedic	D4/101	
D799,217	S *	10/2017	Massee	D4/101	
D799,218	S *	10/2017	Okai	D4/104	
D799,835	S *	10/2017	Okai	D4/101	
D801,696	S *	11/2017	McGarry	D4/101	
9,827,079	B1 *	11/2017	Liu	A61C 17/222	
D805,306	S *	12/2017	Massee	D4/101	
2002/0100134	A1 *	8/2002	Dunn	A46B 5/00	15/167.1
2002/0157198	A1 *	10/2002	Biro	A46B 13/008	15/22.1
2003/0031979	A1 *	2/2003	Shortt	A61C 17/22	433/118
2003/0101526	A1 *	6/2003	Hilscher	A61C 17/22	15/22.1
2011/0010874	A1 *	1/2011	Dickie	A46B 5/0062	15/22.1
2013/0007969	A1 *	1/2013	Driesen	A61C 17/3436	15/28
2013/0133683	A1 *	5/2013	Guthans	A45D 6/04	132/237
2013/0333126	A1	12/2013	Miller		
2014/0101871	A1	4/2014	Chenvainu et al.		
2015/0173502	A1 *	6/2015	Sedic	A46B 9/04	15/22.1
2016/0287363	A1 *	10/2016	Miller	A61C 17/221	
2016/0374609	A1 *	12/2016	Vetter	A61C 17/16	433/27
2017/0042638	A1 *	2/2017	Lee	A61C 17/028	
2017/0151044	A1 *	6/2017	Okai	A61C 17/222	

* cited by examiner

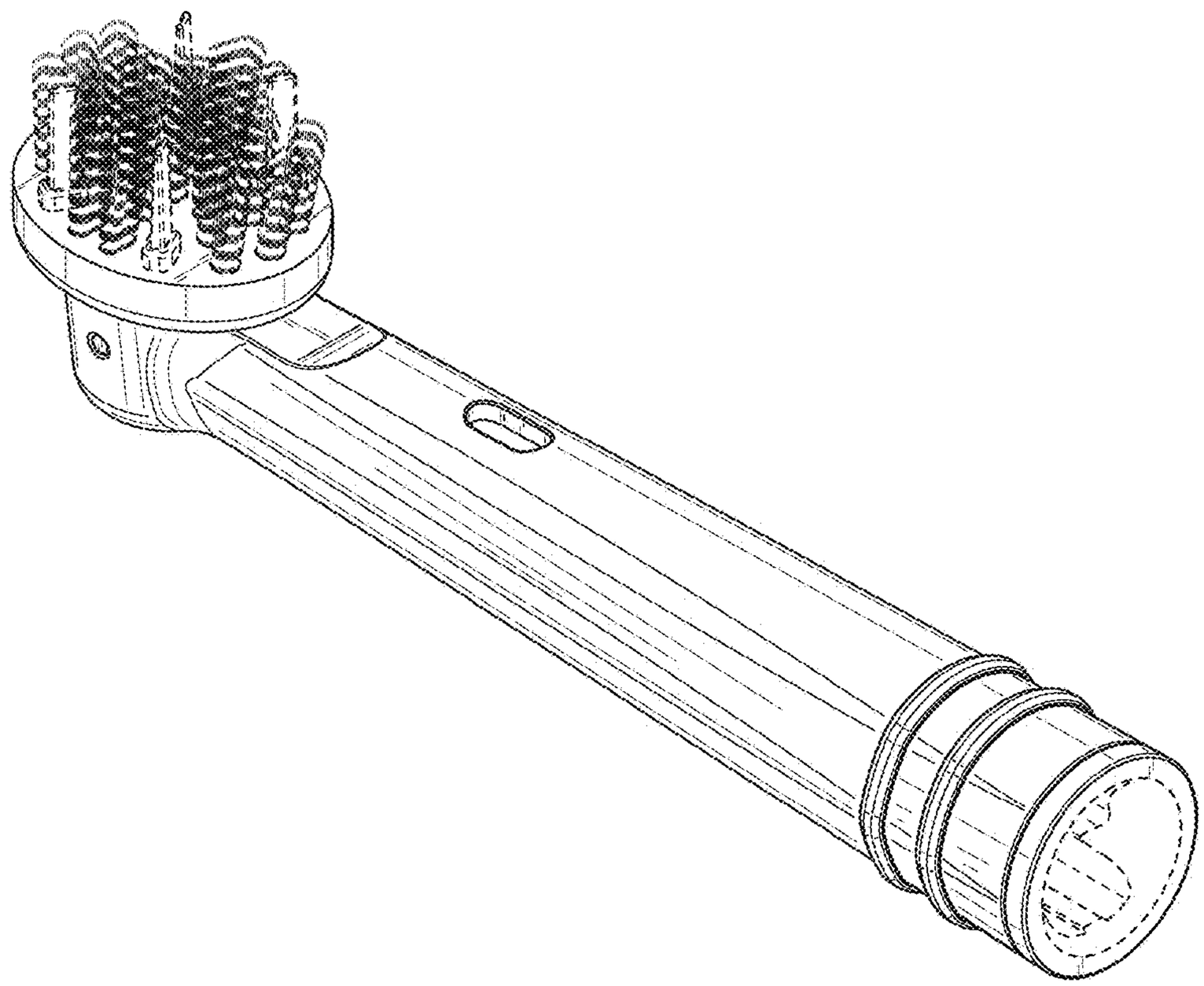

FIG. 1

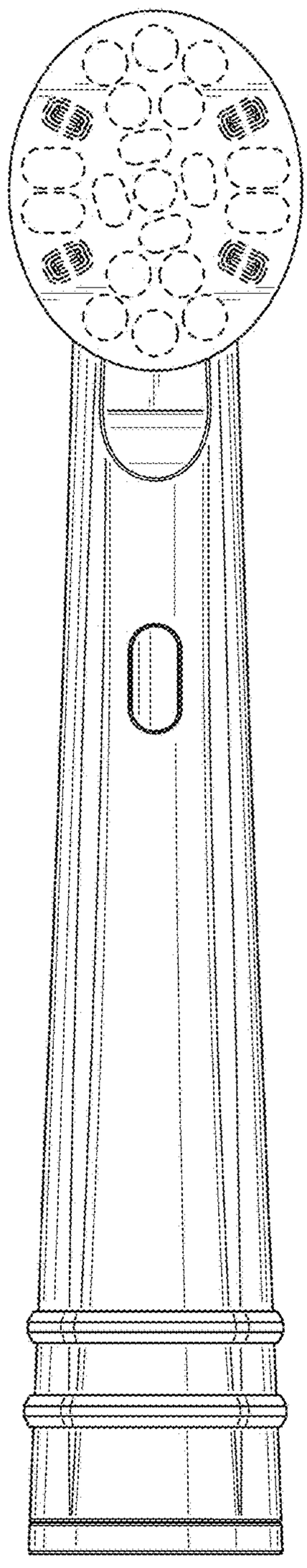

FIG. 2

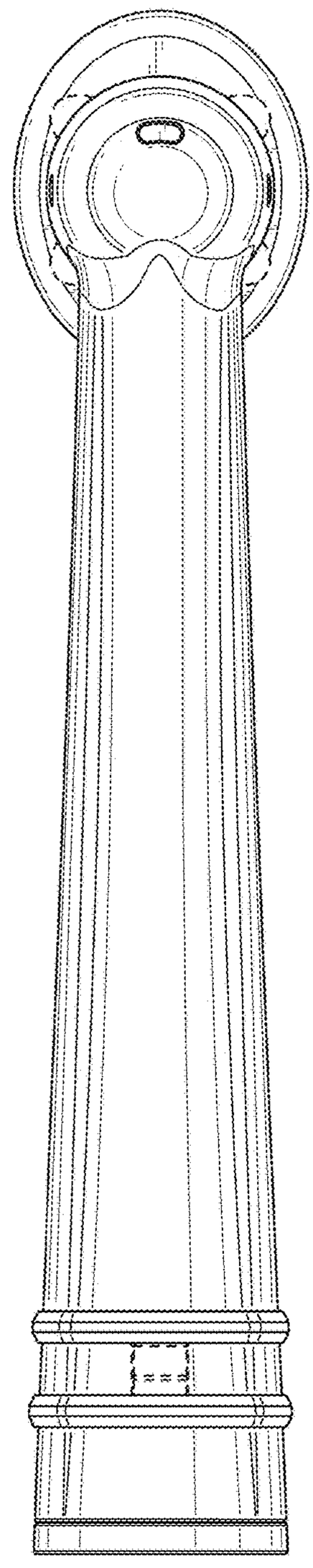

FIG. 3

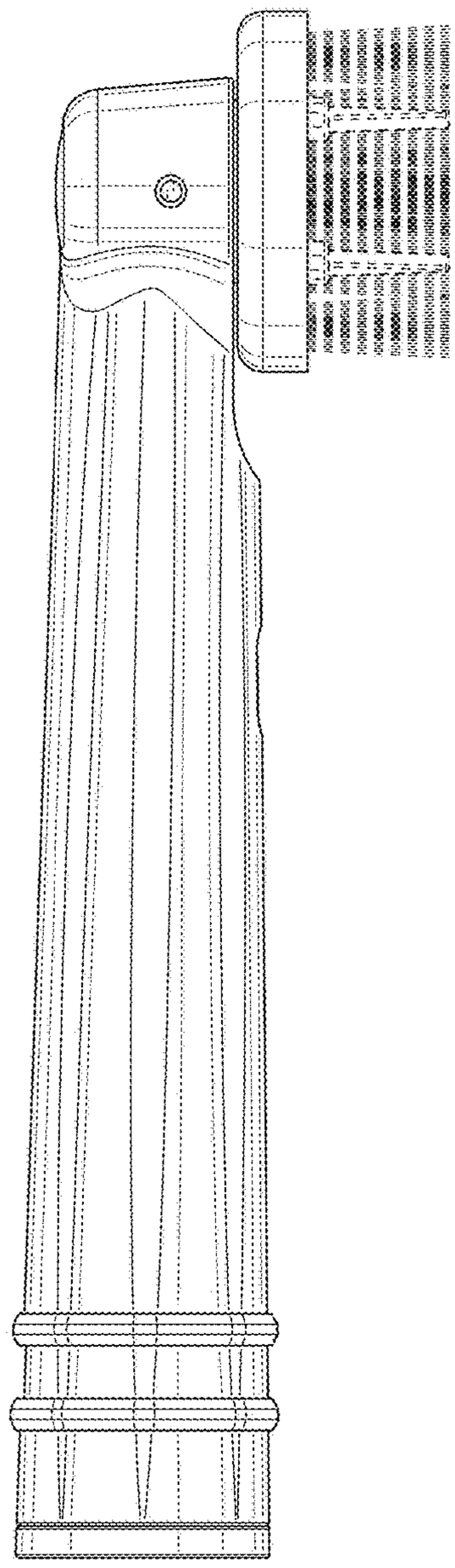

FIG. 4

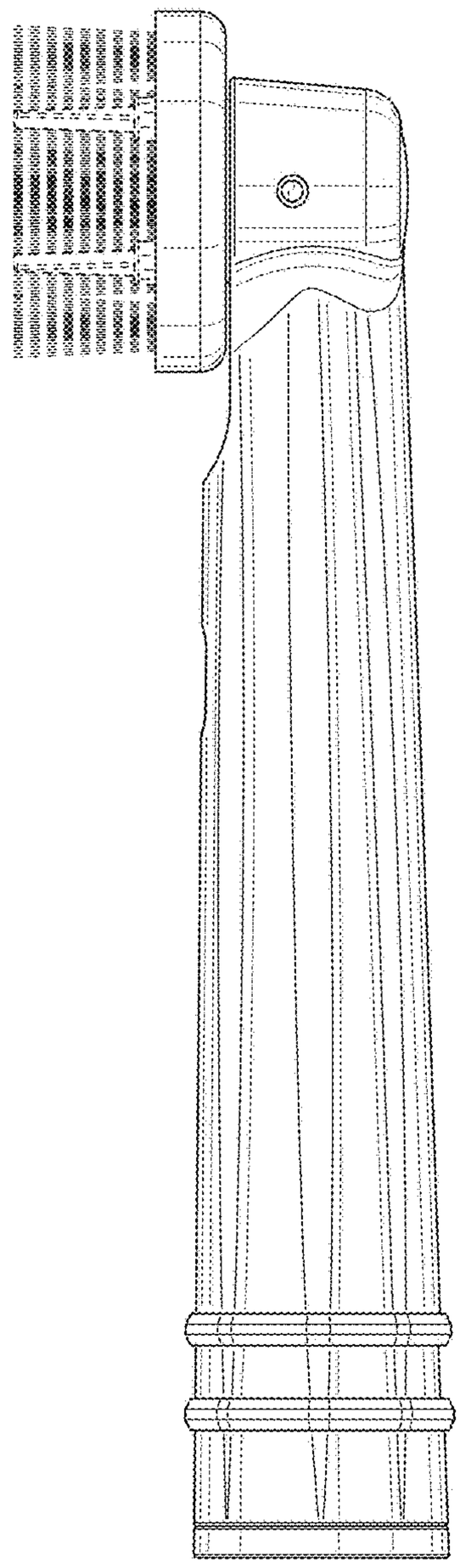

FIG. 5

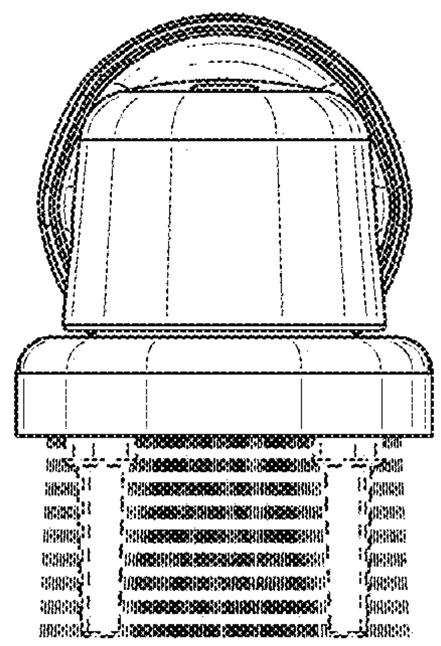

FIG. 6

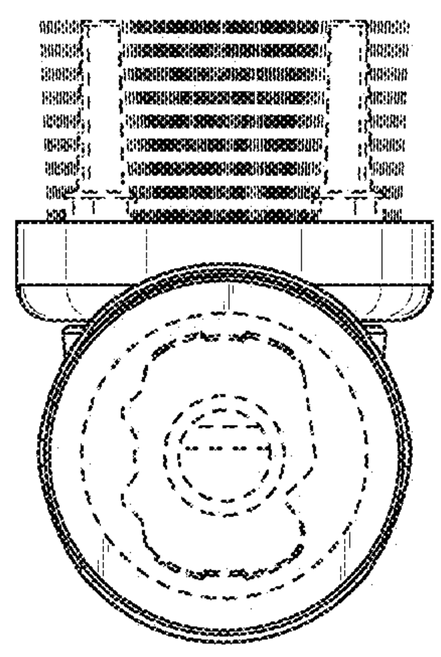

FIG. 7