US00D830649S

(12) United States Design Patent

Hedlund

(10) Patent No.: US D830,649 S
(45) Date of Patent: ** Oct. 9, 2018

(54) **VENT PROTECTING STIFFENER FOR A DAIRY ANIMAL MILKER UNIT TUBE**

(71) Applicant: **GEA Farm Technologies, Inc.**, Naperville, IL (US)

(72) Inventor: **Nathan Hedlund**, Galesville, WI (US)

(73) Assignee: **GEA Farm Technologies, Inc.**, Naperville, IL (US)

(**) Term: **15 Years**

(21) Appl. No.: **29/553,214**

(22) Filed: **Jan. 29, 2016**

(30) **Foreign Application Priority Data**

Jan. 28, 2016 (EP) 001444970

(51) **LOC (11) Cl.** **30-99**

(52) **U.S. Cl.**
USPC **D30/199**

(58) **Field of Classification Search**
USPC D30/199, 121; 119/14.01–14.55; 702/182
CPC .. A01J 1/00–7/005; A01K 1/12; A01K 1/123; A01K 1/126
See application file for complete search history.

(56) **References Cited**

U.S. PATENT DOCUMENTS

1,301,992	A	4/1919	Anderson	
2,099,884	A	2/1936	Green	
2,321,236	A *	6/1943	Parkin	A61J 9/04 137/512.1

(Continued)

FOREIGN PATENT DOCUMENTS

CA	2500708	4/2004
EP	1549134	6/2013

(Continued)

OTHER PUBLICATIONS

American Society of Agricultural Engineers. Terminology for Milking Machines, Milk Cooling, and Bulk Milk Handling Equipment. Jul. 3, 1996.

(Continued)

Primary Examiner — Susan Moon Lee
(74) *Attorney, Agent, or Firm* — Smith Law Office; Jeffry W. Smith

(57) **CLAIM**

The ornamental design for a vent protecting stiffener for a dairy animal milker unit tube, as shown and described.

DESCRIPTION

FIG. **1** is a front elevational view of a vent protecting stiffener for a dairy animal milker unit tube;
FIG. **2** is a side elevational view thereof;
FIG. **3** is an enlarged front elevational view of the vent protecting stiffener for a dairy animal milker unit tube;
FIG. **4** is a right side view thereof, the left side view being a mirror image;
FIG. **5** is a bottom view thereof, the top view being a mirror image;
FIG. **6** is a front, bottom, and right side isometric view thereof;
FIG. **7** is a front, right, and top isometric view thereof;
FIG. **8** is a front, top, and left side isometric view thereof;
FIG. **9** is a front and left side isometric view thereof; and,
FIG. **10** is a front, left, and bottom isometric view thereof.
The exemplary broken line depiction of a milker unit liner with a short milk tube and vent plug, are shown for purposes of illustration only, and forms no part of the design claim.

1 Claim, 5 Drawing Sheets

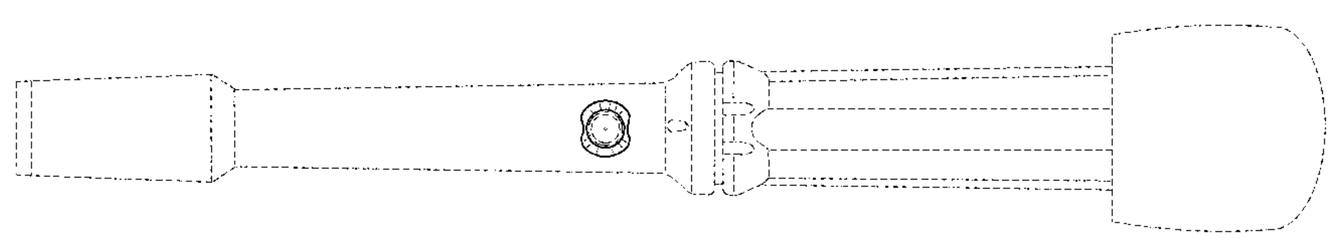

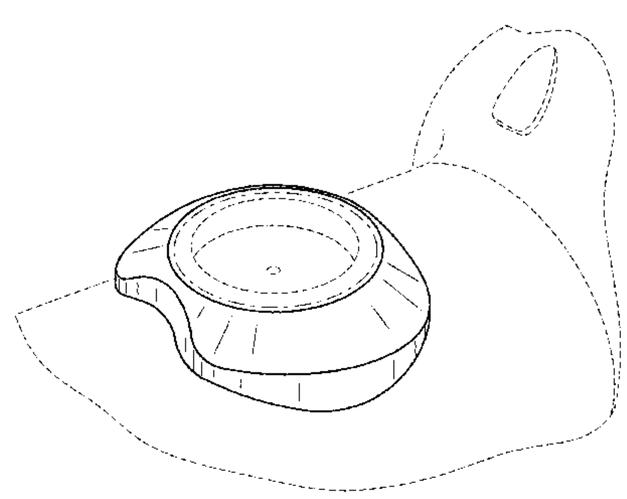

(56) **References Cited**

U.S. PATENT DOCUMENTS

2,341,953 A 2/1944 Scott
2,513,627 A 7/1950 Dinesen
2,664,809 A * 1/1954 Morell E04B 1/7076 454/271
3,014,455 A * 12/1961 Olander A01J 5/013 119/14.54
3,074,837 A 1/1963 Flax
3,079,891 A 3/1963 Miller
3,476,085 A 11/1969 Noorlander
3,659,558 A 5/1972 Noorlander
3,713,423 A 1/1973 Sparr
3,999,516 A 12/1976 Shulick
4,043,739 A 8/1977 Appel
4,090,471 A 5/1978 Thompson
4,196,696 A 4/1980 Olander
4,303,038 A * 12/1981 Thompson A01J 5/08 119/14.36
4,324,201 A 4/1982 Larson
4,441,454 A 4/1984 Happel et al.
4,459,938 A * 7/1984 Noorlander A01J 5/08 119/14.49
4,481,906 A * 11/1984 Steingraber A01J 7/005 119/14.32
4,593,649 A * 6/1986 Britten A01J 5/0133 119/14.08
4,604,969 A 8/1986 Larson
4,745,881 A 5/1988 Larson
4,869,205 A 9/1989 Larson
4,907,535 A * 3/1990 Matsuzawa A01J 5/041 119/14.55
5,007,378 A 4/1991 Larson
5,069,162 A * 12/1991 Thompson A01J 5/08 119/14.47
5,482,004 A 1/1996 Chowdhury
5,493,995 A 2/1996 Chowdhury
5,572,947 A 11/1996 Larson et al.
6,009,834 A * 1/2000 Krone A01J 5/08 119/14.47
6,039,001 A * 3/2000 Sanford A01J 5/08 119/14.47
6,055,931 A 5/2000 Sanford, Jr.
6,142,098 A 11/2000 Van Den Berg
6,276,297 B1 * 8/2001 van den Berg A01J 7/025 119/14.01
6,302,058 B1 10/2001 Dahl et al.
6,439,157 B1 8/2002 Petterson
6,598,560 B1 * 7/2003 van den Berg A01J 5/007 119/14.08
6,755,153 B1 * 6/2004 Chowdhury A01J 5/08 119/14.47
6,796,272 B1 * 9/2004 Chowdhury A01J 5/08 119/14.46
6,895,892 B2 5/2005 Sellner et al.
6,899,055 B2 * 5/2005 Alveby A01J 5/044 119/14.47
7,290,497 B2 * 11/2007 Rottier A01J 5/044 119/14.02
7,540,258 B2 * 6/2009 Boast A01J 5/08 119/14.02
8,033,247 B2 * 10/2011 Torgerson A01J 7/04 119/14.47
8,056,505 B2 11/2011 Laney et al.
8,176,872 B2 5/2012 Crespo
8,485,129 B2 7/2013 Wulle et al.
8,627,785 B2 1/2014 Grace et al.
8,677,937 B2 3/2014 Shin
9,138,938 B1 9/2015 Joshi et al.
9,204,616 B2 * 12/2015 Chowdhury A01J 7/00
9,339,004 B2 * 5/2016 La Torre A01J 5/044
9,526,225 B2 12/2016 Kochman et al.
9,635,829 B2 * 5/2017 La Torre A01J 5/044
2004/0089242 A1 * 5/2004 Verstege A01J 5/08 119/14.47
2004/0094096 A1 * 5/2004 Fransen A01J 5/0175 119/14.43
2005/0284378 A1 * 12/2005 Shin A01J 5/08 119/14.47
2005/0284379 A1 12/2005 Shin
2006/0016399 A1 * 1/2006 Torgerson A01J 7/04 119/14.49
2007/0137582 A1 * 6/2007 Boast A01J 5/044 119/14.54
2007/0245965 A1 * 10/2007 Petterson A01J 5/08 119/14.47
2007/0245966 A1 * 10/2007 Pettersson A01J 5/08 119/14.47
2008/0035064 A1 * 2/2008 Petterson A01J 5/08 119/14.47
2008/0252053 A1 * 10/2008 Schneider B60R 21/239 280/742
2008/0276871 A1 * 11/2008 Auburger A01J 5/08 119/14.49
2009/0050061 A1 * 2/2009 Duke A01J 5/08 119/14.02
2009/0050062 A1 * 2/2009 Auburger A01J 5/044 119/14.51
2009/0320760 A1 * 12/2009 Torgerson A01J 7/04 119/14.47
2010/0083903 A1 * 4/2010 Hiley A01J 7/04 119/14.47
2010/0275849 A1 11/2010 Wulle et al.
2011/0132265 A1 6/2011 Laney
2014/0123903 A1 * 5/2014 Priest A01J 5/08 119/14.47
2014/0190416 A1 * 7/2014 Kochman A01J 5/00 119/14.47
2016/0128299 A1 5/2016 Hedlund

FOREIGN PATENT DOCUMENTS

WO 99/66787 12/1999
WO 00/69252 11/2000
WO 02/07506 1/2002
WO 2004/030445 4/2004
WO 2008/031818 3/2008
WO 2016/073861 5/2016

OTHER PUBLICATIONS

International Search Report dated Feb. 4, 2004, PCT/US03/031002, 4 pages.
Jeffry W. Smith's letter sent to Vincent LoTempio of Kloss Stenger & LoTempio sent on Nov. 20, 2015, 14 pages.
May 16, 2016 "Summary of Preliminary Patentability Search and Opinion" of Kloss, Stenger & LoTempio for Skellerup, 4 pages.
Jeffry W. Smith's Jul. 7, 2016 response letter to Vincent LoTempio's Jun. 8, 2016 "Summary of the Proposed Claim Amendments," 1 page.
Vincent LoTempio's Jun. 8, 2016 "Summary of the Proposed Claim Amendments," 2 pages.
Vincent LoTempio's Nov. 9, 2016 "Evidence of Skellerup Joint Inventorship and Background," 34 pages.
Jeffry W. Smith's Nov. 30, 2016 response letter to Vincent LoTempio's Nov. 9, 2016 Letter, 1 page.
David T. Stephenson's Dec. 27, 2016 "Dispute Resolution Proposal," 2 pages.
Jeffry W. Smith's Mar. 2, 2017 response letter to David T. Stephenson's Dec. 27, 2016 letter, 1 page.
David T. Stephenson's Apr. 6, 2017 second "Dispute Resolution Proposal," 2 pages.
International Search Report and Written Opinion dated Jan. 20, 2016; PCT Application No. PCT/US2015/059483, 12 pages.
Hedlund, U.S. Appl. No. 62/077,158, filed Nov. 4, 2014, 26 pages.
Third-Party Submission Under 37 CFR 1.290 filed Oct. 31, 2017, U.S. Appl. No. 14/934,754, 20 pages.

* cited by examiner

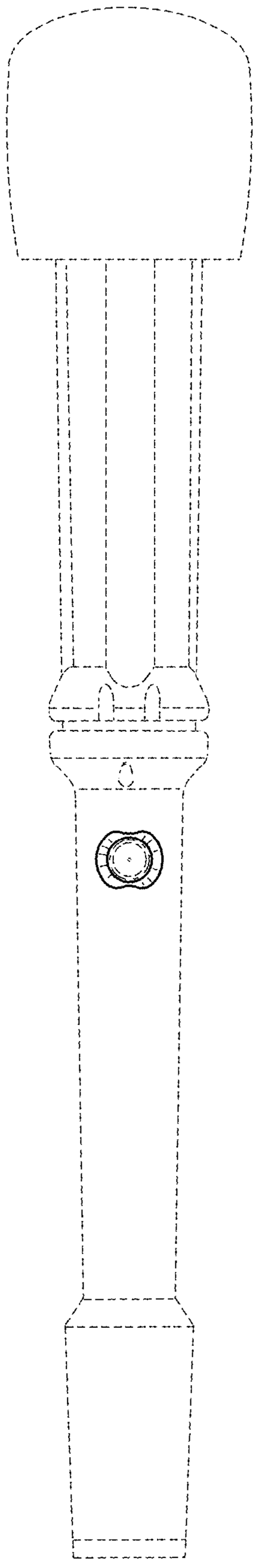

FIG. 1

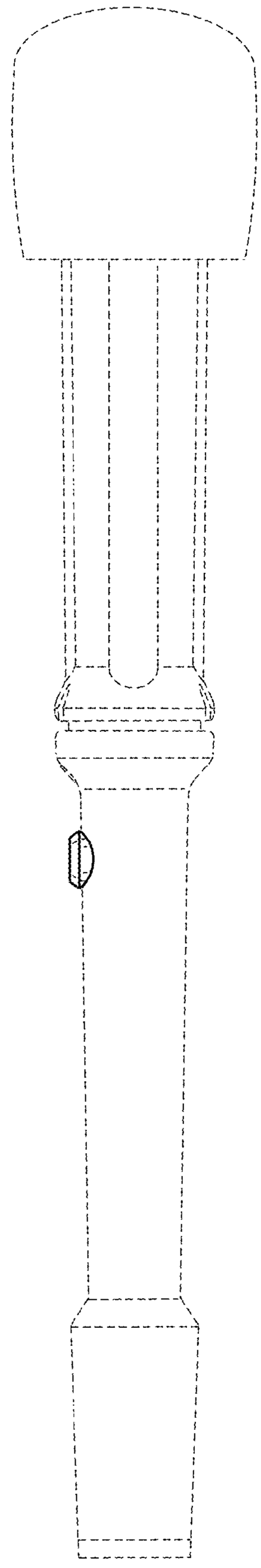

FIG. 2

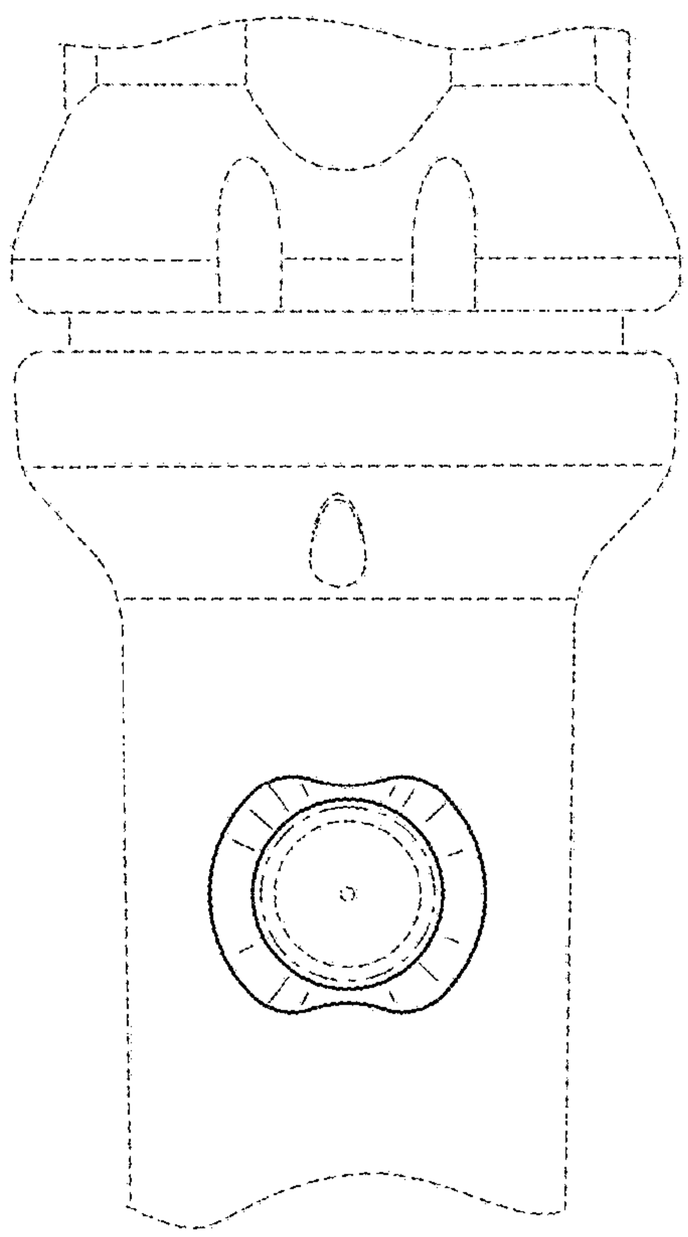

FIG. 3

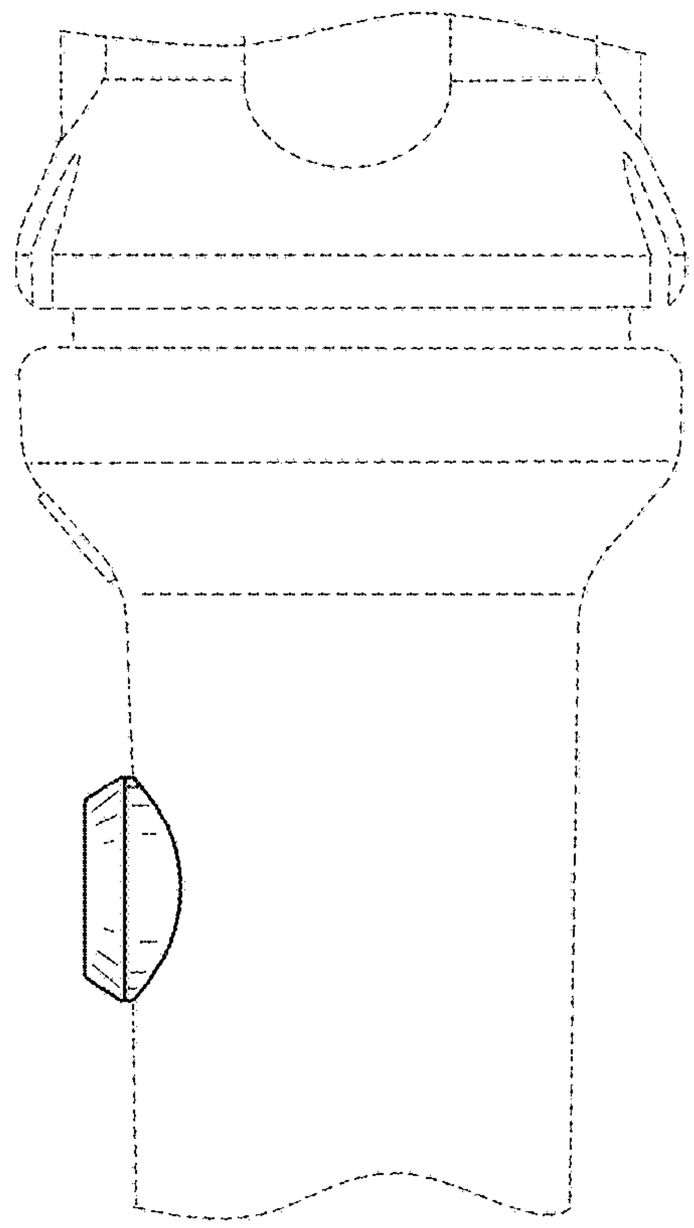

FIG. 4

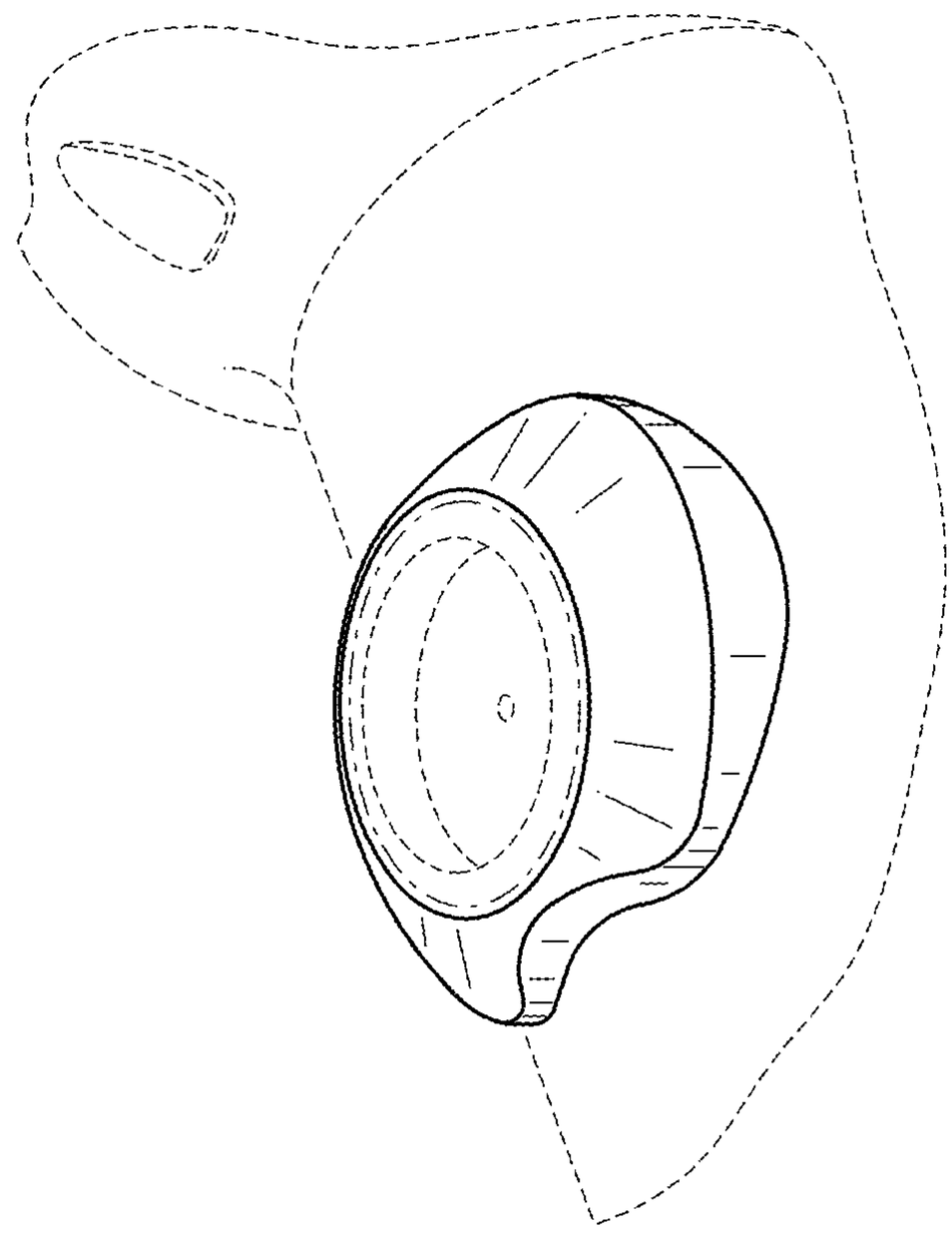

FIG. 6

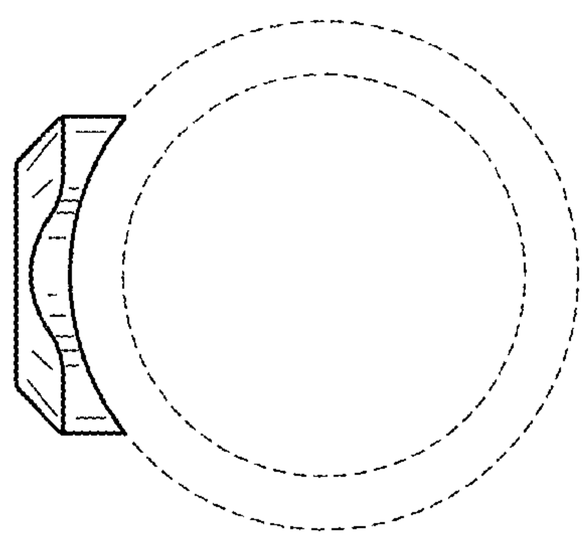

FIG. 5

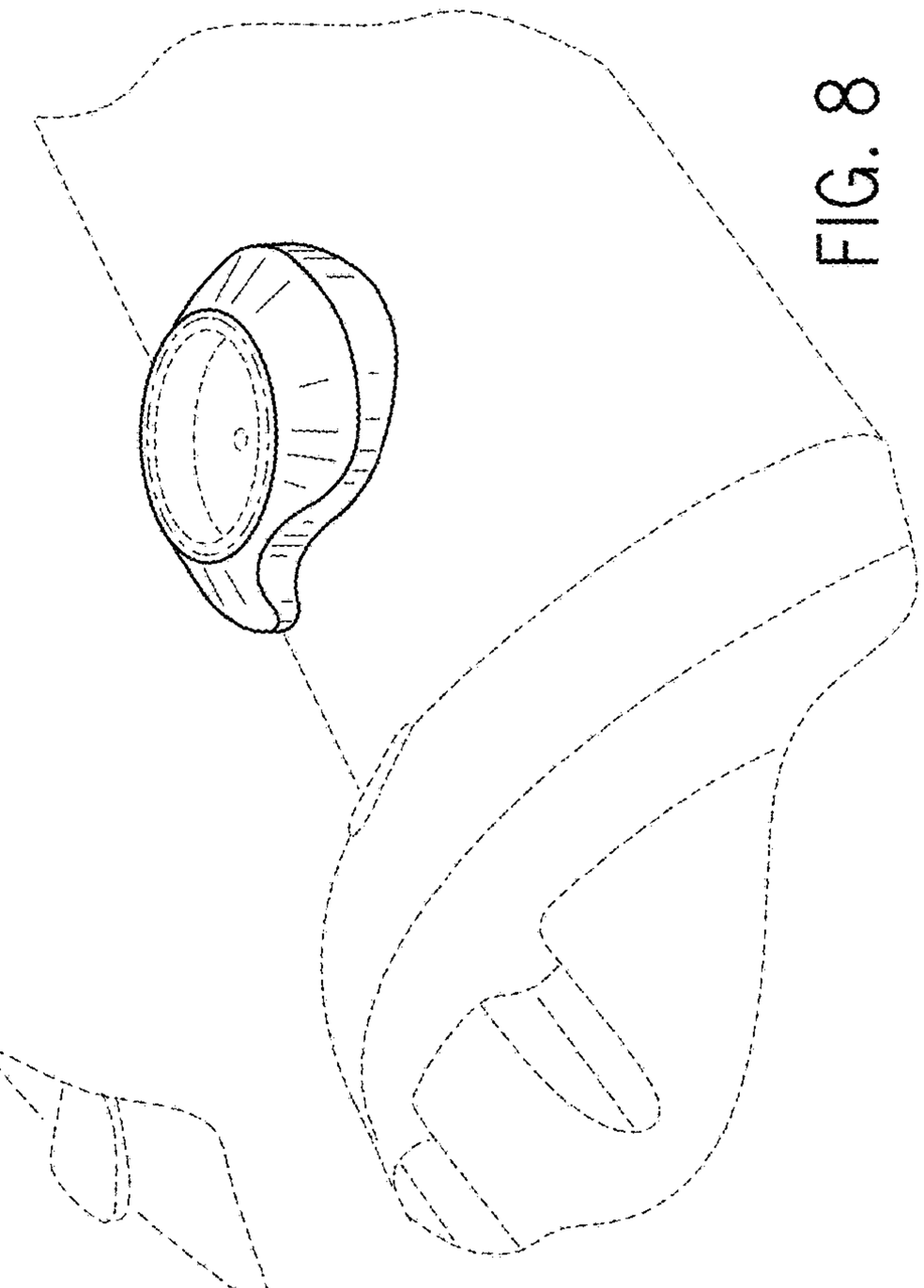

FIG. 8

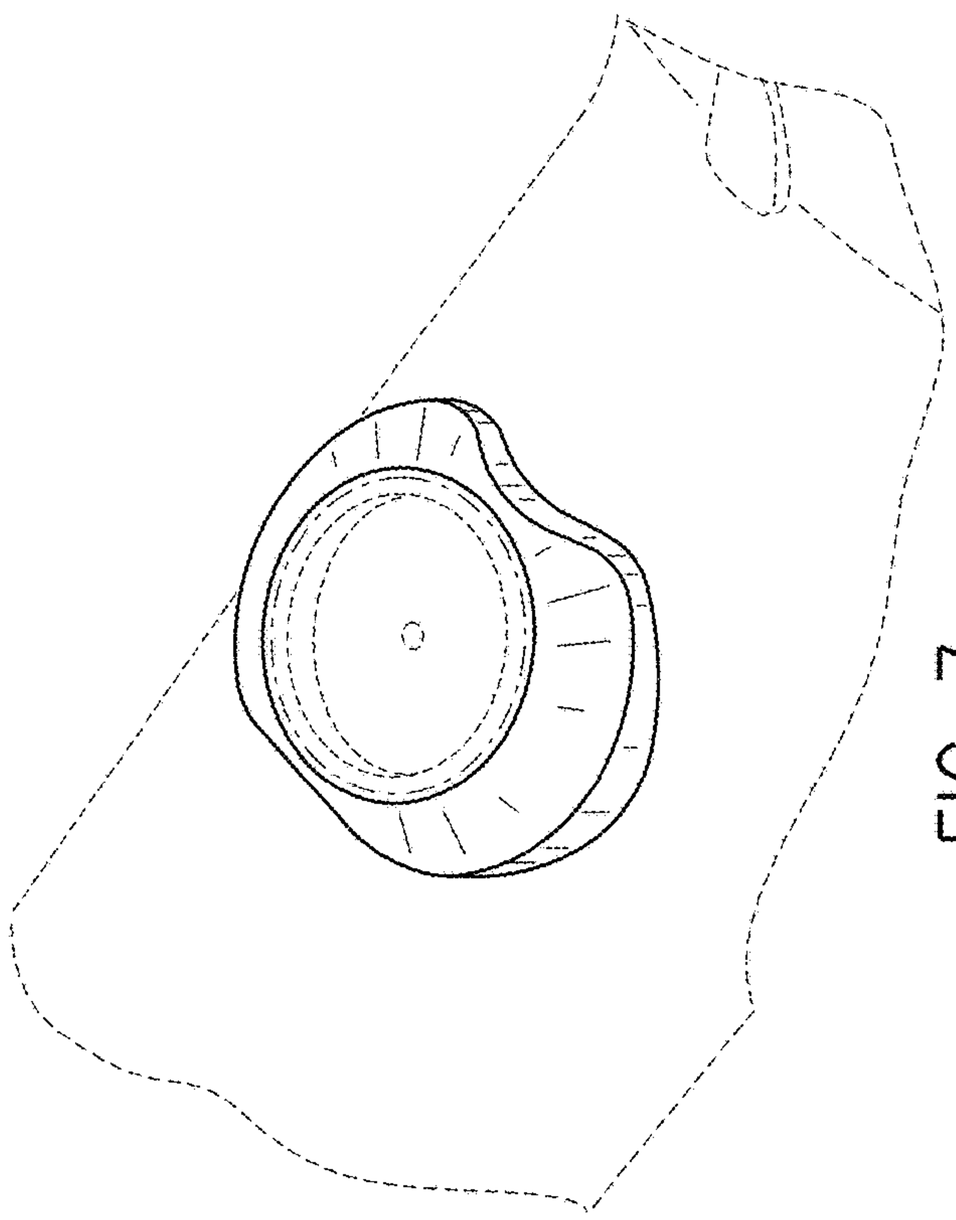

FIG. 7

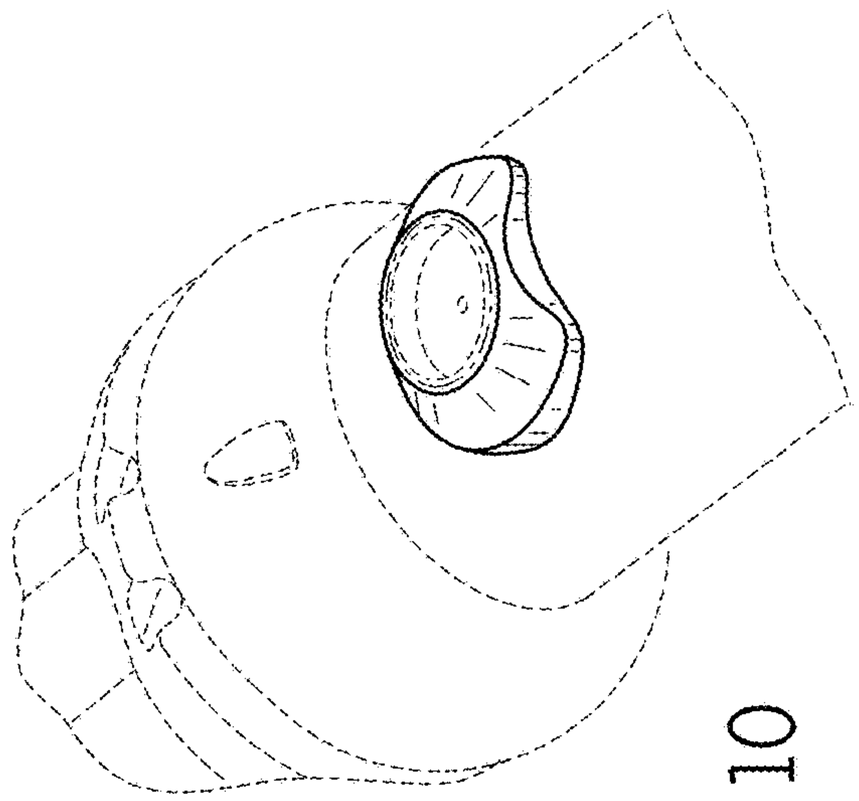

FIG. 10

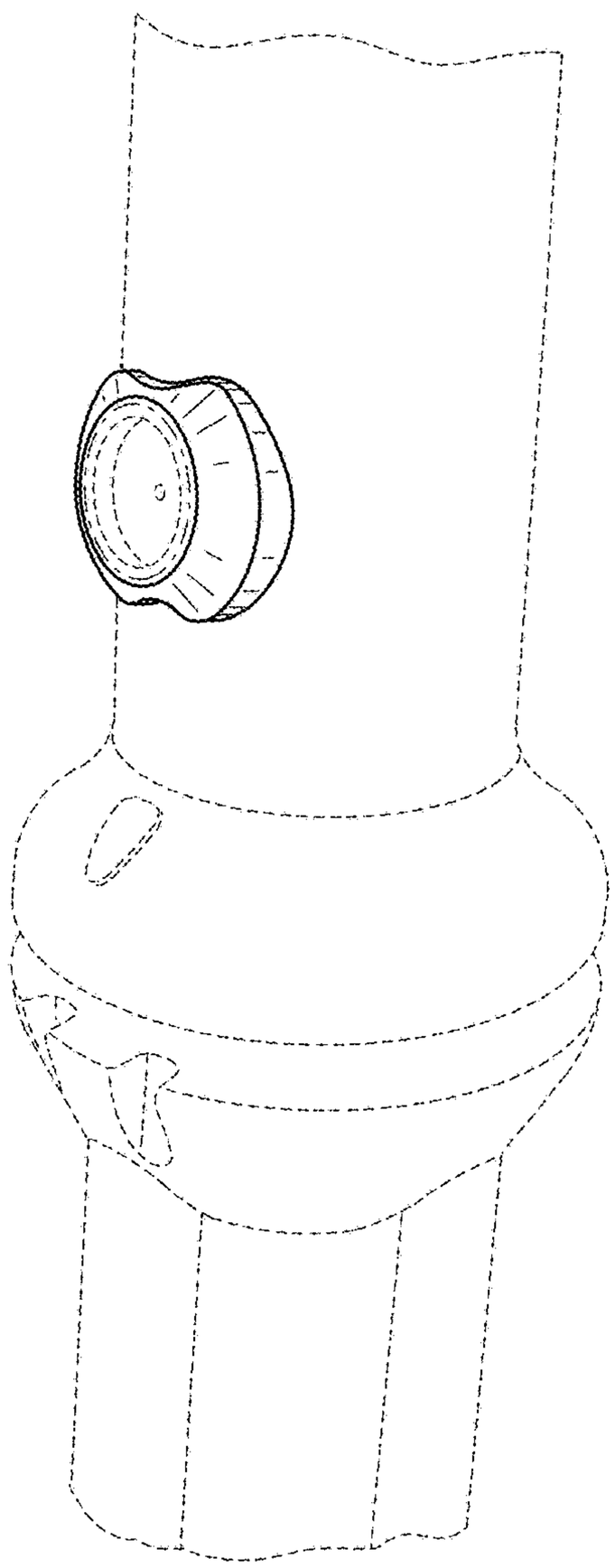

FIG. 9