US00D830074S

(12) United States Design Patent

Hagan et al.

(10) Patent No.: US D830,074 S
(45) Date of Patent: ** Oct. 9, 2018

(54) **RECONFIGURABLE ROCKING CHAIR**

(71) Applicants: **William R. Hagan**, Winchester, VA (US); **Shane M. Deverill**, Peachtree City, GA (US)

(72) Inventors: **William R. Hagan**, Winchester, VA (US); **Shane M. Deverill**, Peachtree City, GA (US)

(73) Assignee: **Cobblestone Colonels, LLC**, Winchester, VA (US)

(**) Term: **15 Years**

(21) Appl. No.: **29/570,948**

(22) Filed: **Jul. 13, 2016**

Related U.S. Application Data

(63) Continuation of application No. 14/820,812, filed on Aug. 7, 2015, now abandoned.

(51) **LOC (11) Cl.** **06-01**

(52) **U.S. Cl.**
USPC **D6/348**

(58) **Field of Classification Search**
USPC D6/334–336, 344, 348, 370, 376, 380, D6/716, 716.1, 716.2, 716.3, 716.4; D21/412

(Continued)

(56) **References Cited**

U.S. PATENT DOCUMENTS

205,070 A * 6/1878 Fernquist A47C 3/029 297/271.2
221,062 A * 10/1879 Hayes A47C 3/029 297/32

(Continued)

FOREIGN PATENT DOCUMENTS

CN 103222746 A 7/2013

OTHER PUBLICATIONS

International Search Report and the Written Opinion for International Application No. PCT/US2016/045839 dated Oct. 26, 2016; 13 pgs.

(Continued)

Primary Examiner — Mimosa De
(74) *Attorney, Agent, or Firm* — Merchant & Gould P.C.

(57) **CLAIM**

The ornamental design for a reconfigurable rocking chair, as shown and described.

DESCRIPTION

FIG. **1** is a perspective view of a reconfigurable rocking chair showing my new design, the reconfigurable rocking chair being shown in a first configuration.
FIG. **2** is a left side elevation view of the reconfigurable rocking chair shown in FIG. **1**;
FIG. **3** is a right side elevation view of the reconfigurable rocking chair shown in FIG. **1**;
FIG. **4** is a front elevation view of the reconfigurable rocking chair shown in FIG. **1**;
FIG. **5** is a back elevation view of the reconfigurable rocking chair shown in FIG. **1**;
FIG. **6** is a top plan view of the reconfigurable rocking chair shown in FIG. **1**;
FIG. **7** is a bottom plan view of the reconfigurable rocking chair shown in FIG. **1**;
FIG. **8** is a perspective view of a reconfigurable rocking chair showing my new design, the reconfigurable rocking chair being shown in a second configuration.
FIG. **9** is a left side elevation view of the reconfigurable rocking chair shown in FIG. **8**;
FIG. **10** is a right side elevation view of the reconfigurable rocking chair shown in FIG. **8**;
FIG. **11** is a front elevation view of the reconfigurable rocking chair shown in FIG. **8**;
FIG. **12** is a back elevation view of the reconfigurable rocking chair shown in FIG. **8**;
FIG. **13** is a top plan view of the reconfigurable rocking chair shown in FIG. **8**; and,
FIG. **14** is a bottom plan view of the reconfigurable rocking chair shown in FIG. **8**.

1 Claim, 12 Drawing Sheets

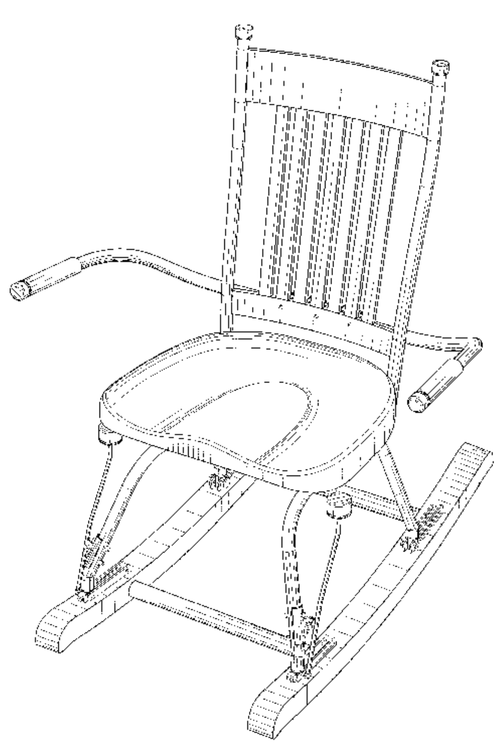

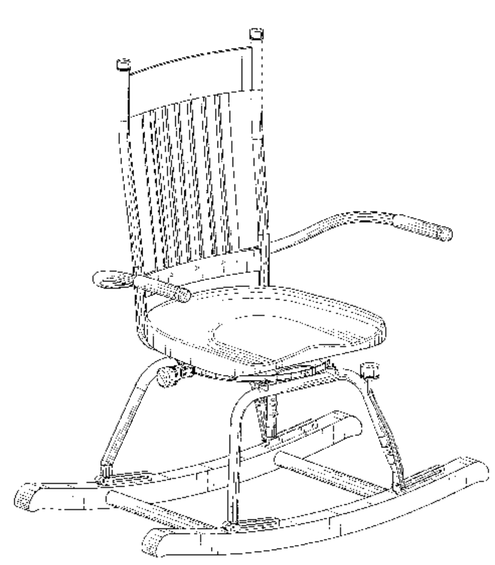

(58) **Field of Classification Search**
CPC .. A47C 3/02; A47C 3/029; A47C 5/04; A47C 7/16; A47D 13/10; A47D 13/102
See application file for complete search history.

(56) **References Cited**

U.S. PATENT DOCUMENTS

240,793	A	*	4/1881	Wakefield	A47C 3/029 297/32
251,034	A	*	12/1881	Franz	A47C 3/029 297/271.2
255,104	A	*	3/1882	Dryfoos et al.	A47C 3/029 297/133
678,376	A		7/1901	Carlson	
3,910,633	A		10/1975	Marsh et al.	
6,024,409	A		2/2000	Collins	
D578,314	S	*	10/2008	Kalaouze	D6/348
7,537,285	B2	*	5/2009	Stewart	A47C 3/029 297/130
7,597,397	B2		10/2009	McCoy et al.	
D734,970	S	*	7/2015	Mulholland	D6/370
D816,357	S	*	5/2018	Hagan	D6/348

OTHER PUBLICATIONS

Copending U.S. Appl. No. 14/820,812, filed Aug. 7, 2015 by William R. Hagan, et al., entitled "Reconfigurable Rocking Chair".

* cited by examiner

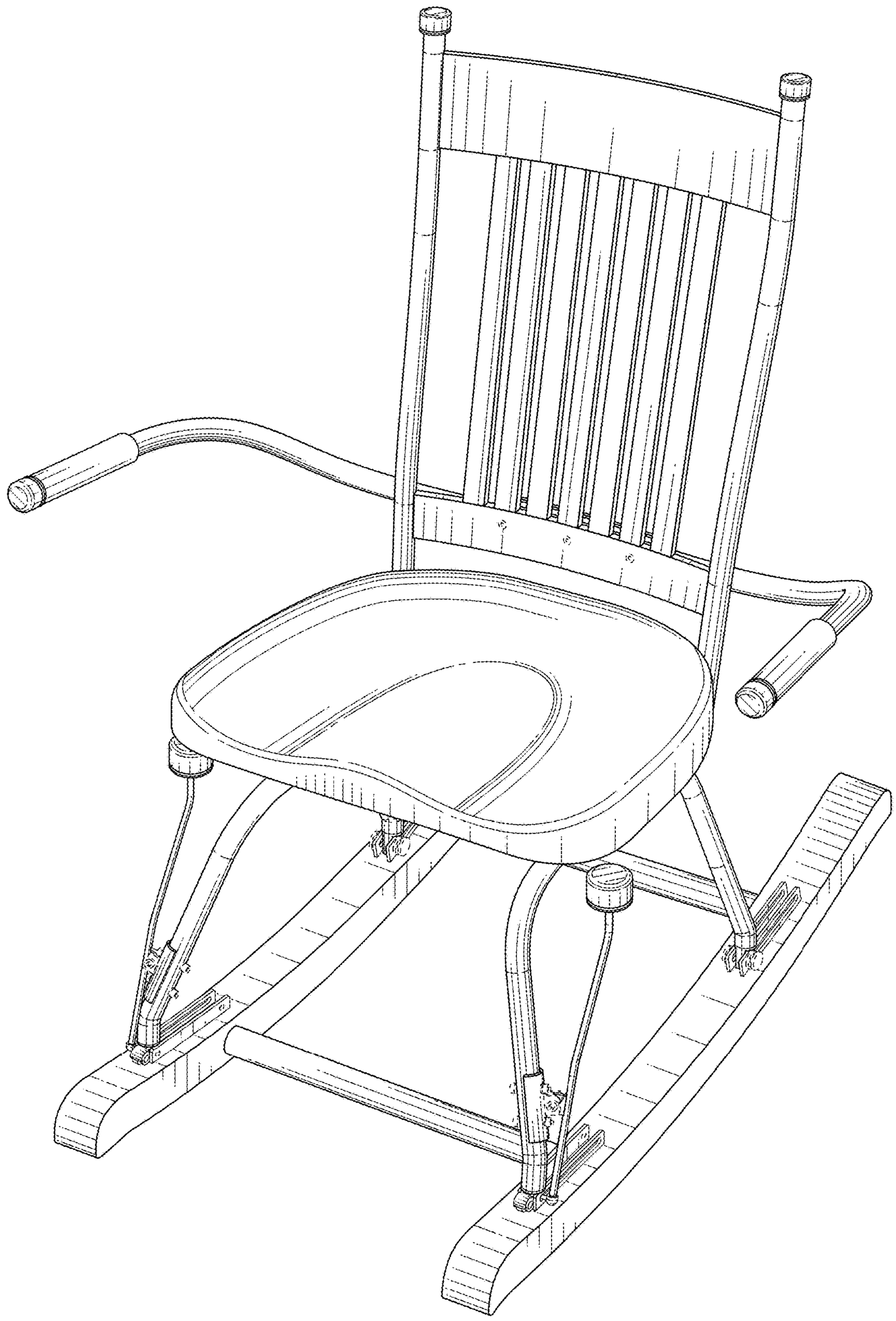

FIG. 1

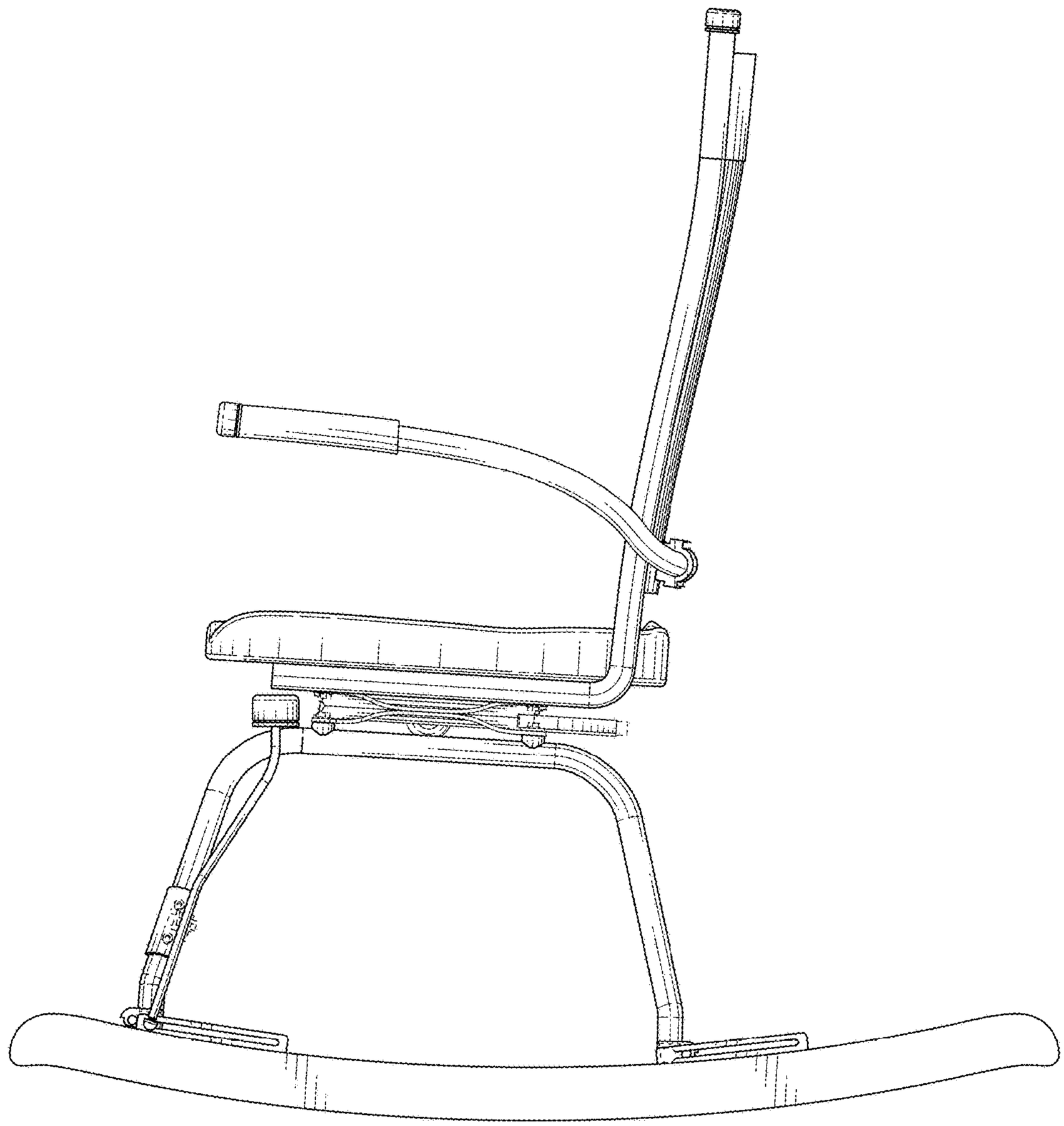

FIG. 2

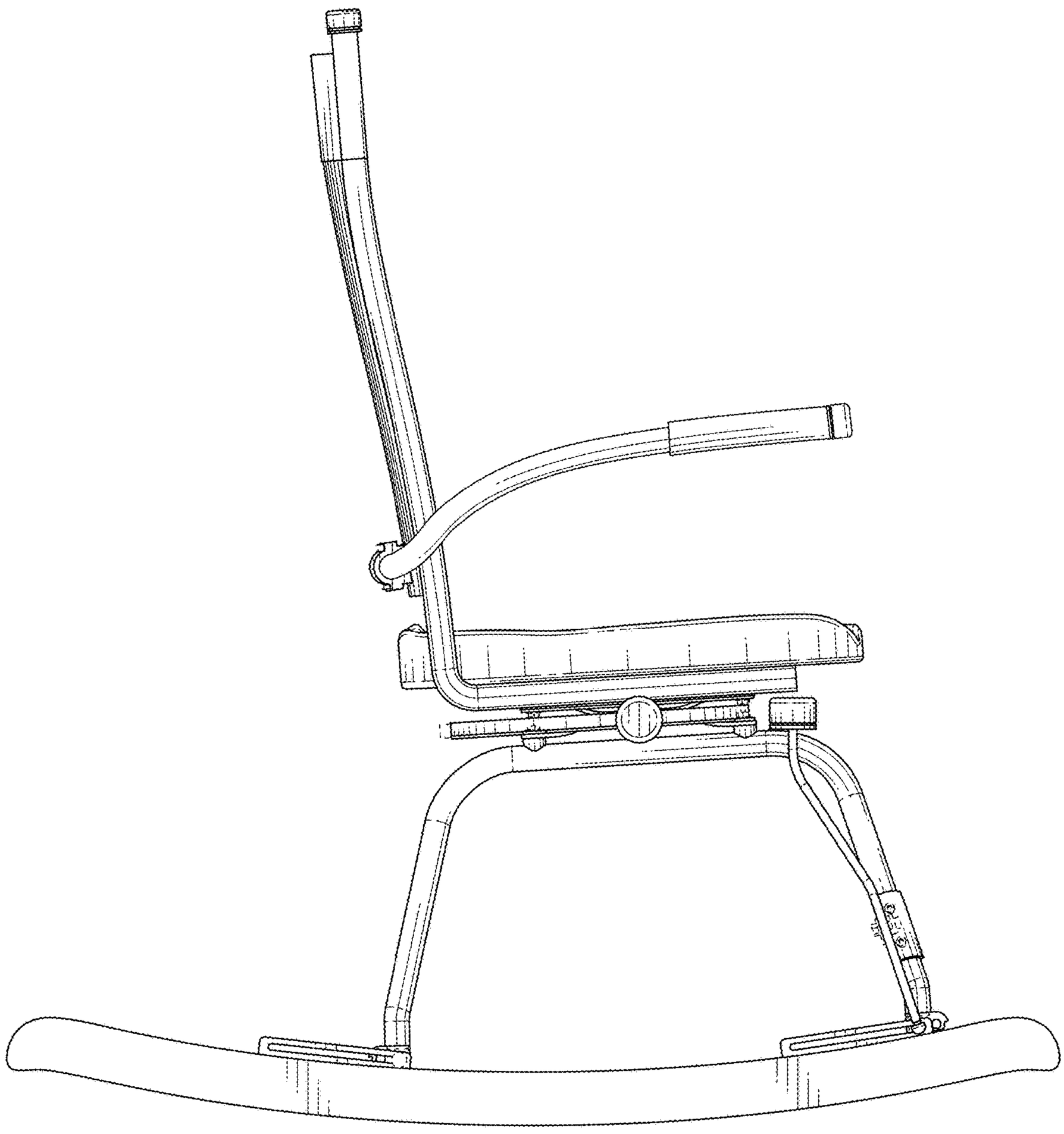

FIG. 3

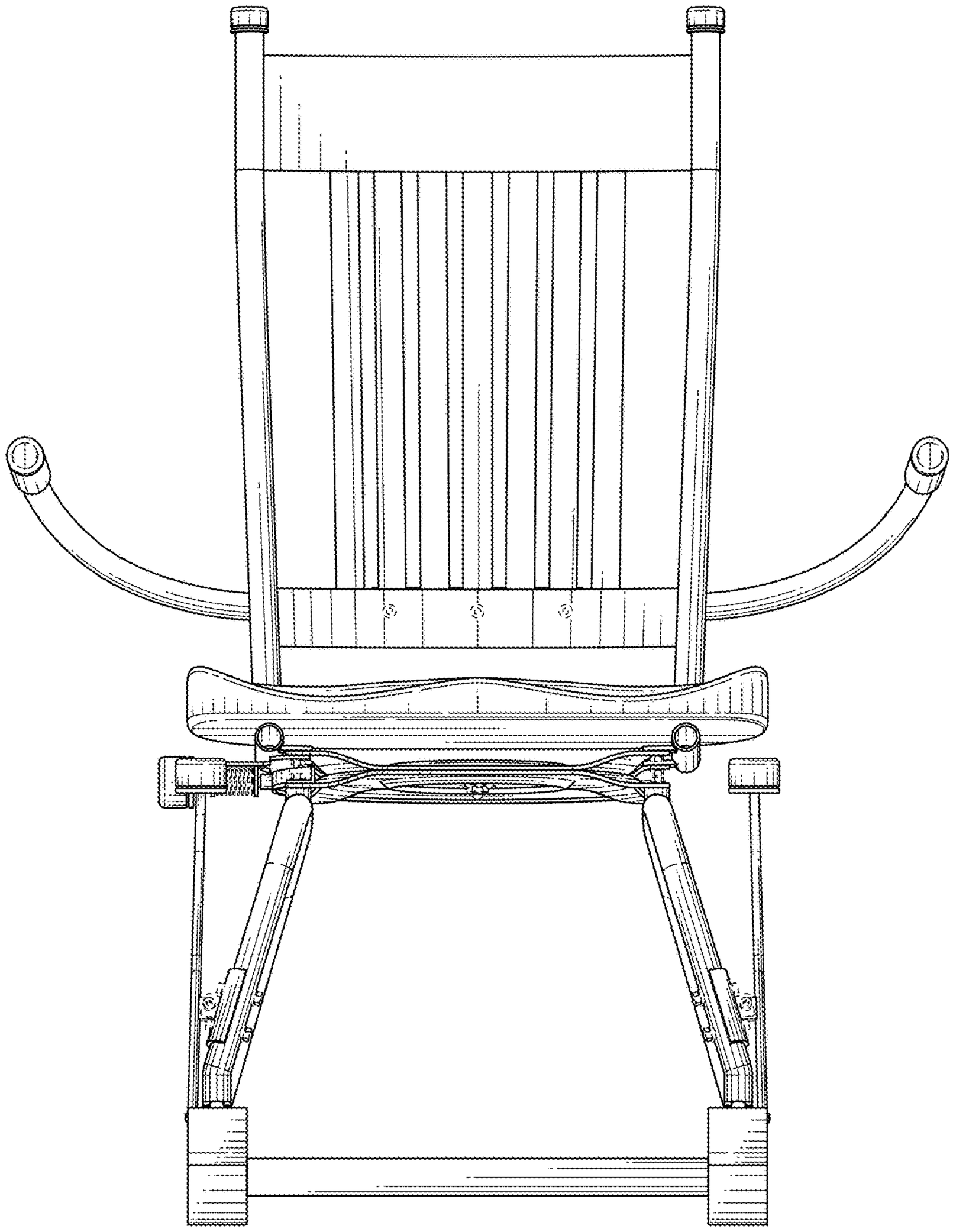

FIG. 4

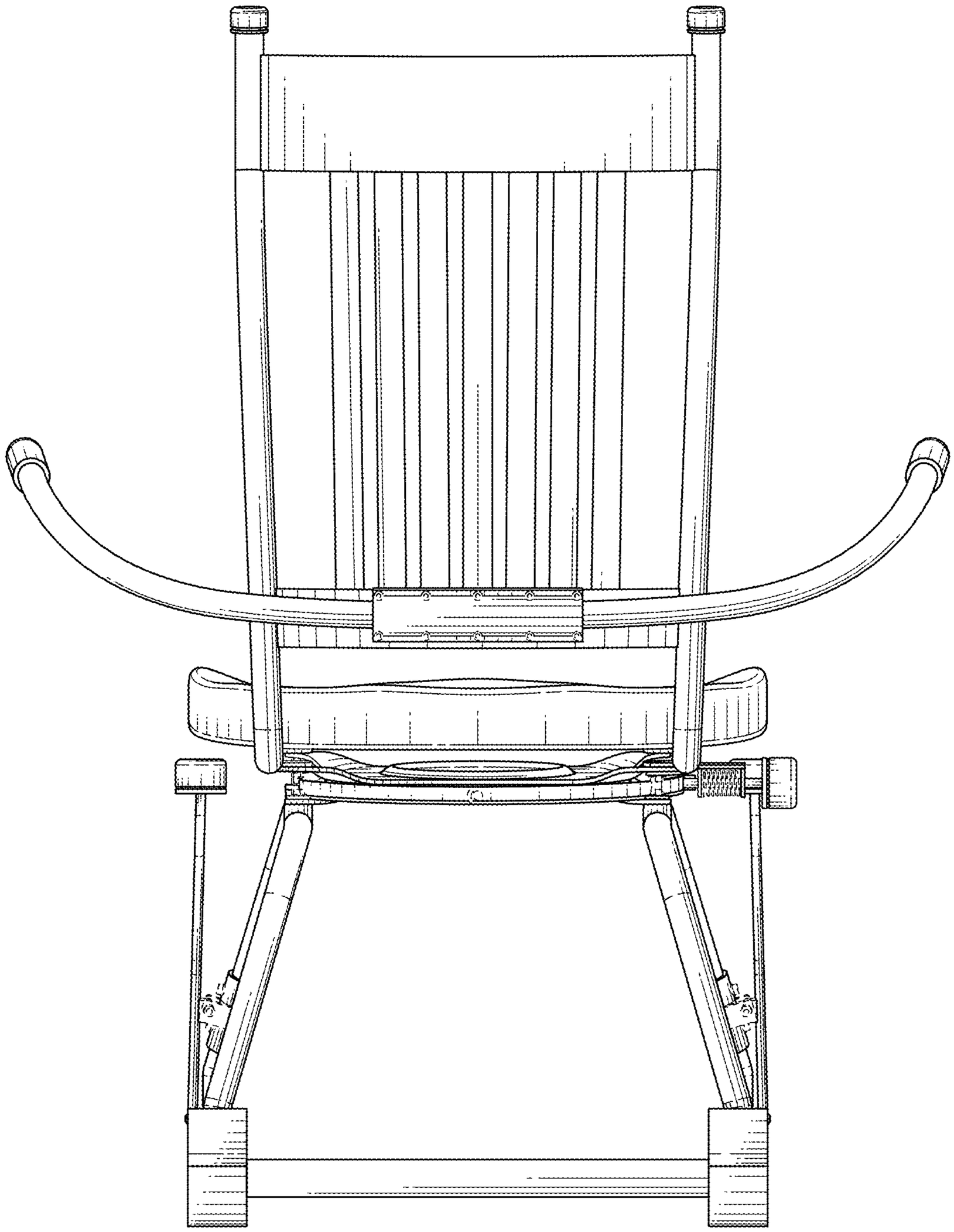

FIG. 5

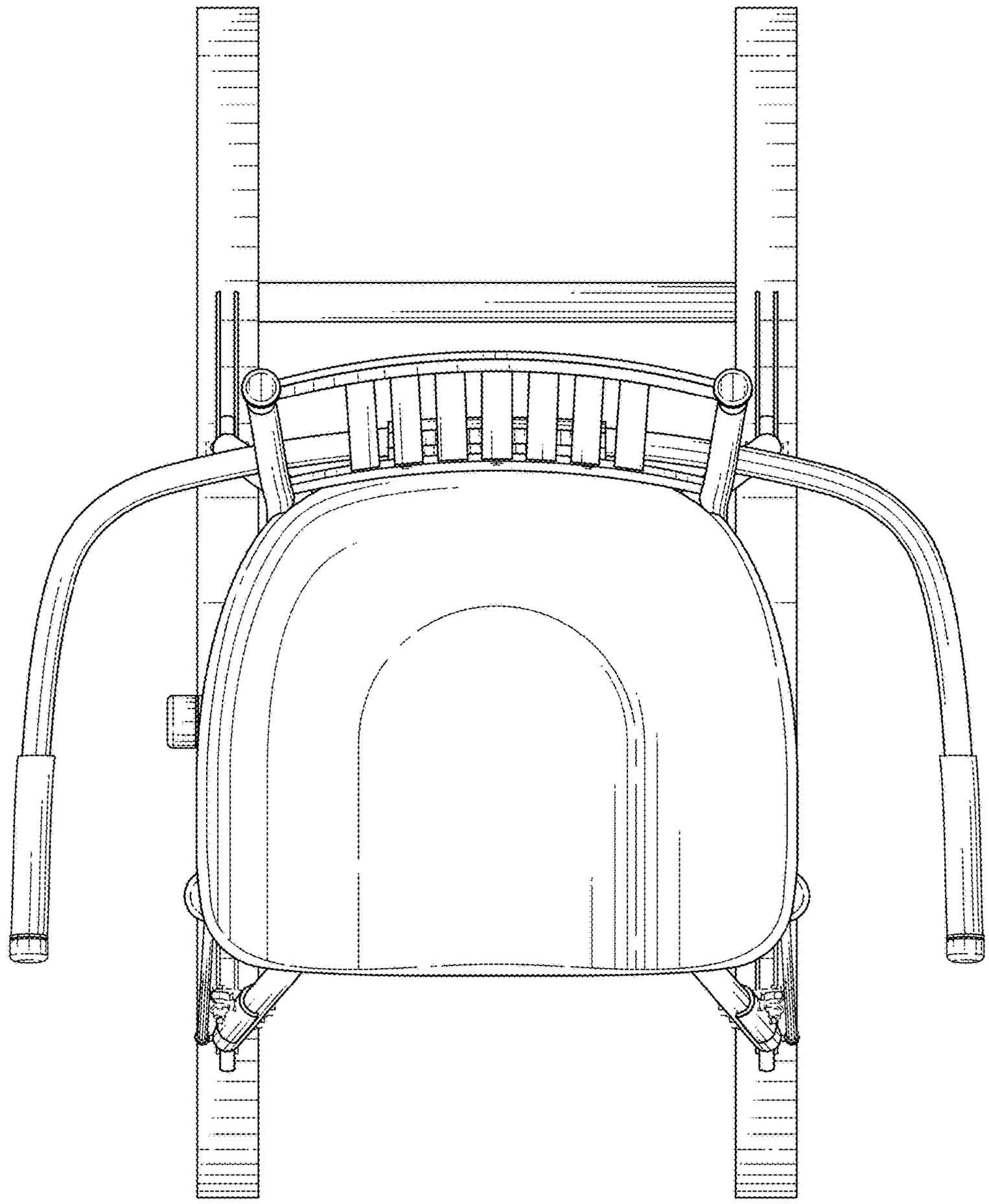

FIG. 6

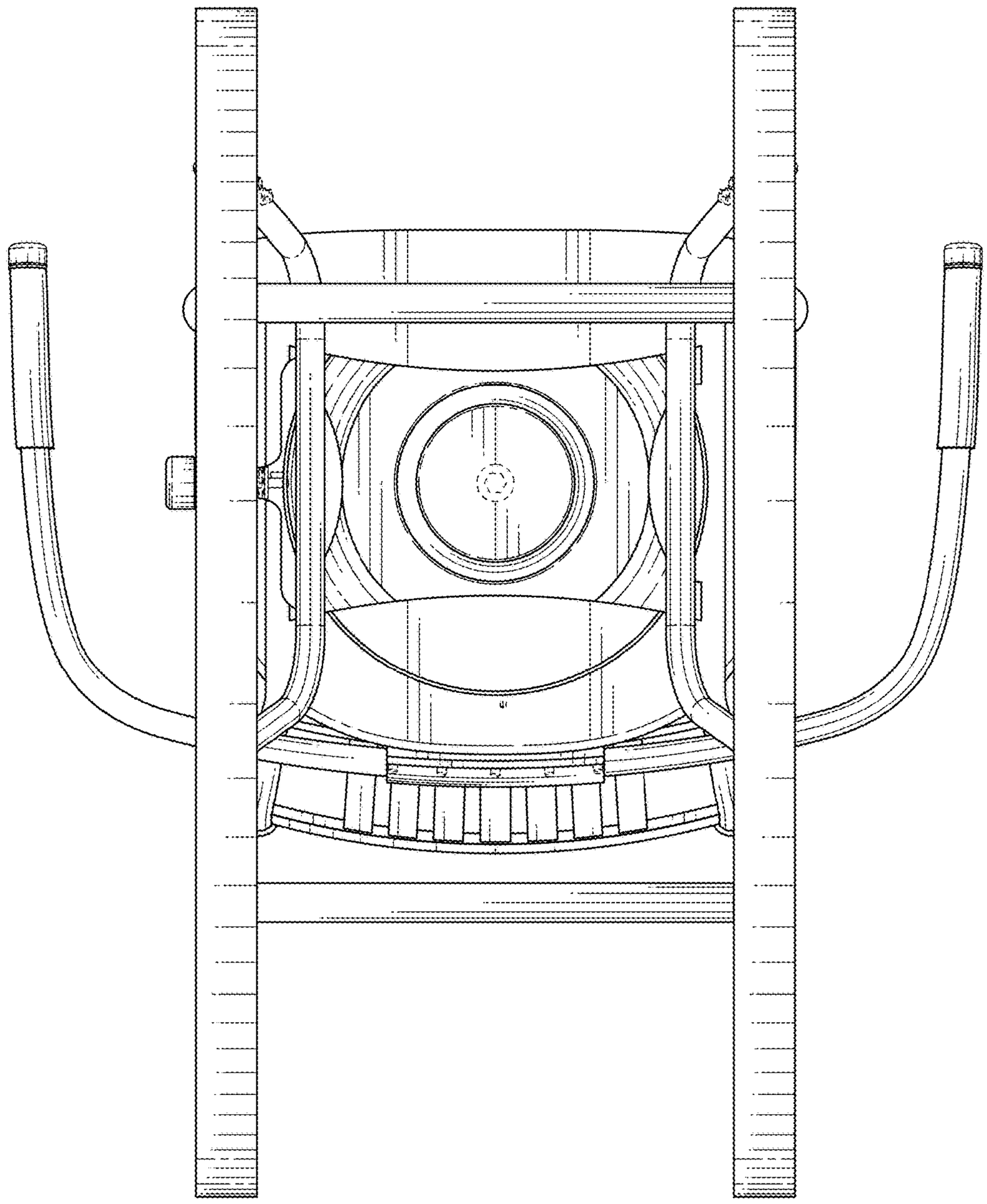

FIG. 7

FIG. 8

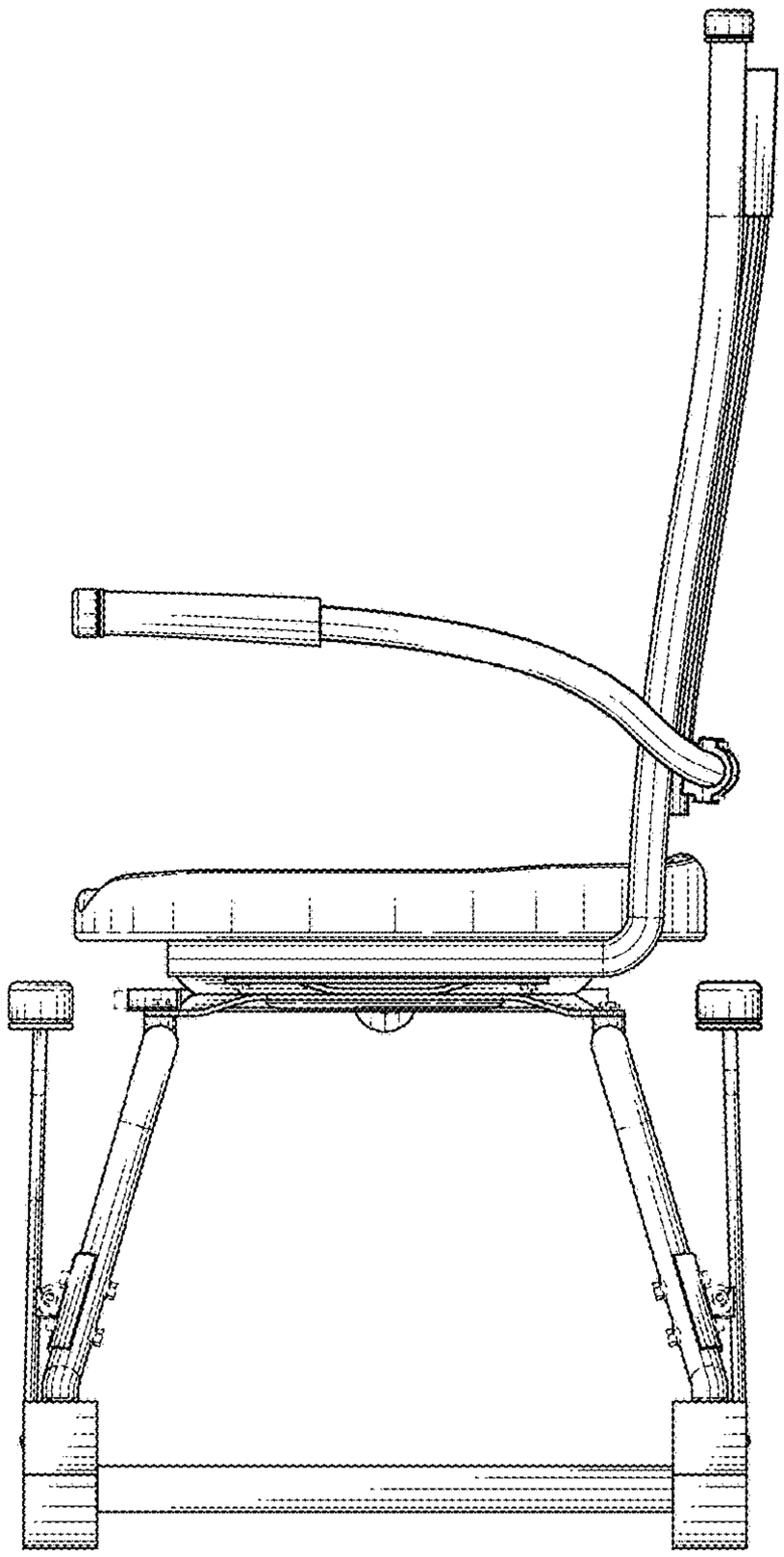

FIG. 9

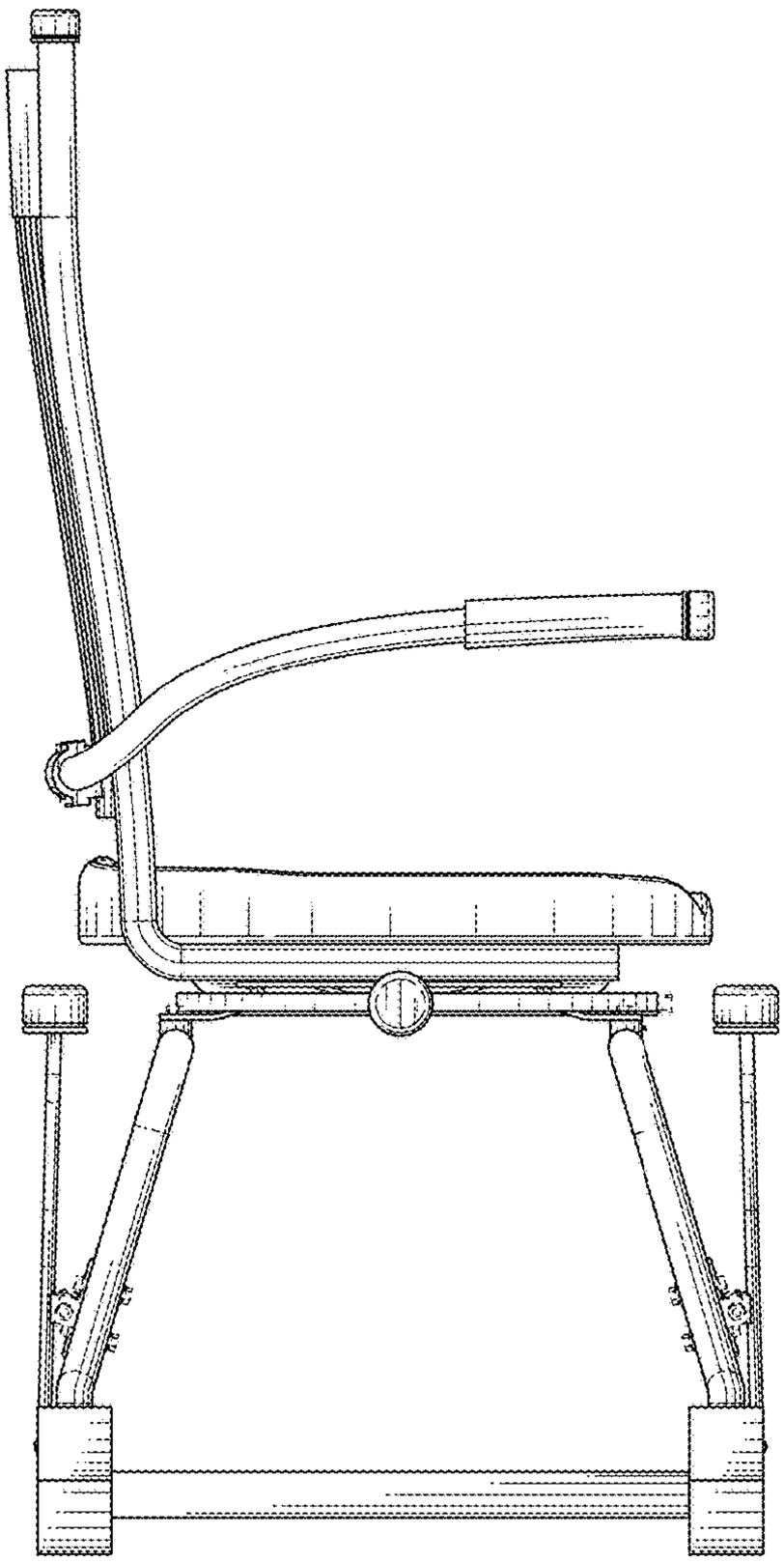

FIG. 10

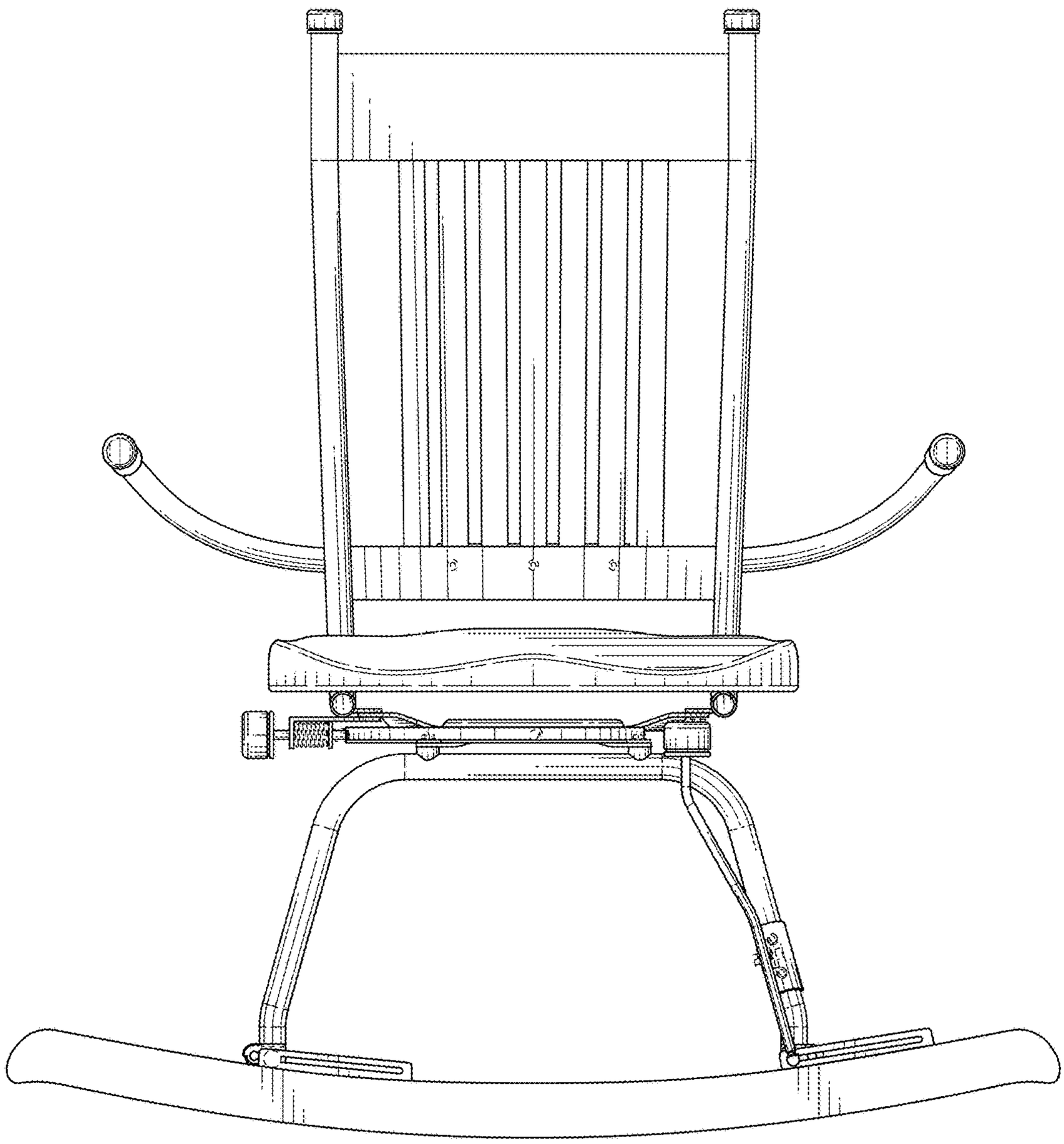

FIG. 11

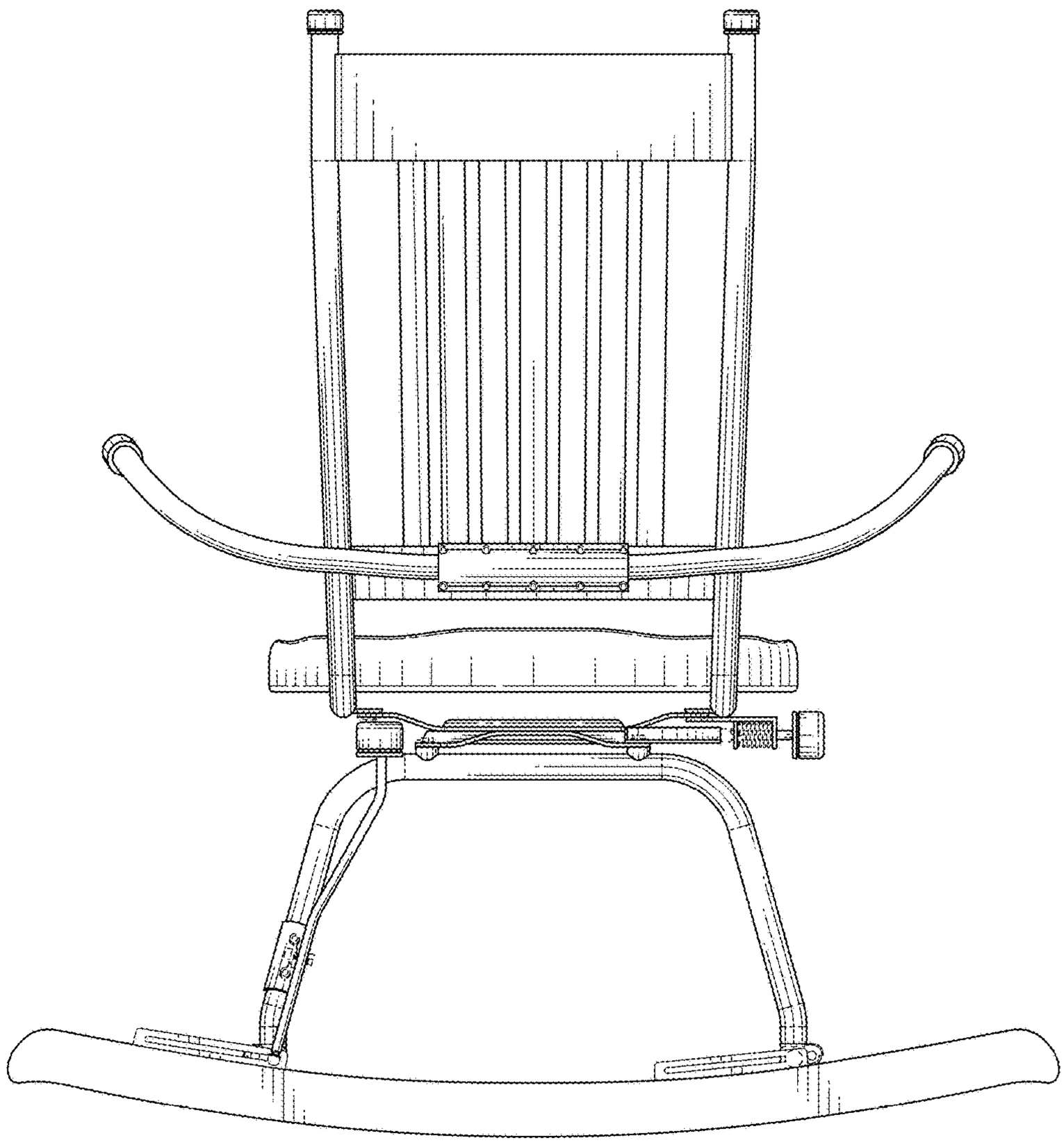

FIG. 12

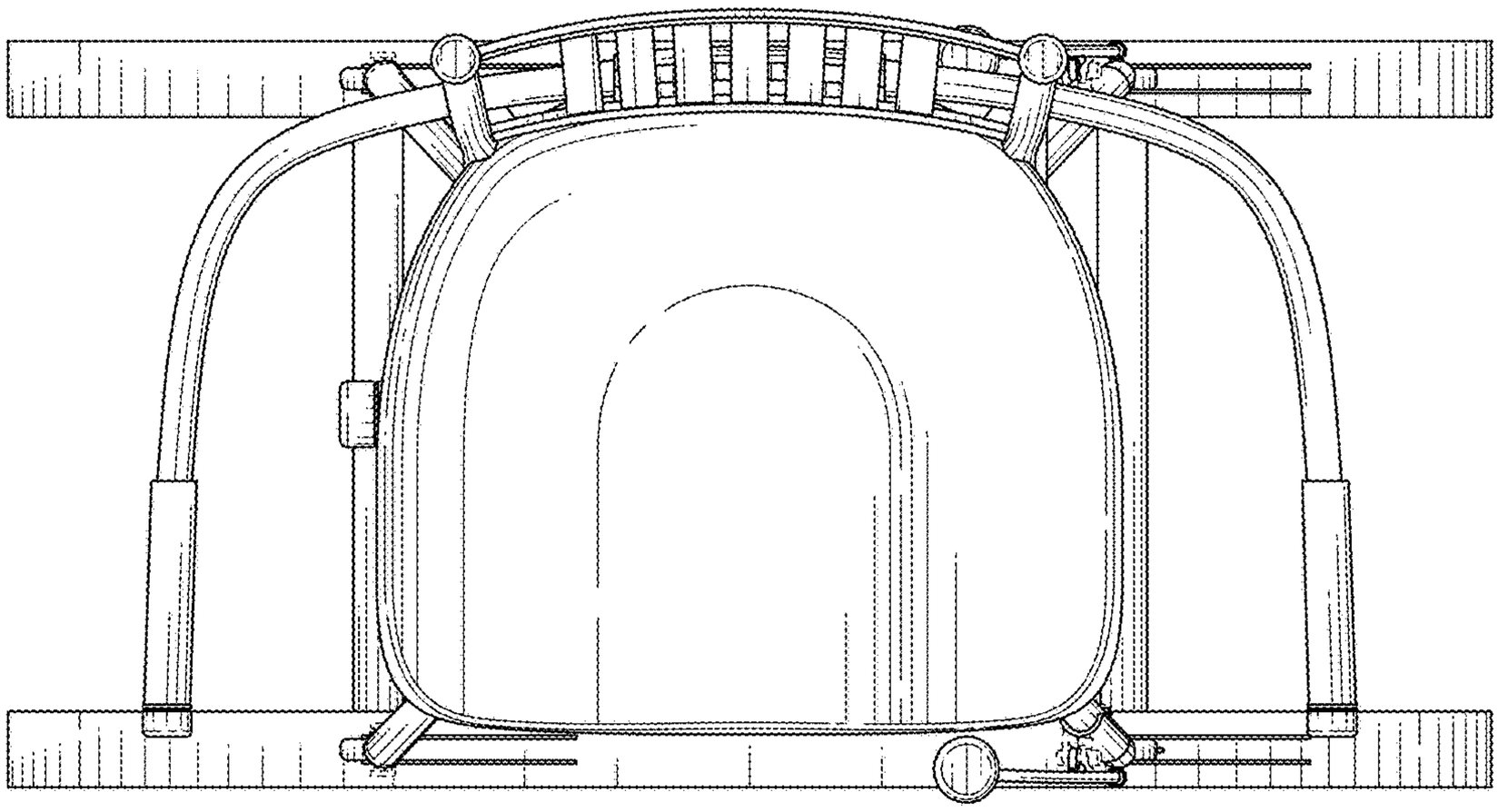

FIG. 13

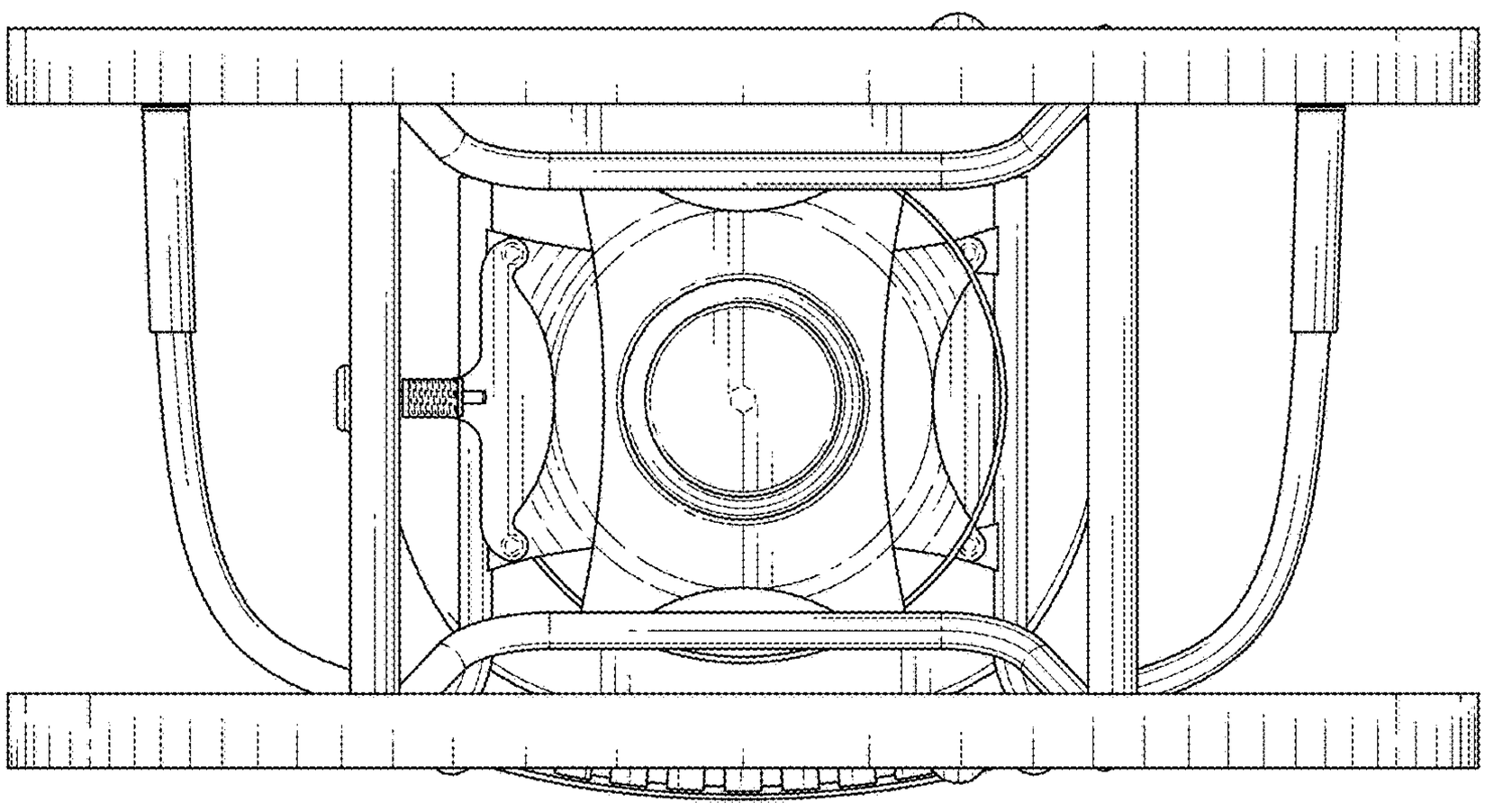

FIG. 14