US00D830052S

(12) United States Design Patent

Meredith, Sr.

(10) Patent No.: US D830,052 S
(45) Date of Patent: ** Oct. 9, 2018

(54) **BELT CLIP**

(71) Applicant: **Kandment, LLC**, Portsmouth, VA (US)

(72) Inventor: **Melvin A. Meredith, Sr.**, Portsmouth, VA (US)

(**) Term: **15 Years**

(21) Appl. No.: **29/606,049**

(22) Filed: **Jun. 1, 2017**

(51) **LOC (11) Cl.** **03-01**

(52) **U.S. Cl.**
USPC **D3/215**

(58) **Field of Classification Search**
USPC D3/215, 218, 221, 229; 24/580.11, 663, 24/667, 669, 682.1; 224/148.4, 191, 197, 224/240, 242, 245, 268, 271–272, 667, 224/669, 673, 904
CPC A45F 5/00; A45F 5/02; A45F 5/021; A45F 5/06; A61M 5/14244; F16B 45/00
See application file for complete search history.

(56) **References Cited**

U.S. PATENT DOCUMENTS

381,833	A	*	4/1888	Fried	24/669
D382,105	S	*	8/1997	Bonaldi	D11/201
6,131,779	A	*	10/2000	Gendala	A45F 5/02 224/148.1
D433,563	S	*	11/2000	Capanna	D3/215
D478,630	S	*	8/2003	Riggins	D19/78
D555,896	S	*	11/2007	Ward-Llewellyn	D3/215
D633,739	S	*	3/2011	Hamdia	D3/215
D670,903	S	*	11/2012	Ormsbee	D3/215
9,289,052	B2	*	3/2016	Griffith	A45F 5/06
D807,634	S	*	1/2018	Eremita	D3/215

* cited by examiner

Primary Examiner — Catherine R Oliver-Garcia
(74) *Attorney, Agent, or Firm* — Pierce McCoy, PLLC; Bryce D. Miracle

(57) **CLAIM**

The ornamental design for a belt clip, substantially as shown and described.

DESCRIPTION

FIG. **1** is a rear perspective view of a first embodiment of the belt clip showing the new design;
FIG. **2** is a bottom plan view thereof;
FIG. **3** is a top plan view thereof;
FIG. **4** is a left side elevation view thereof;
FIG. **5** is a right side elevation view thereof;
FIG. **6** is a rear elevation view thereof;
FIG. **7** is a front elevation view thereof;
FIG. **8** is a rear top, rear perspective view thereof;
FIG. **9** is a cross sectional view of the belt clip shown along the line **9-9** of FIG. **8**;
FIG. **10** is a rear perspective view of a second embodiment of the belt clip showing the new design;
FIG. **11** is a bottom plan view thereof;
FIG. **12** is a top plan view thereof;
FIG. **13** is a right side elevation view thereof;
FIG. **14** is a left side elevation view thereof;
FIG. **15** is a rear elevation view thereof;
FIG. **16** is a front elevation view thereof;
FIG. **17** is a top, rear perspective view thereof; and,
FIG. **18** is a cross sectional view of the belt clip shown along line **18-18** of FIG. **17**.

1 Claim, 18 Drawing Sheets

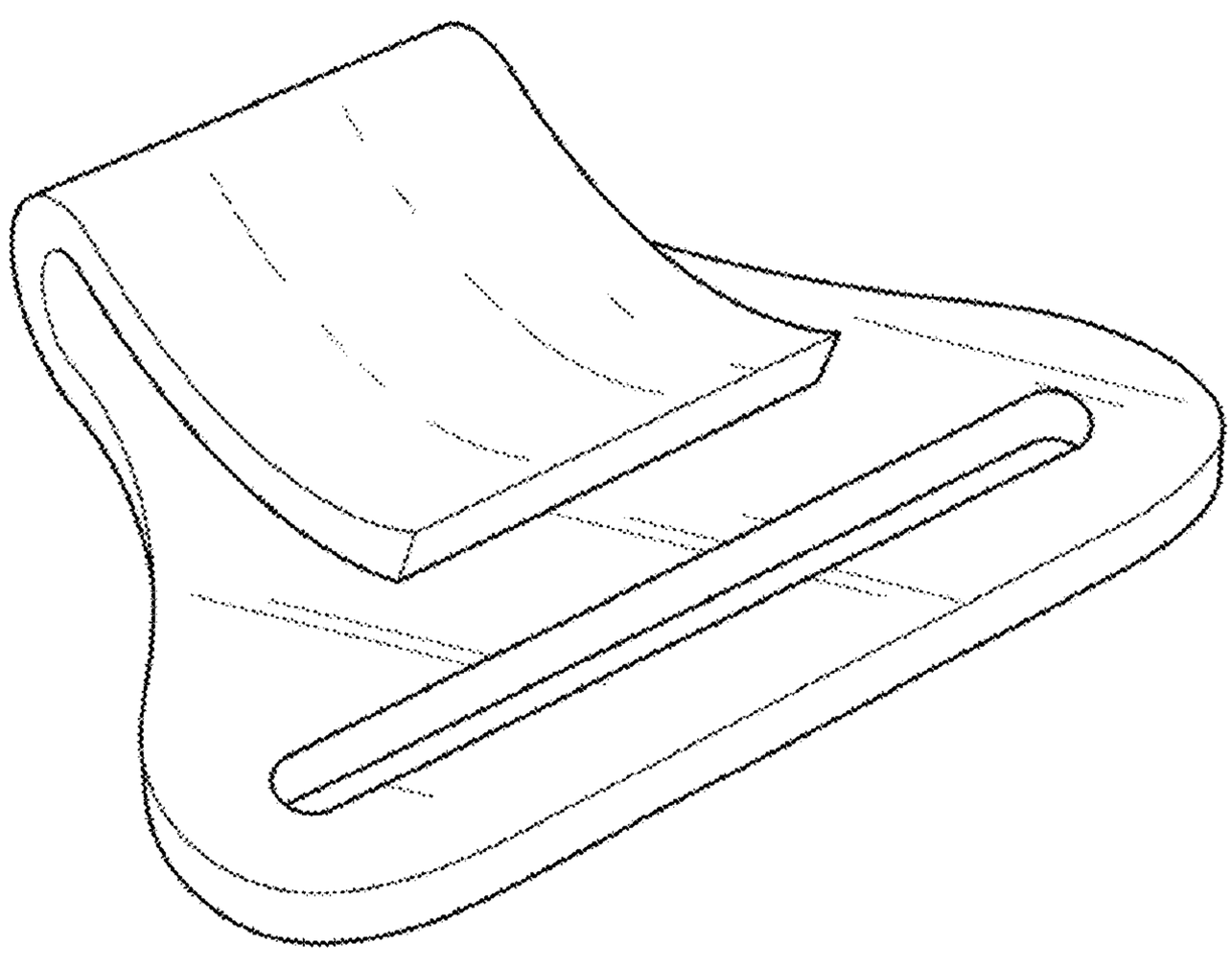

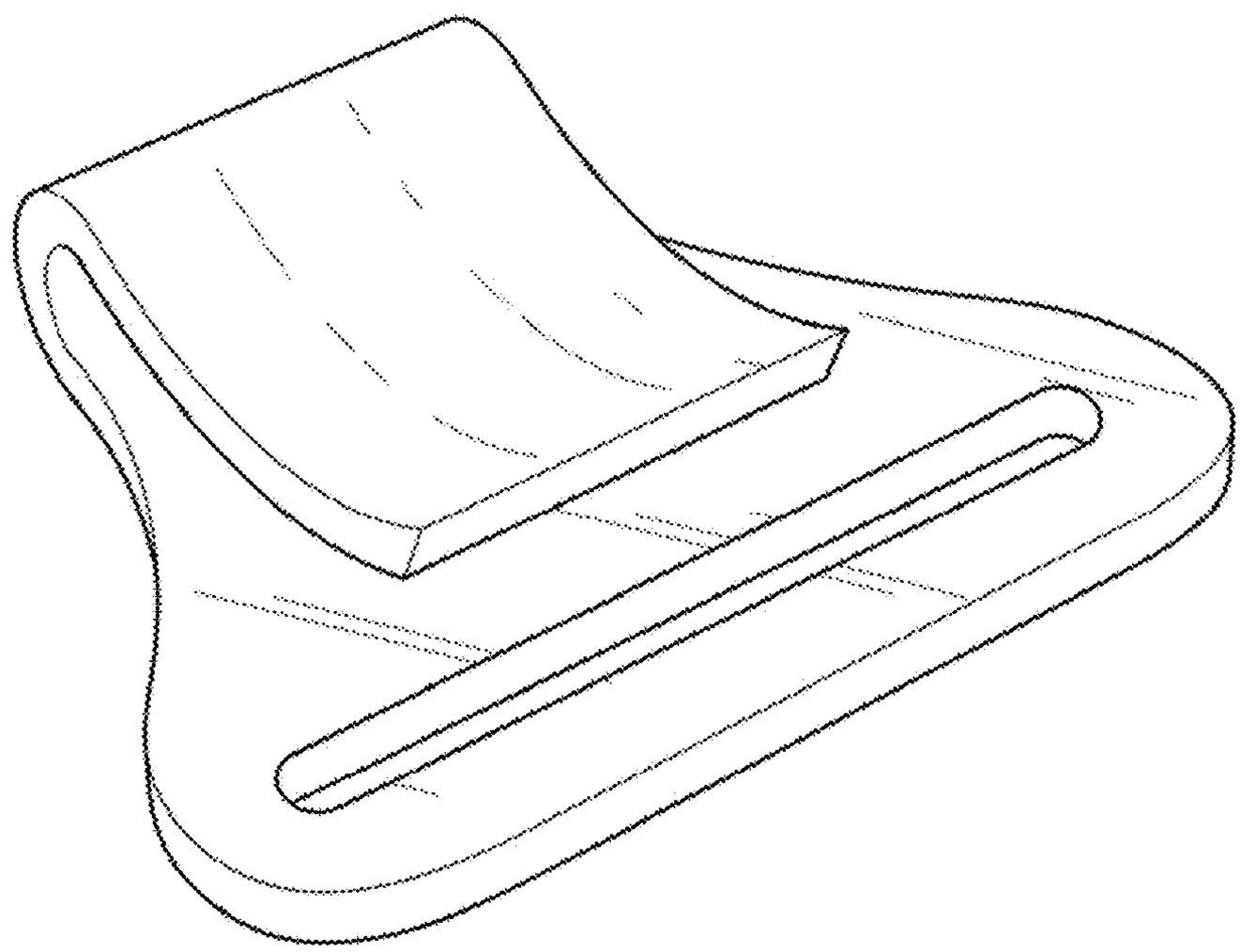

FIG. 1

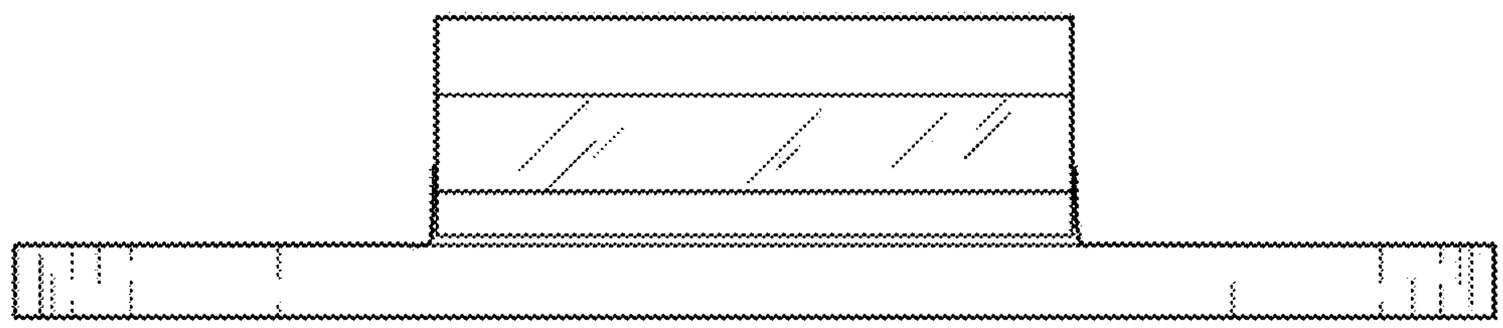

FIG. 2

FIG. 3

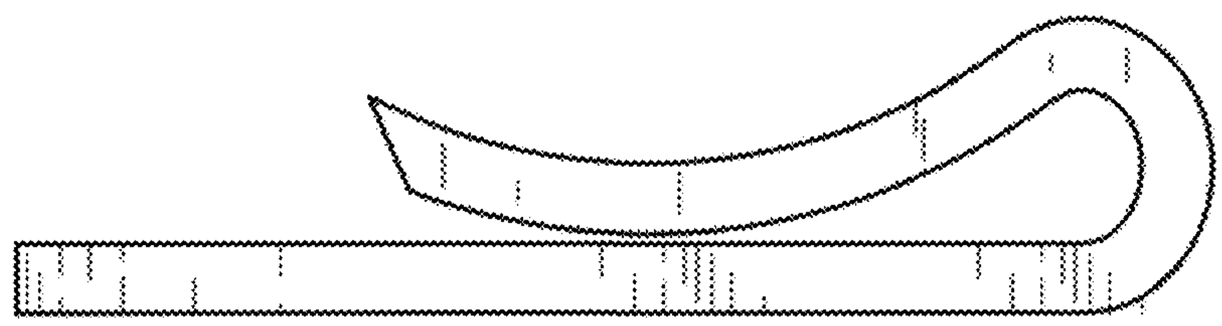

FIG. 4

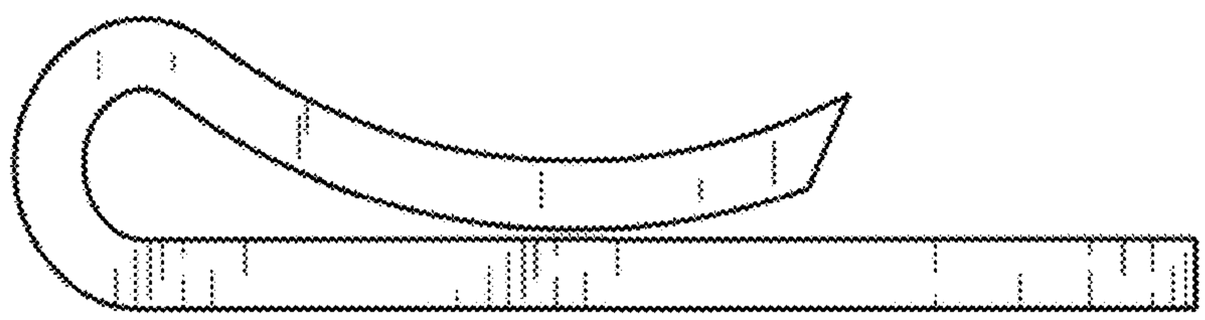

FIG. 5

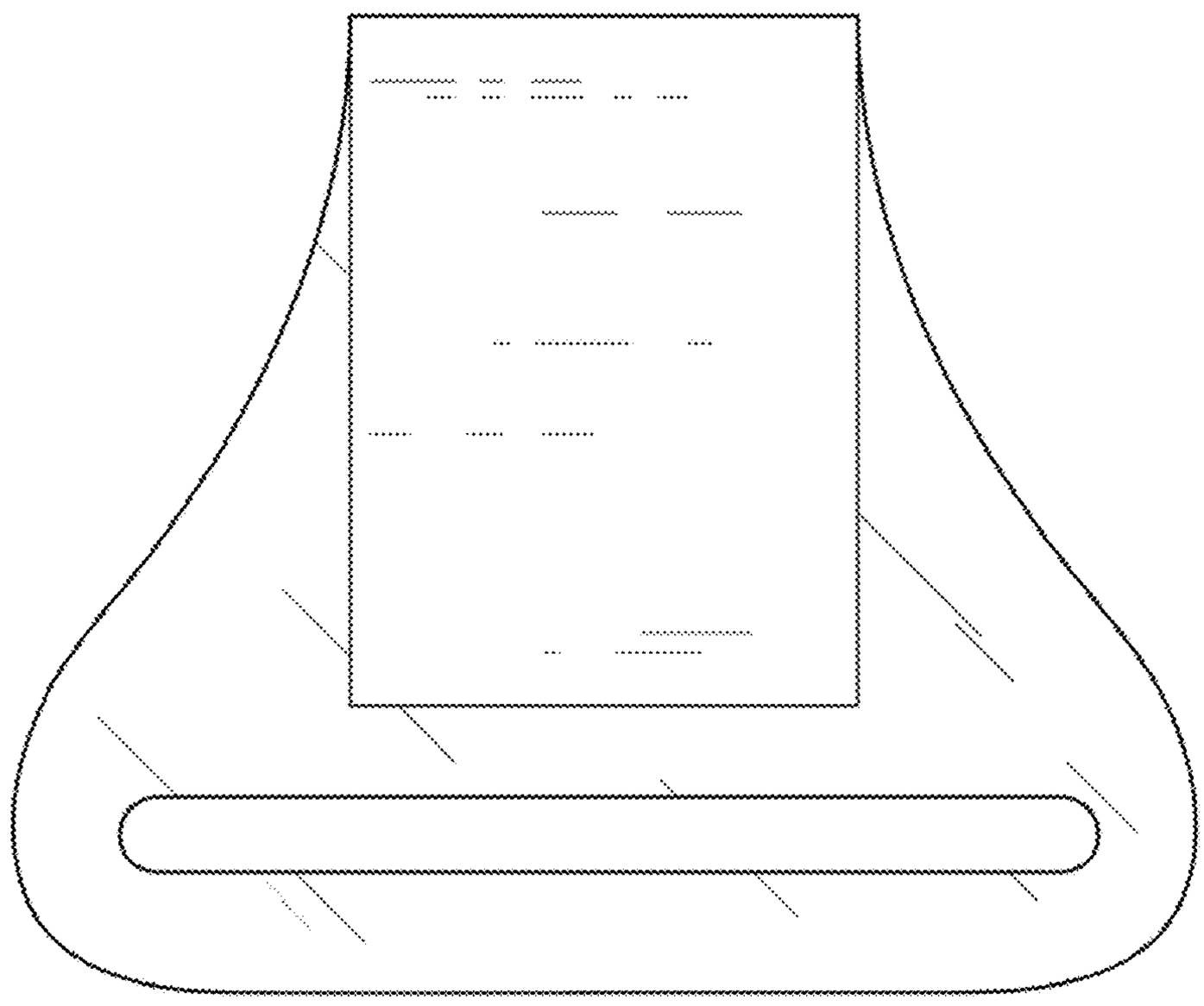

FIG. 6

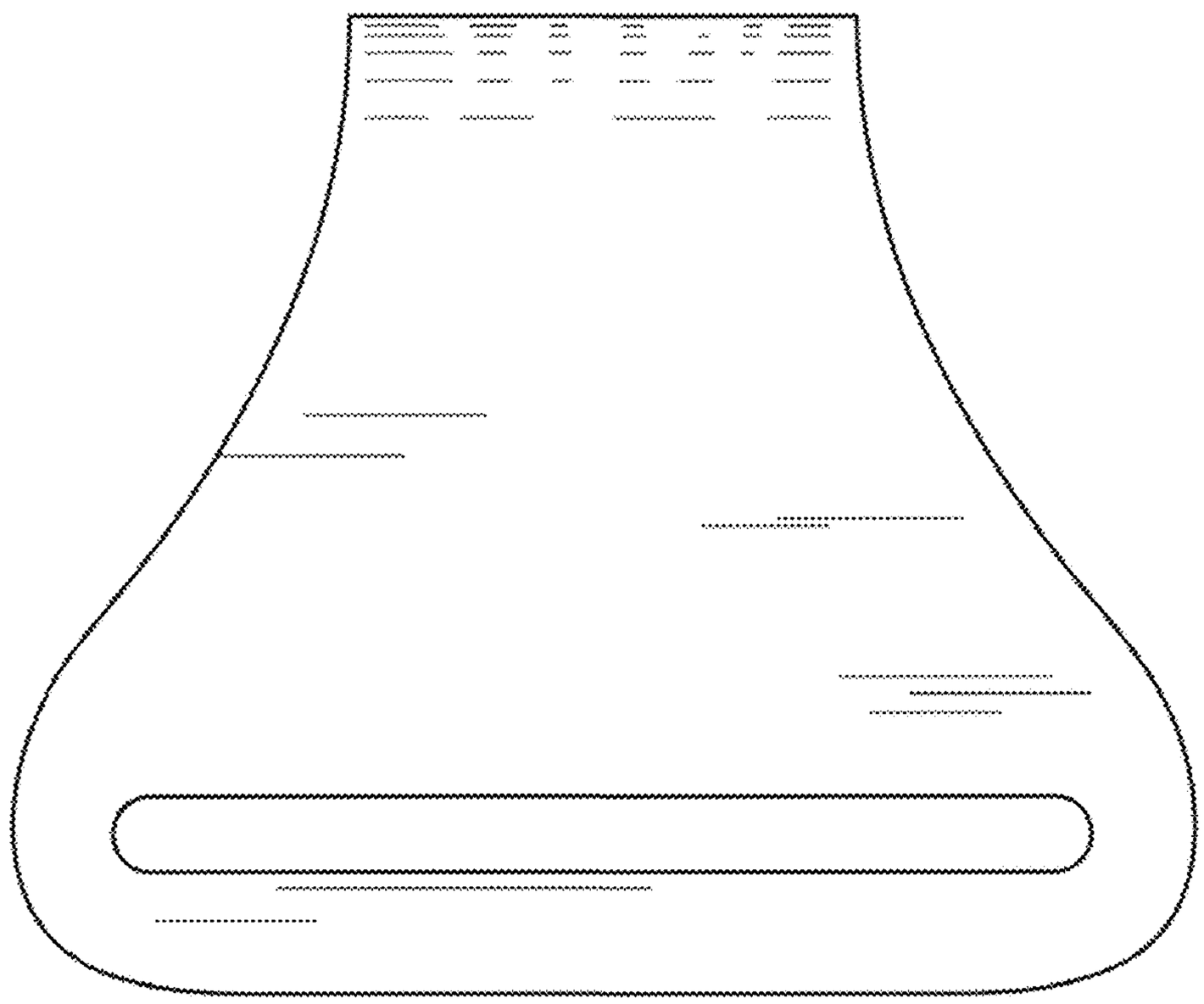

FIG. 7

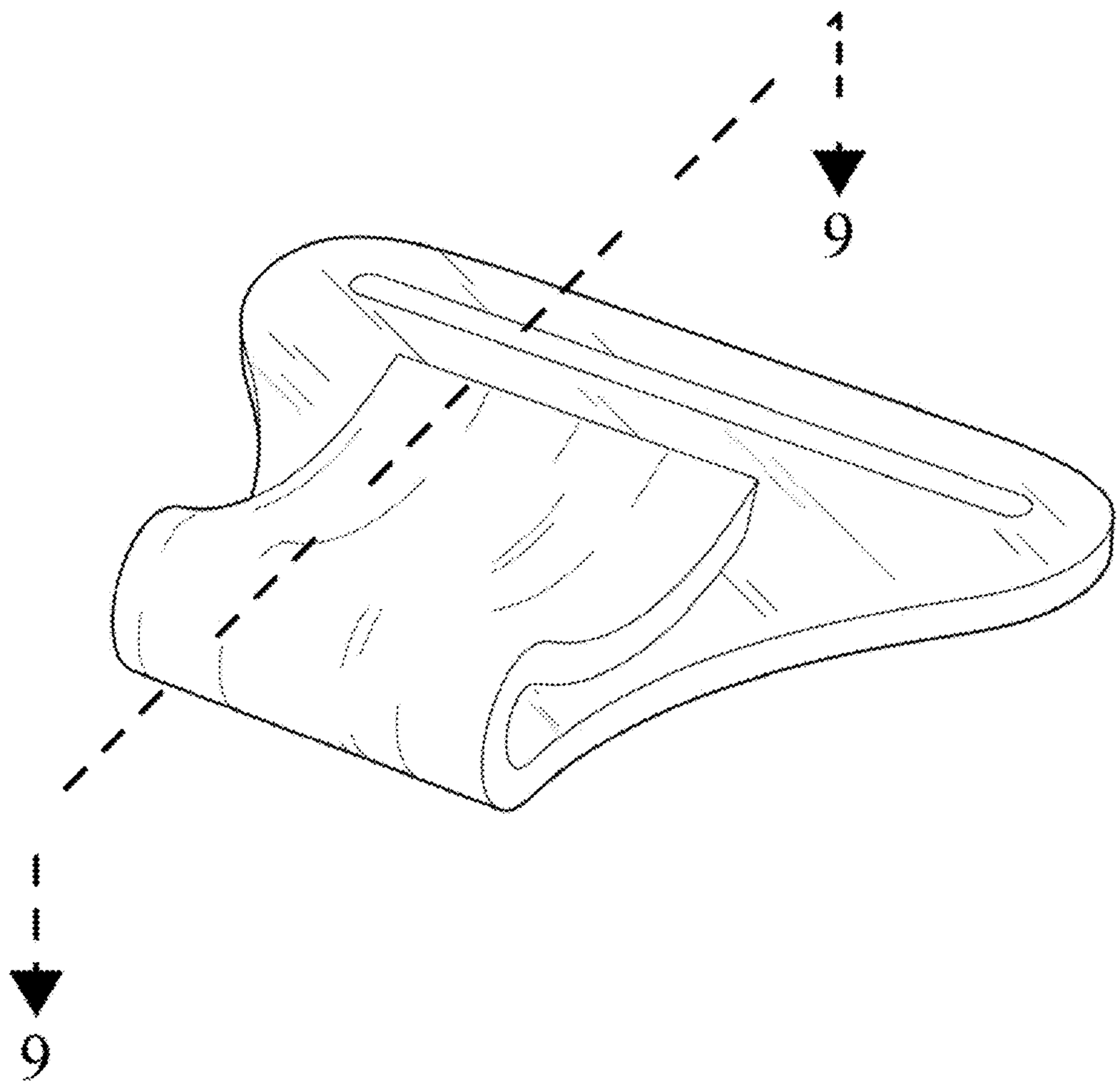

FIG. 8

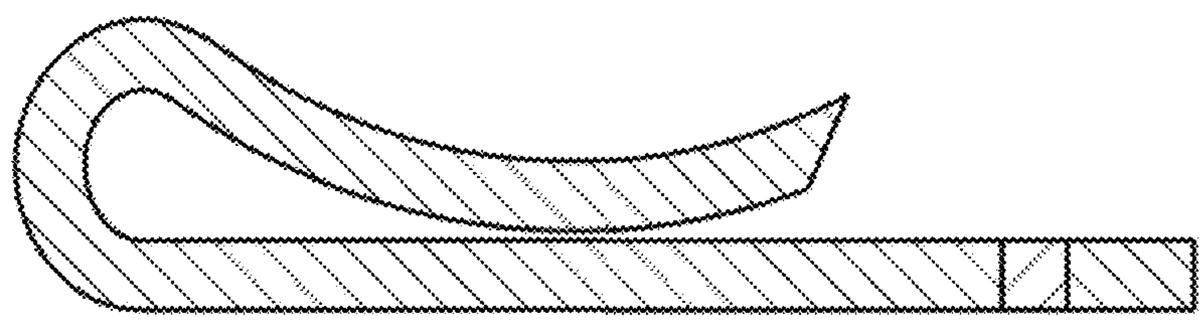

FIG. 9

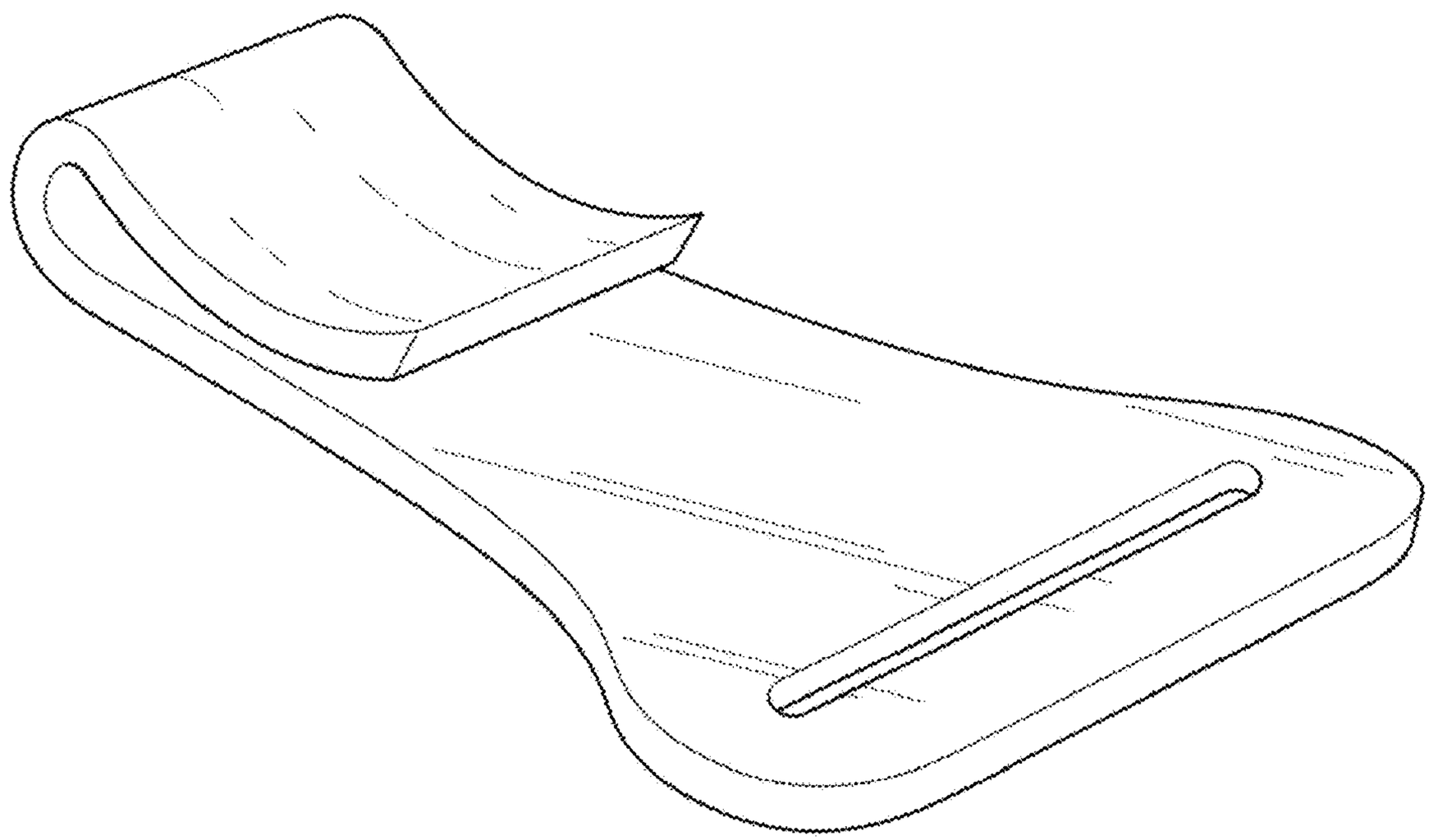

FIG. 10

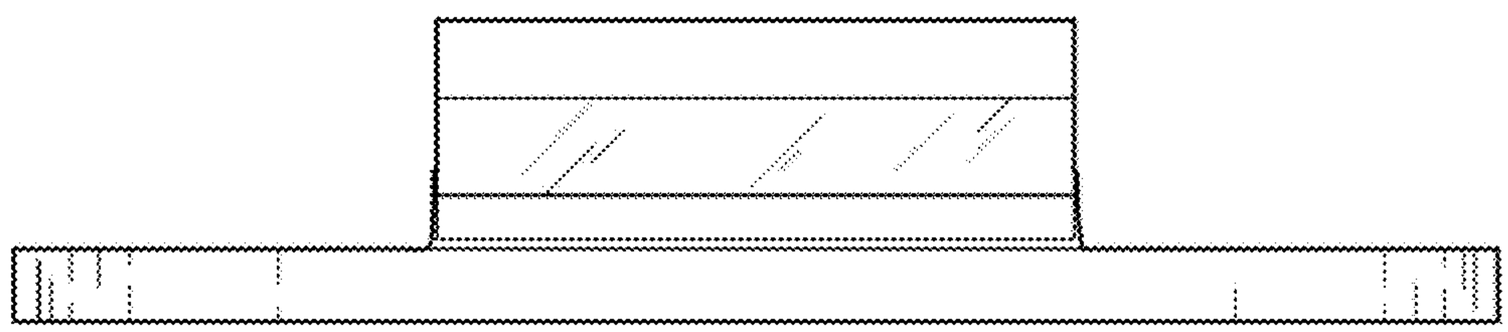

FIG. 11

FIG. 12

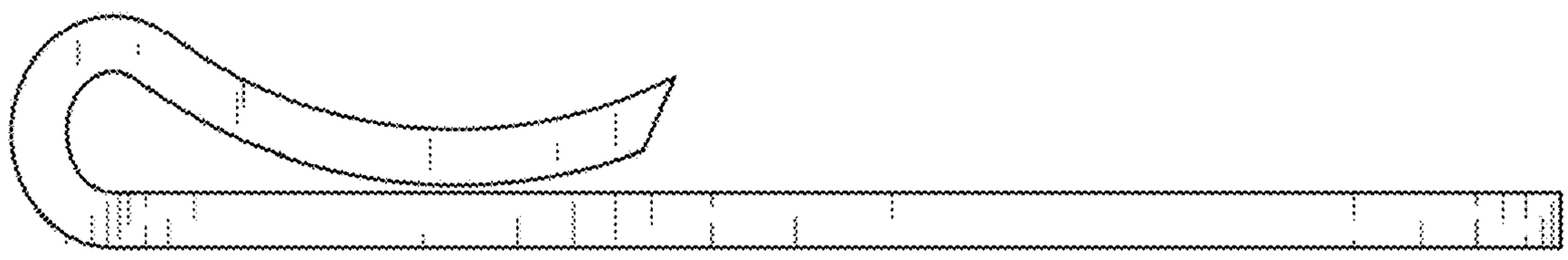

FIG. 13

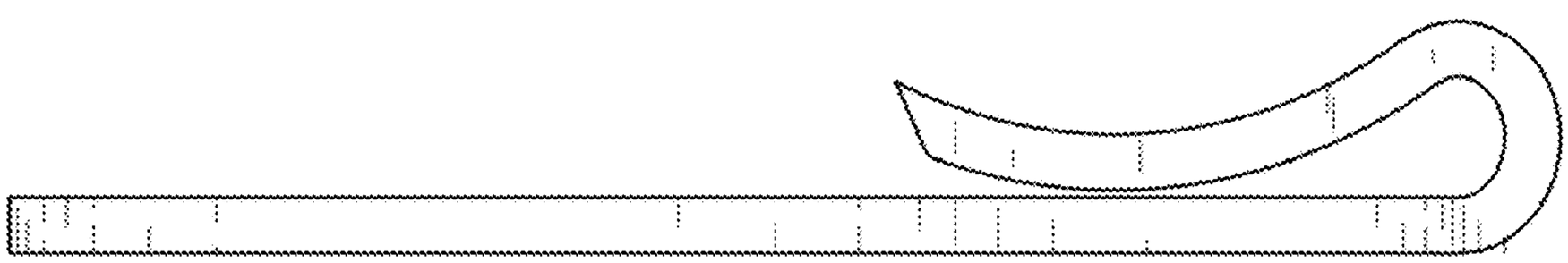

FIG. 14

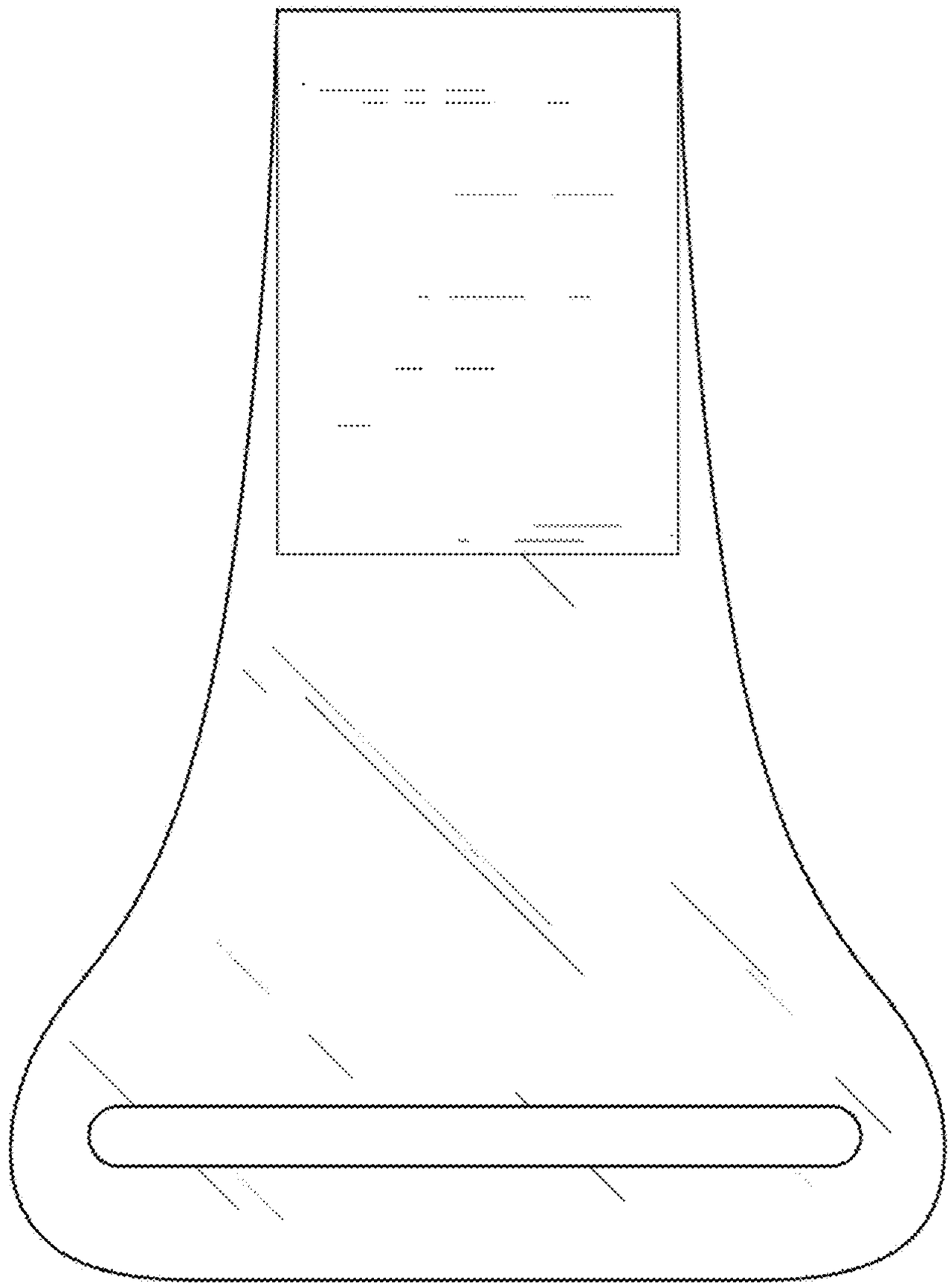

FIG. 15

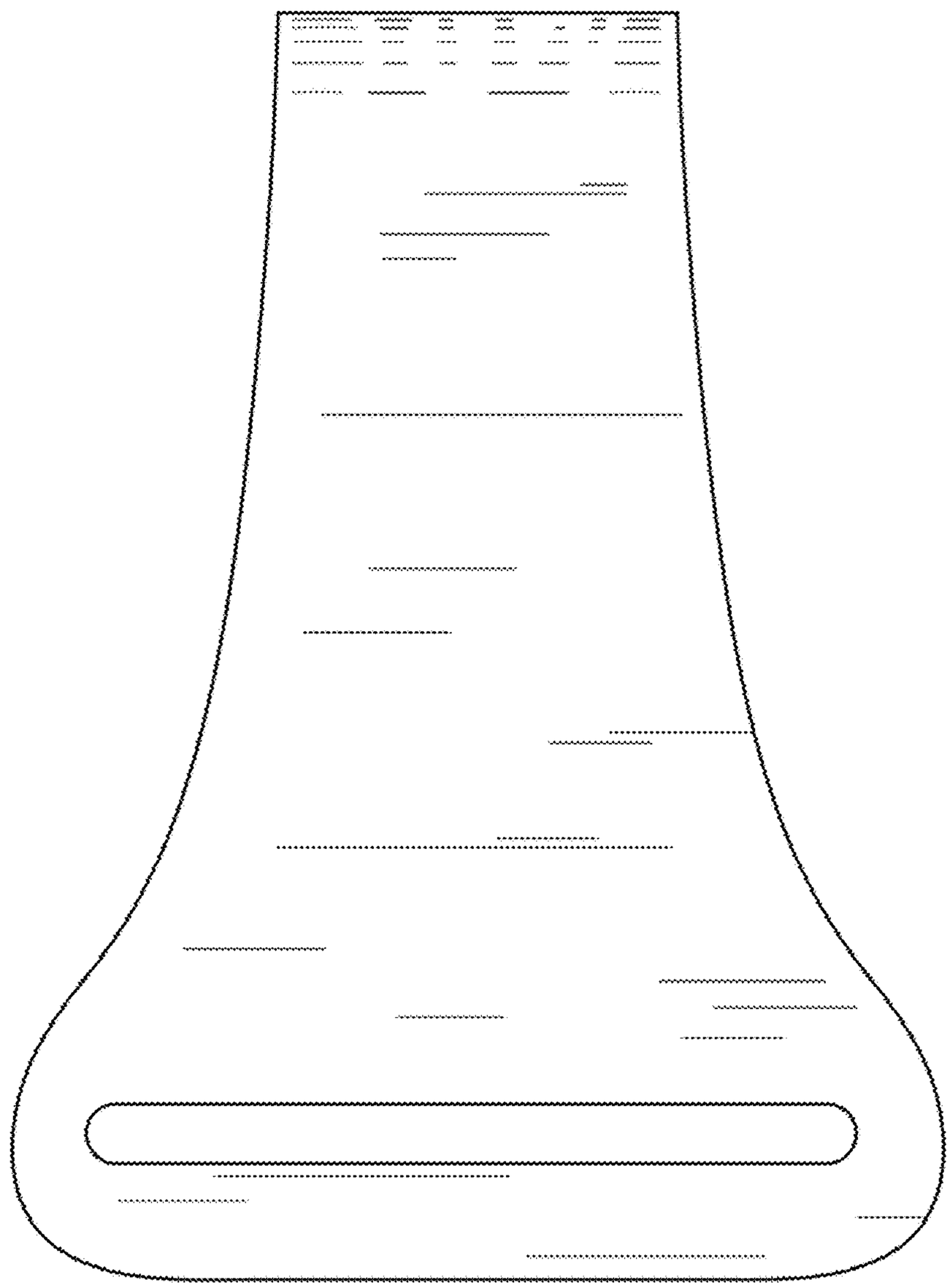

FIG. 16

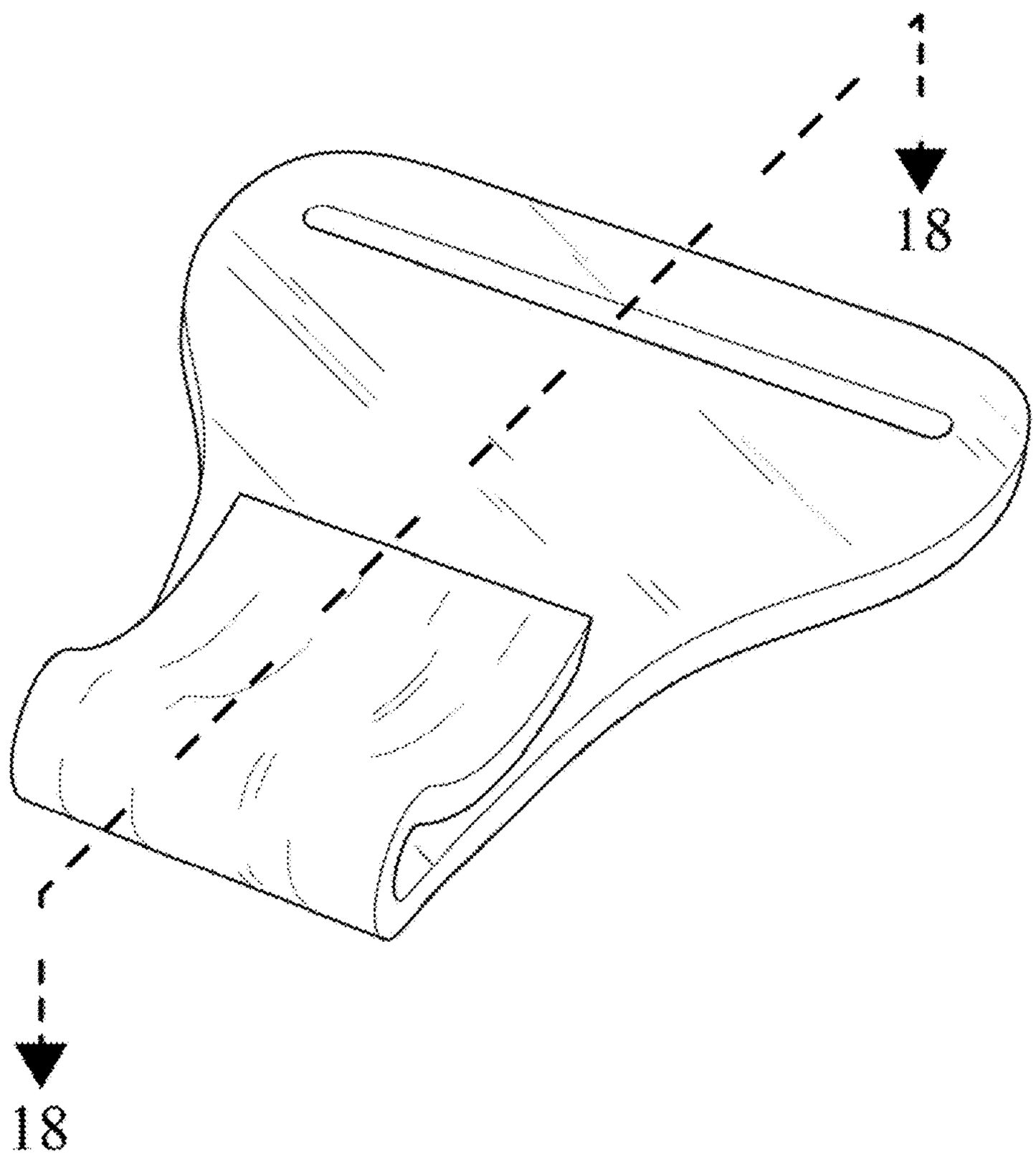

FIG. 17

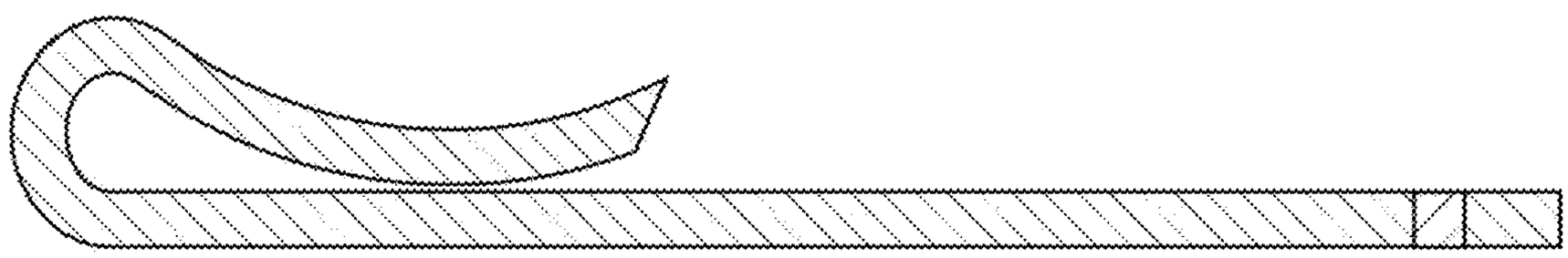

FIG. 18