US00D828419S

(12) United States Design Patent

de Lore

(10) Patent No.: US D828,419 S
(45) Date of Patent: ** Sep. 11, 2018

(54) **IDLER ROLLER**

(71) Applicant: **Joy MM Delaware, Inc.**, Wilmington, DE (US)

(72) Inventor: **Andrew P. de Lore**, Yattalunga (AU)

(73) Assignee: **Joy Global Underground Mining LLC**, Warrendale, PA (US)

(**) Term: **15 Years**

(21) Appl. No.: **29/555,599**

(22) Filed: **Feb. 23, 2016**

(51) **LOC (11) Cl.** **15-09**
(52) **U.S. Cl.**
USPC **D15/143**
(58) **Field of Classification Search**
USPC D15/143, 199
(Continued)

(56) **References Cited**

U.S. PATENT DOCUMENTS

D322,553 S * 12/1991 Kanemitsu D8/360
D338,621 S * 8/1993 Balson D9/434
(Continued)

FOREIGN PATENT DOCUMENTS

AU	2003208061	1/2004
AU	2004270321	3/2005
AU	2009200306	8/2010

Primary Examiner — Patricia A Palasik
(74) *Attorney, Agent, or Firm* — Michael Best & Friedrich LLP

(57) **CLAIM**

The ornamental design for an idler roller, as shown and described.

DESCRIPTION

FIG. **1** is a perspective view of an idler roller showing our new design.
FIG. **2** is a cross-section view of the idler roller shown in FIG. **1**.
FIG. **3** is a side view of the idler roller shown in FIG. **1**.
FIG. **4** is an end view of the idler roller shown in FIG. **1**.
FIG. **5** is a perspective view of an idler roller showing our new design.
FIG. **6** is a cross-section view of the idler roller shown in FIG. **5**.
FIG. **7** is a side view of the idler roller shown in FIG. **5**.
FIG. **8** is an end view of the idler roller shown in FIG. **5**.
FIG. **9** is a perspective view of an idler roller showing our new design.
FIG. **10** is a cross-section view of the idler roller shown in FIG. **9**.
FIG. **11** is a side view of the idler roller shown in FIG. **9**.
FIG. **12** is an end view of the idler roller shown in FIG. **9**.
FIG. **13** is a perspective view of an idler roller showing our new design.
FIG. **14** is a cross-section view of the idler roller shown in FIG. **13**.
FIG. **15** is a side view of the idler roller shown in FIG. **13**.
FIG. **16** is an end view of the idler roller shown in FIG. **13**.
FIG. **17** is a perspective view of an idler roller showing our new design.
FIG. **18** is a cross-section view of the idler roller shown in FIG. **17**.
FIG. **19** is a side view of the idler roller shown in FIG. **17**.
FIG. **20** is an end view of the idler roller shown in FIG. **17**.
FIG. **21** is a perspective view of an idler roller showing our new design.
FIG. **22** is a cross-section view of the idler roller shown in FIG. **21**.
FIG. **23** is a side view of the idler roller shown in FIG. **21**.
FIG. **24** is an end view of the idler roller shown in FIG. **21**.
FIG. **25** is a perspective view of an idler roller showing our new design.
FIG. **26** is a cross-section view of the idler roller shown in FIG. **25**.
FIG. **27** is a side view of the idler roller shown in FIG. **25**.
FIG. **28** is an end view of the idler roller shown in FIG. **25**.
FIG. **29** is a perspective view of an idler roller showing our new design.
FIG. **30** is a cross-section view of the idler roller shown in FIG. **29**.

(Continued)

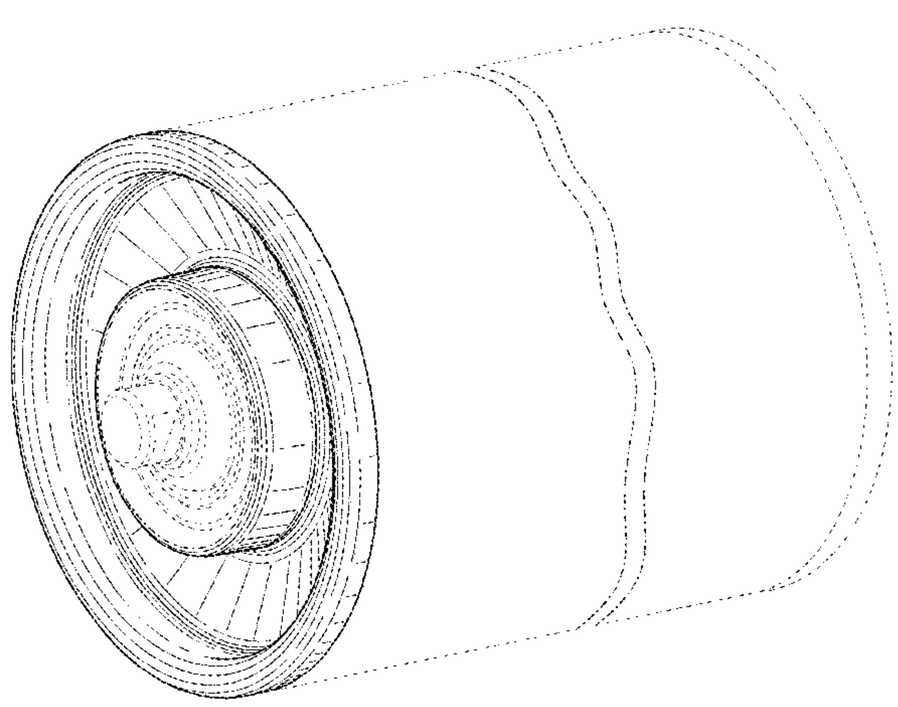

FIG. **31** is a side view of the idler roller shown in FIG. **29**; and,
FIG. **32** is an end view of the idler roller shown in FIG. **29**. The broken lines in the drawings depict unclaimed environmental subject matter.

1 Claim, 32 Drawing Sheets

(58) **Field of Classification Search**
CPC F16C 19/30; F16C 19/305; F16C 33/37; F16C 33/51; F16C 33/49; F16C 33/50; F16C 33/541; F16C 33/543; F16C 33/546; F16C 33/565; F16C 33/4676; F16C 33/4682; F16C 33/6696
See application file for complete search history.

(56) **References Cited**

U.S. PATENT DOCUMENTS

D703,160 S * 4/2014 Tanimura D13/182
D770,992 S * 11/2016 Tauchi D13/182

* cited by examiner

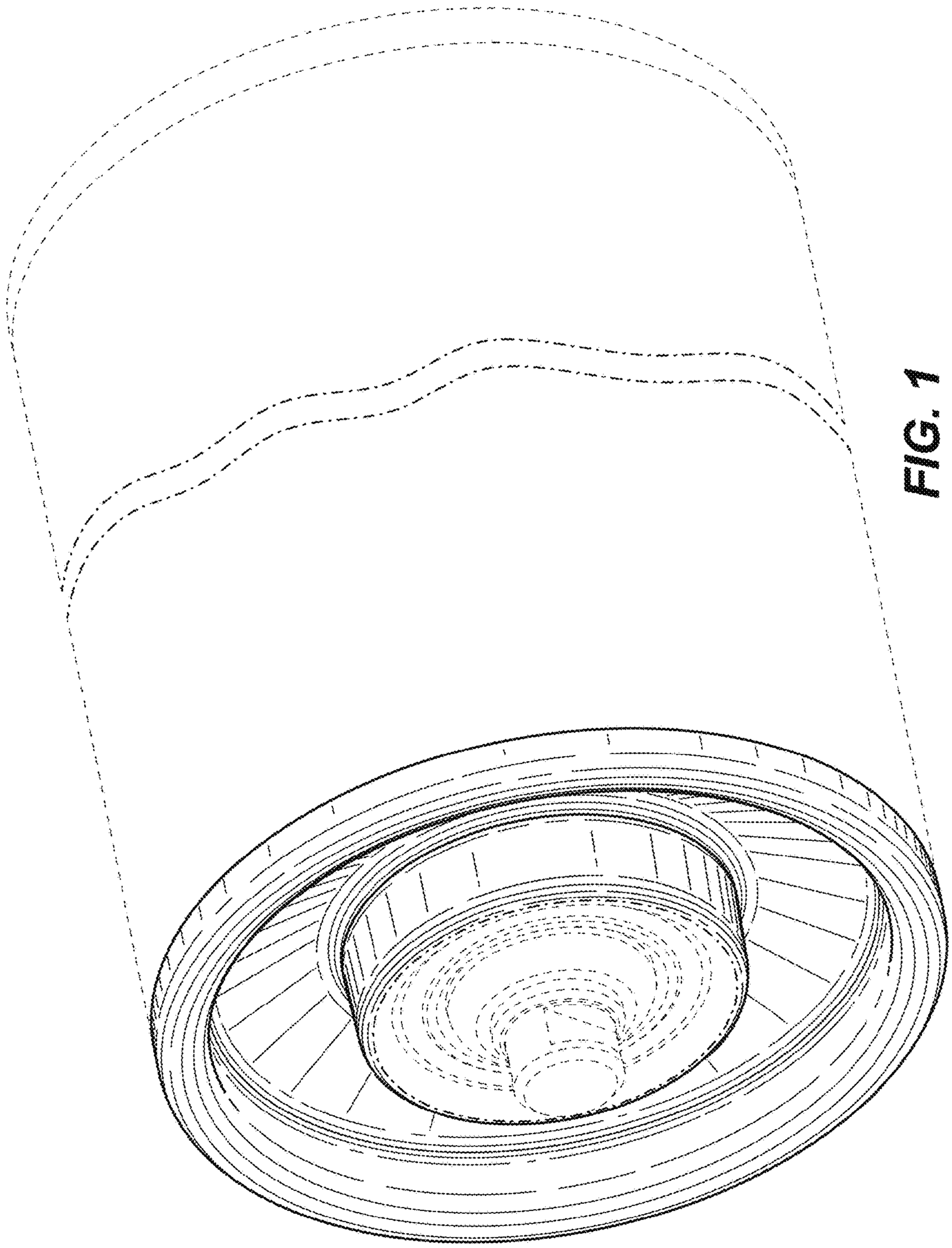

FIG. 1

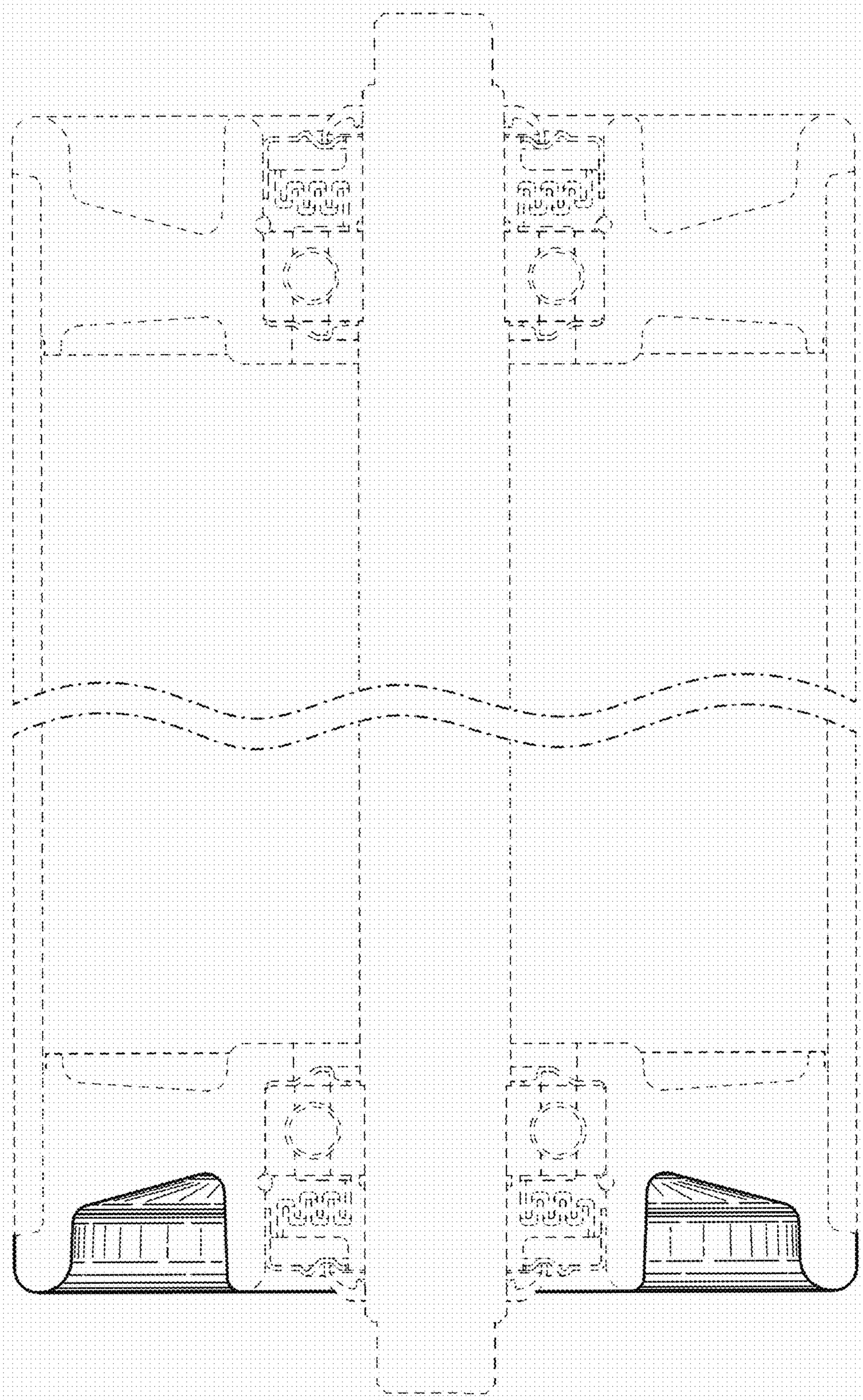

FIG. 2

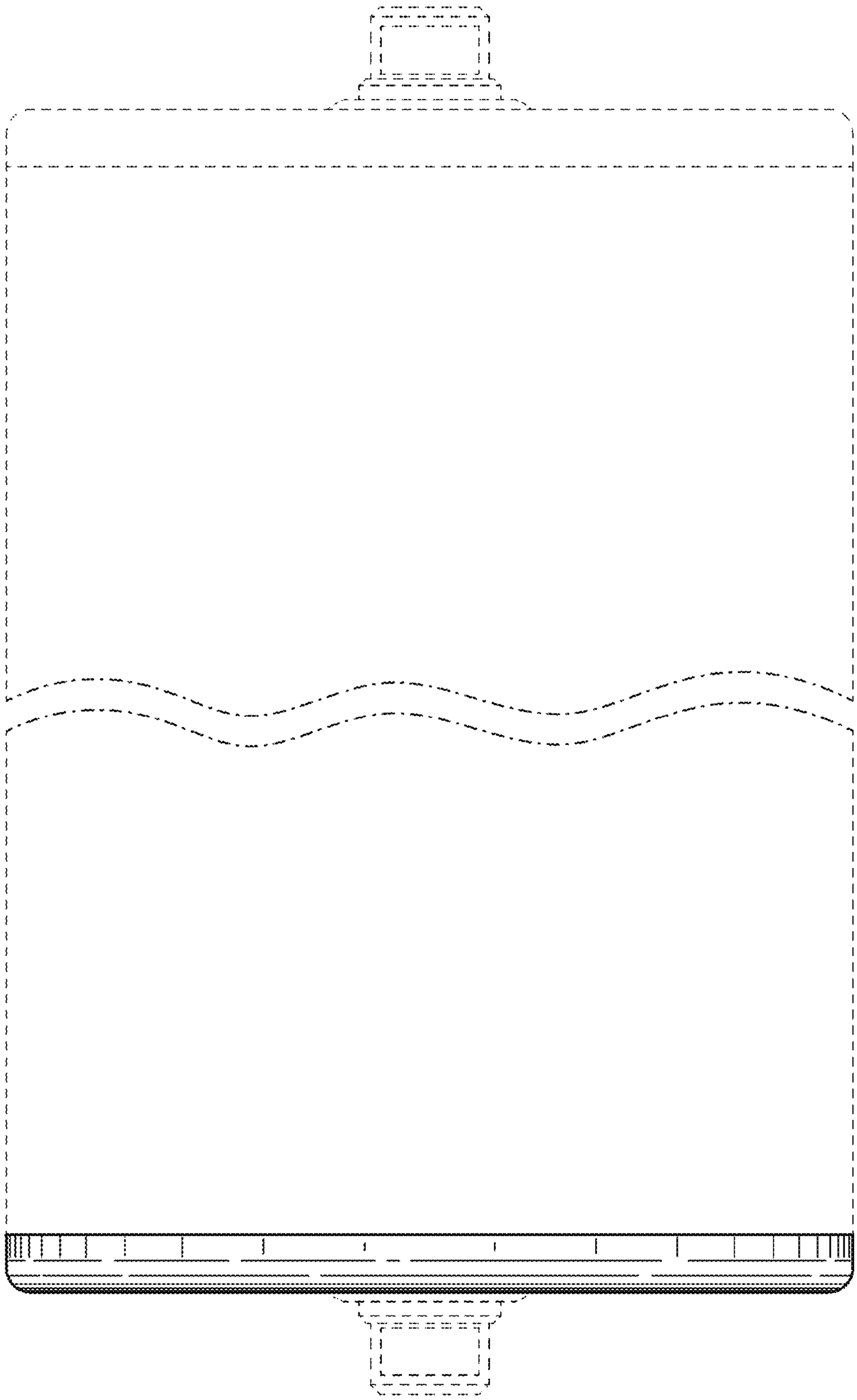

FIG. 3

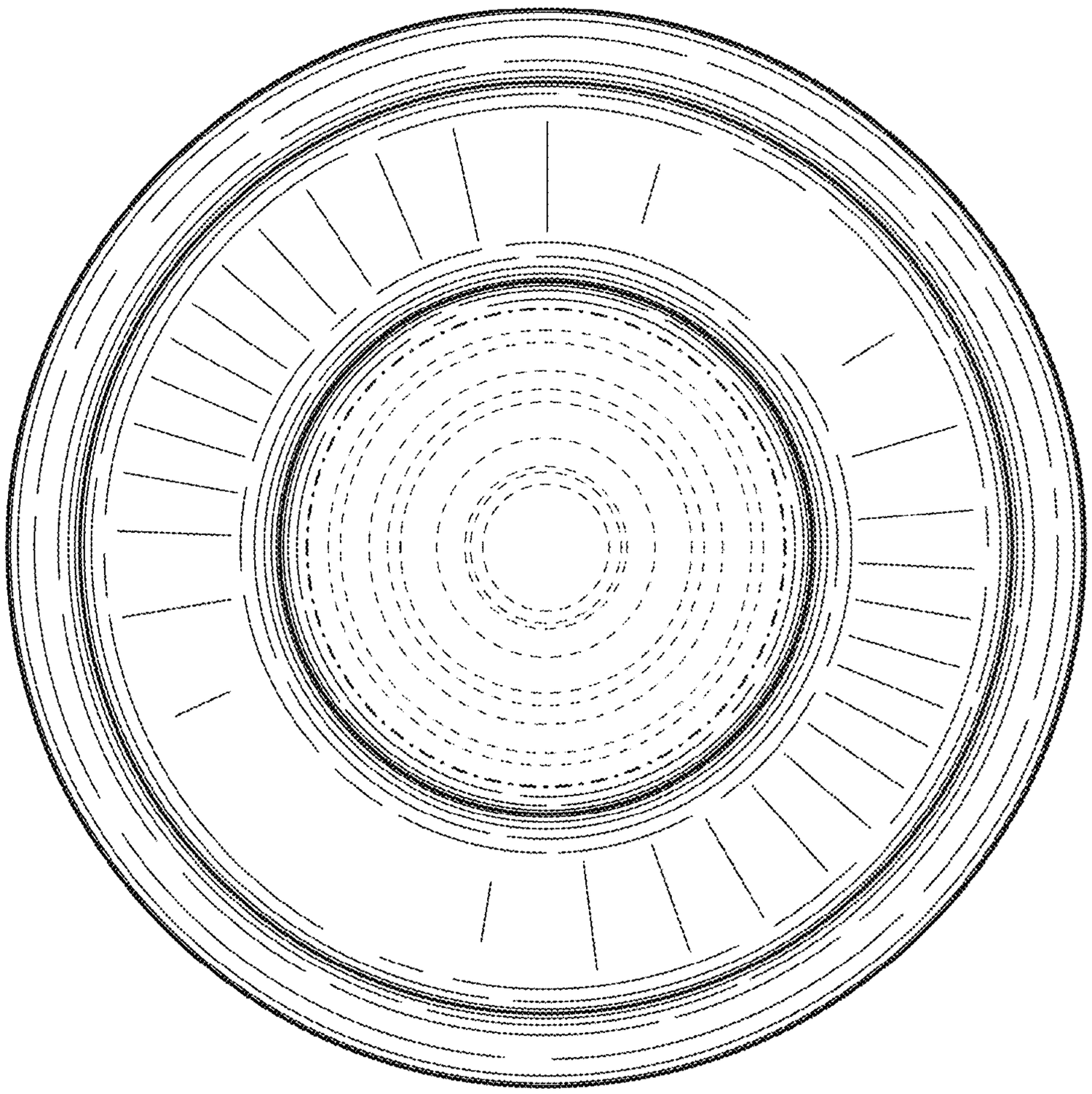

FIG. 4

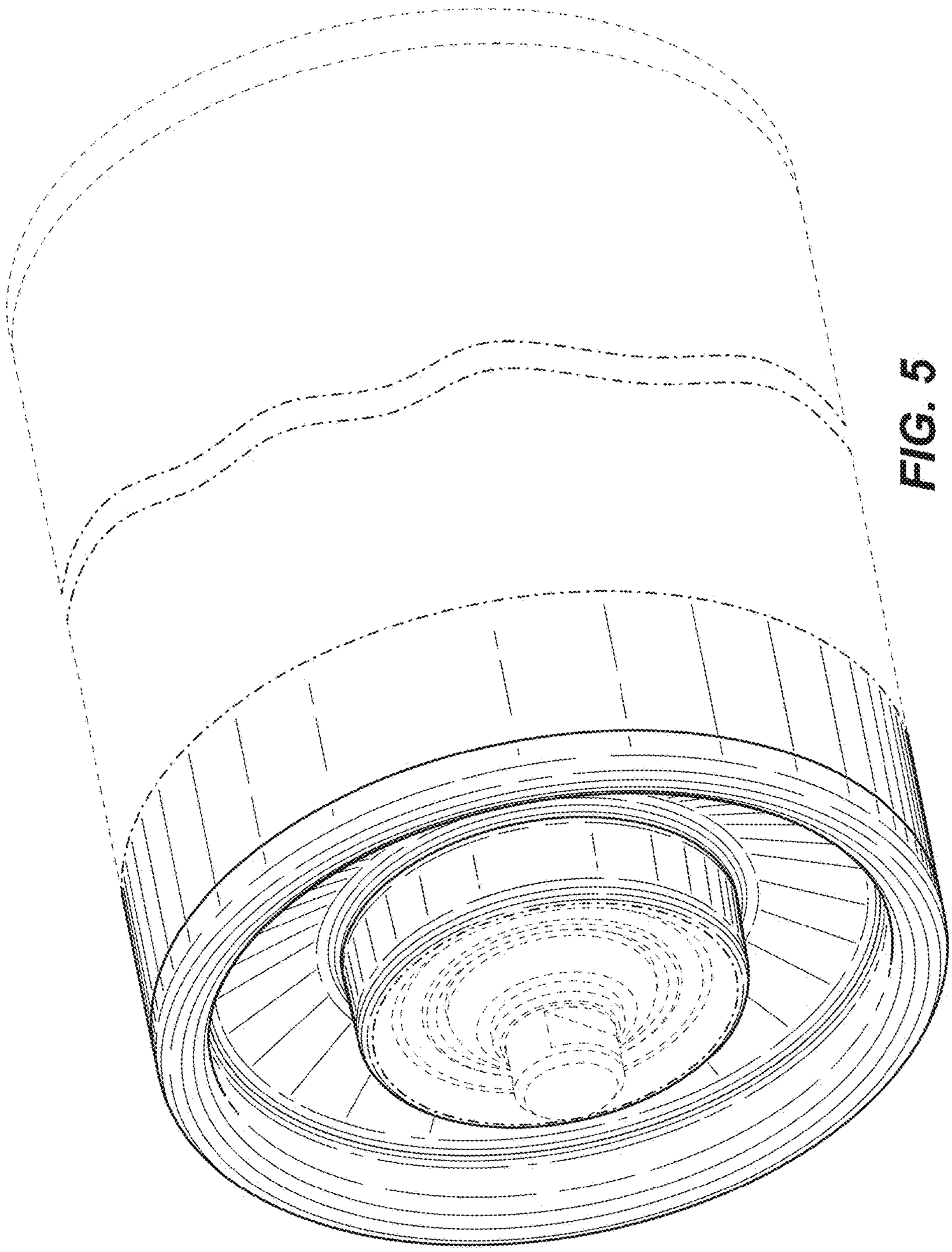

FIG. 5

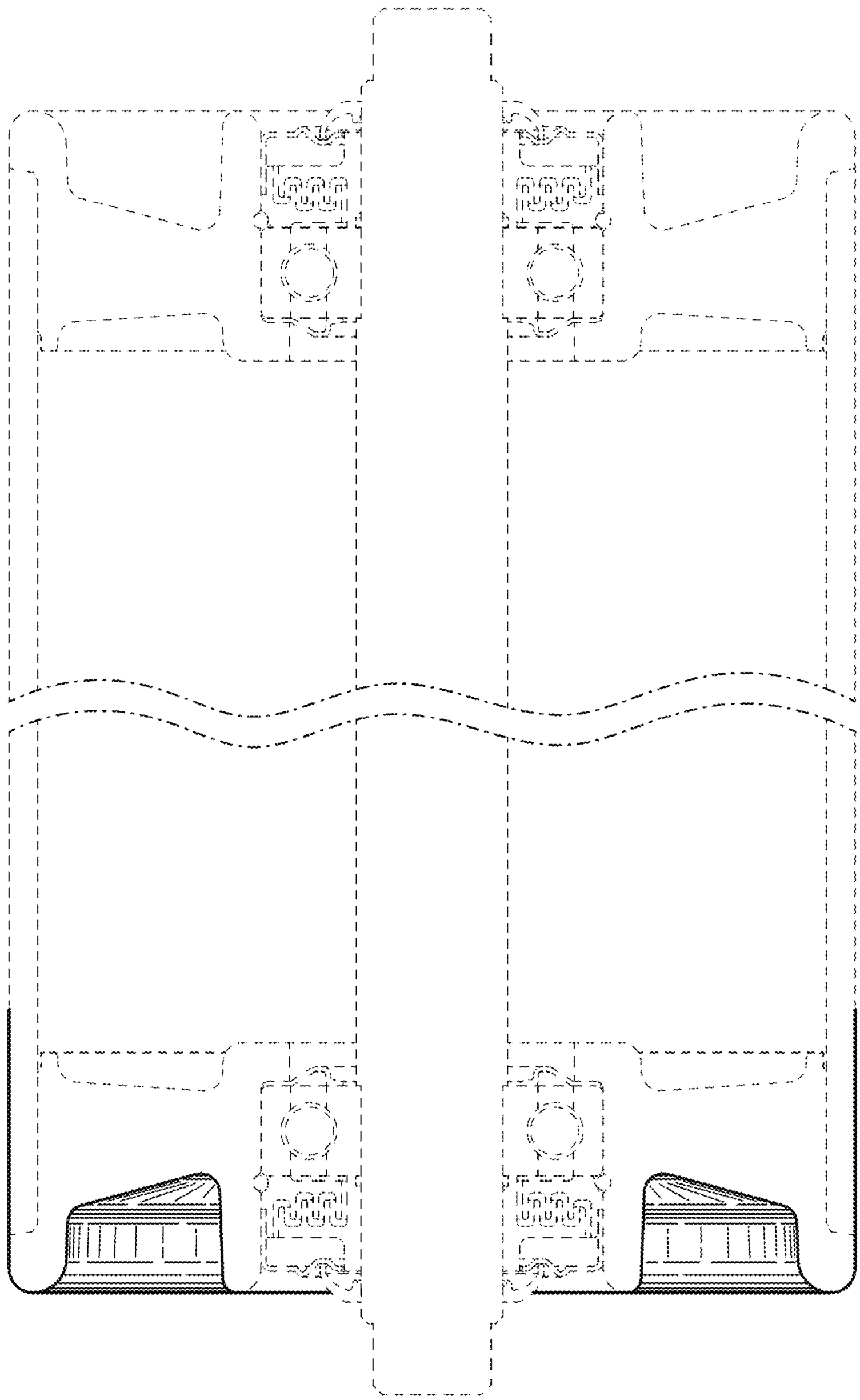

FIG. 6

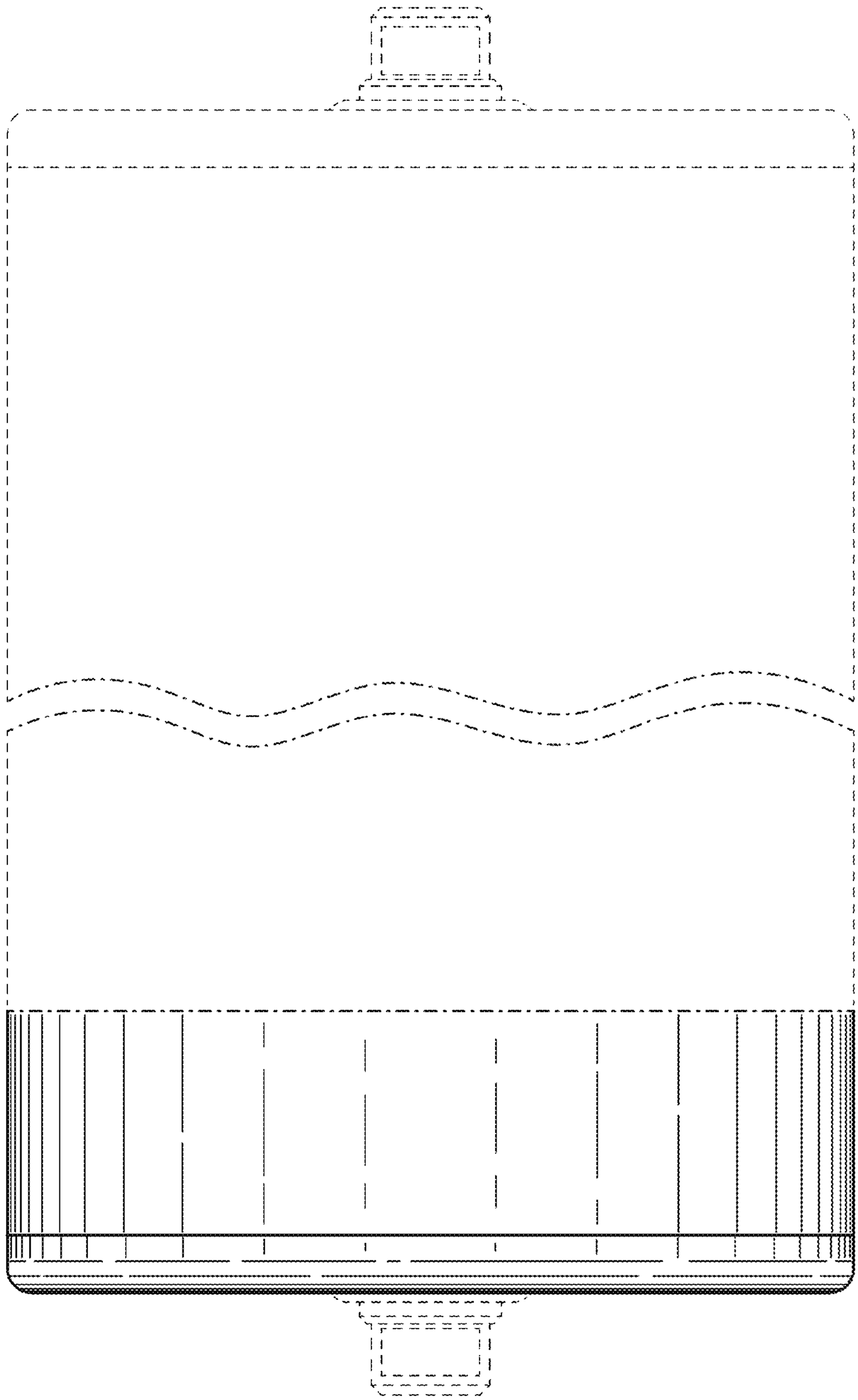

FIG. 7

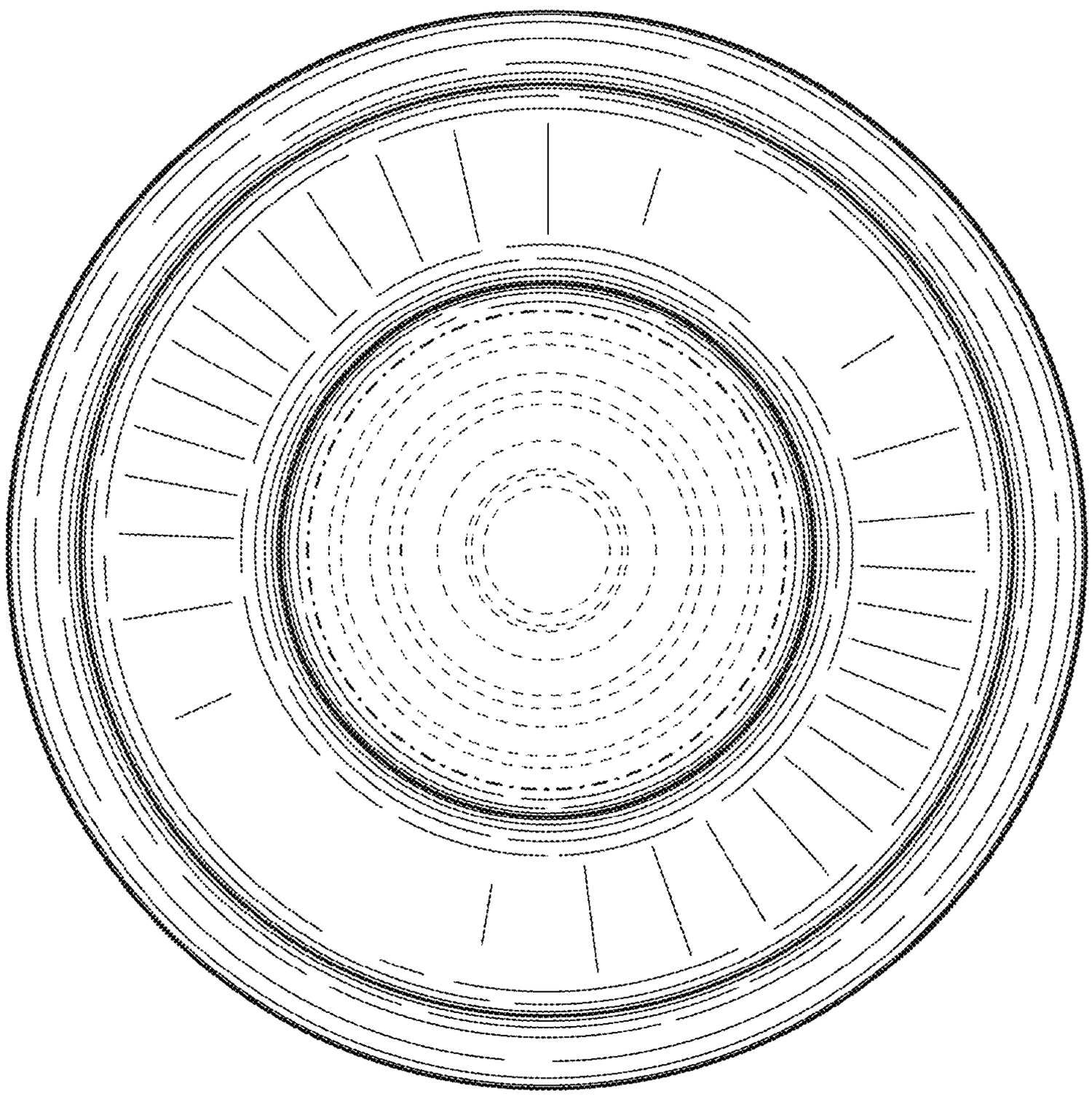

FIG. 8

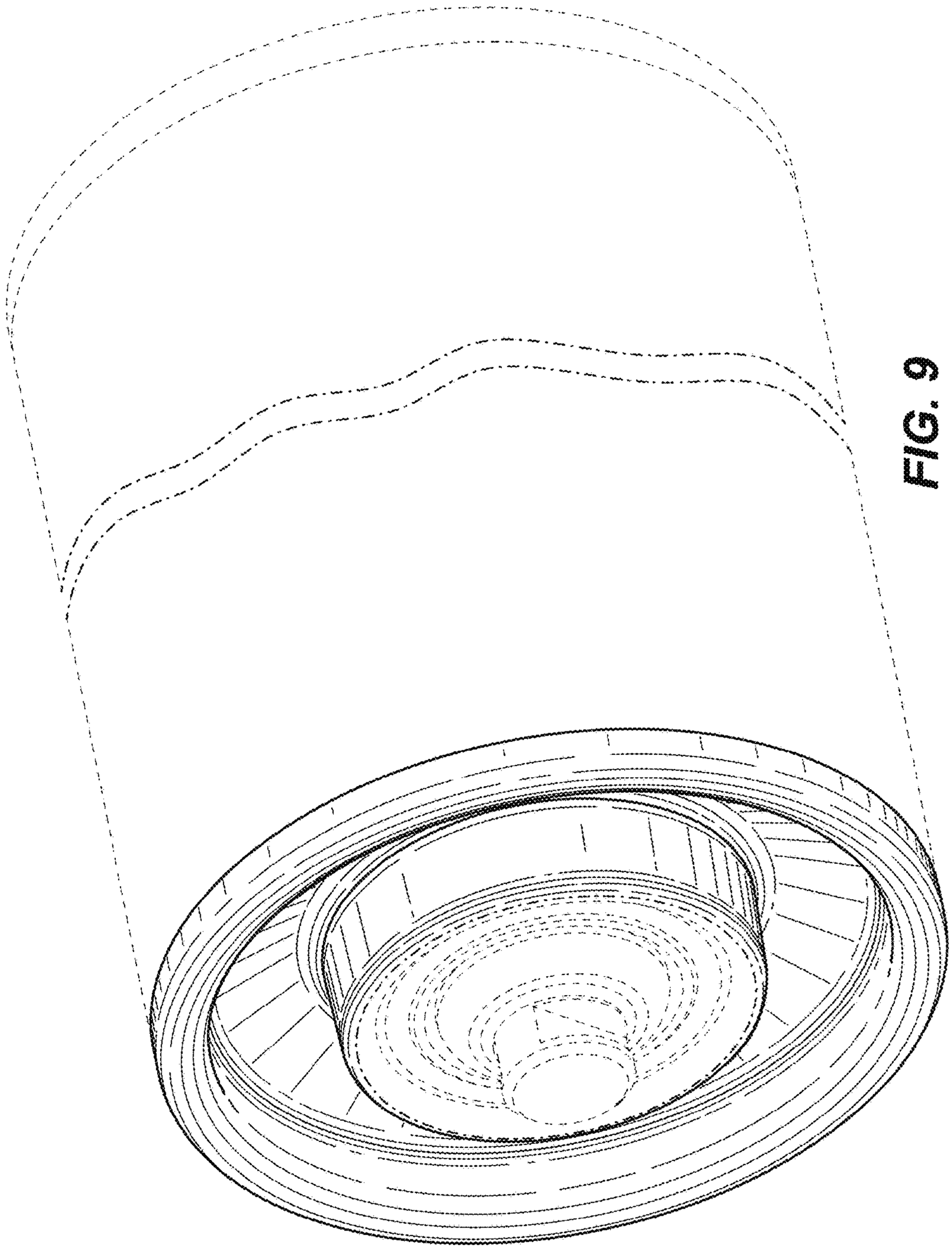

FIG. 9

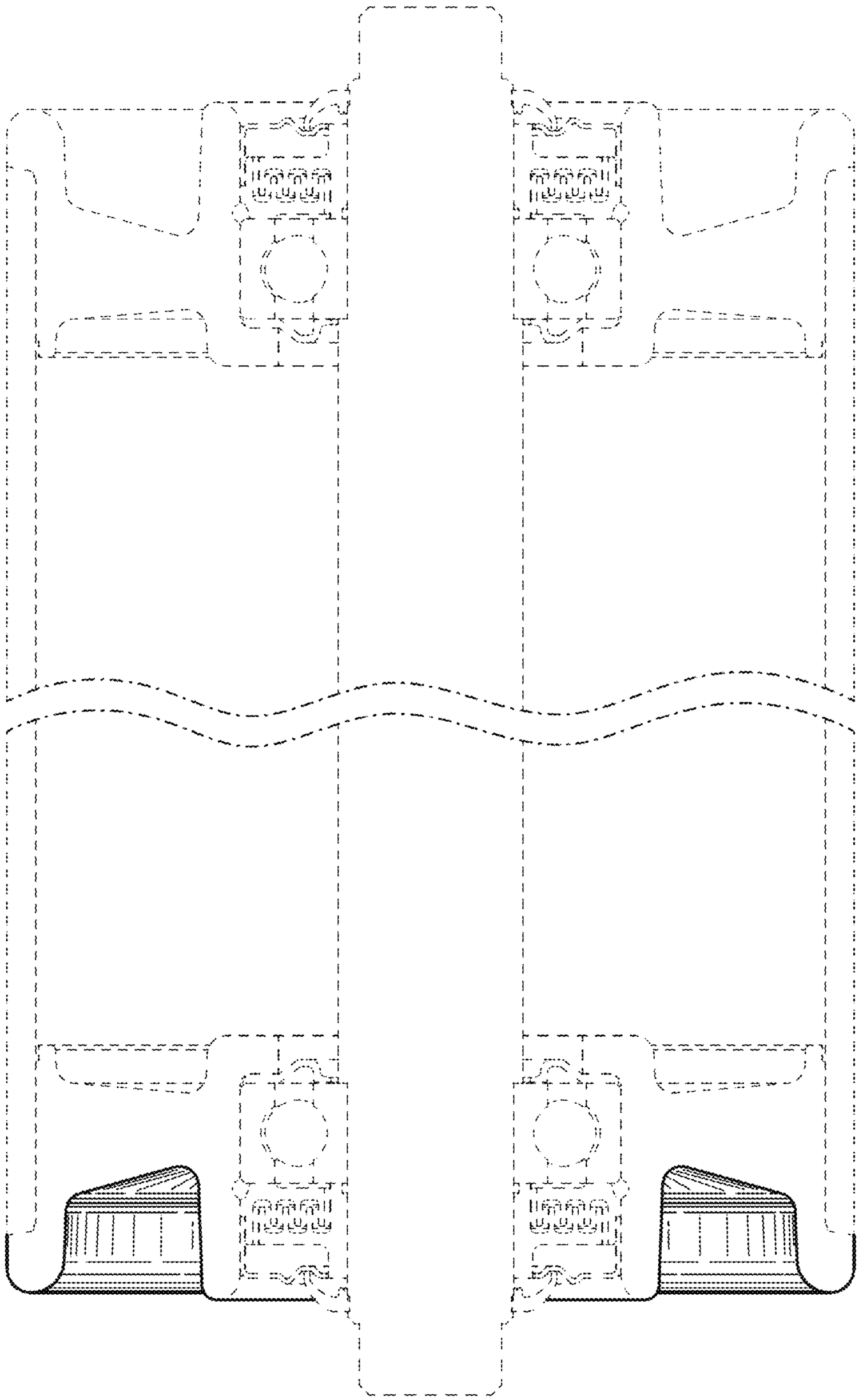

FIG. 10

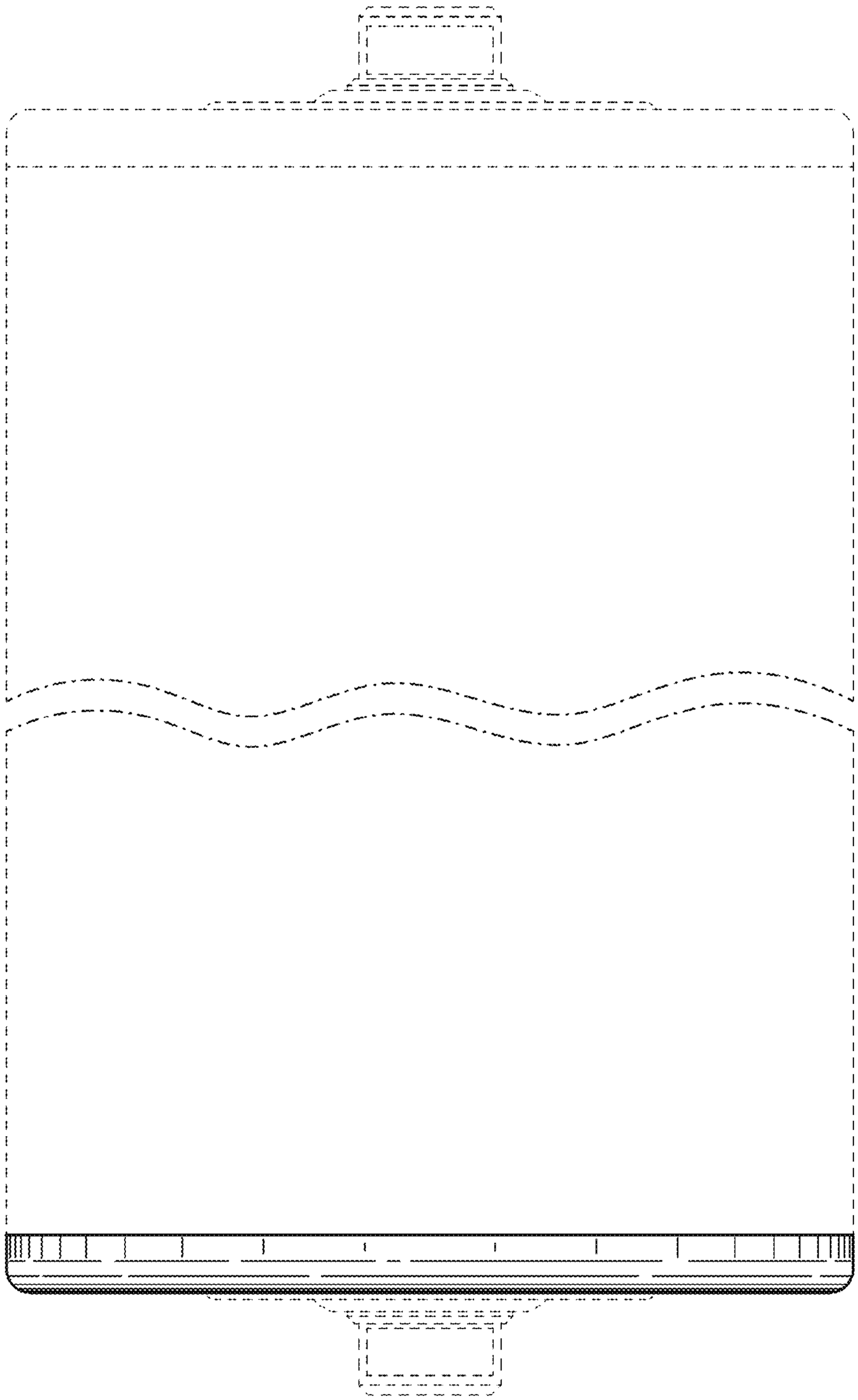

FIG. 11

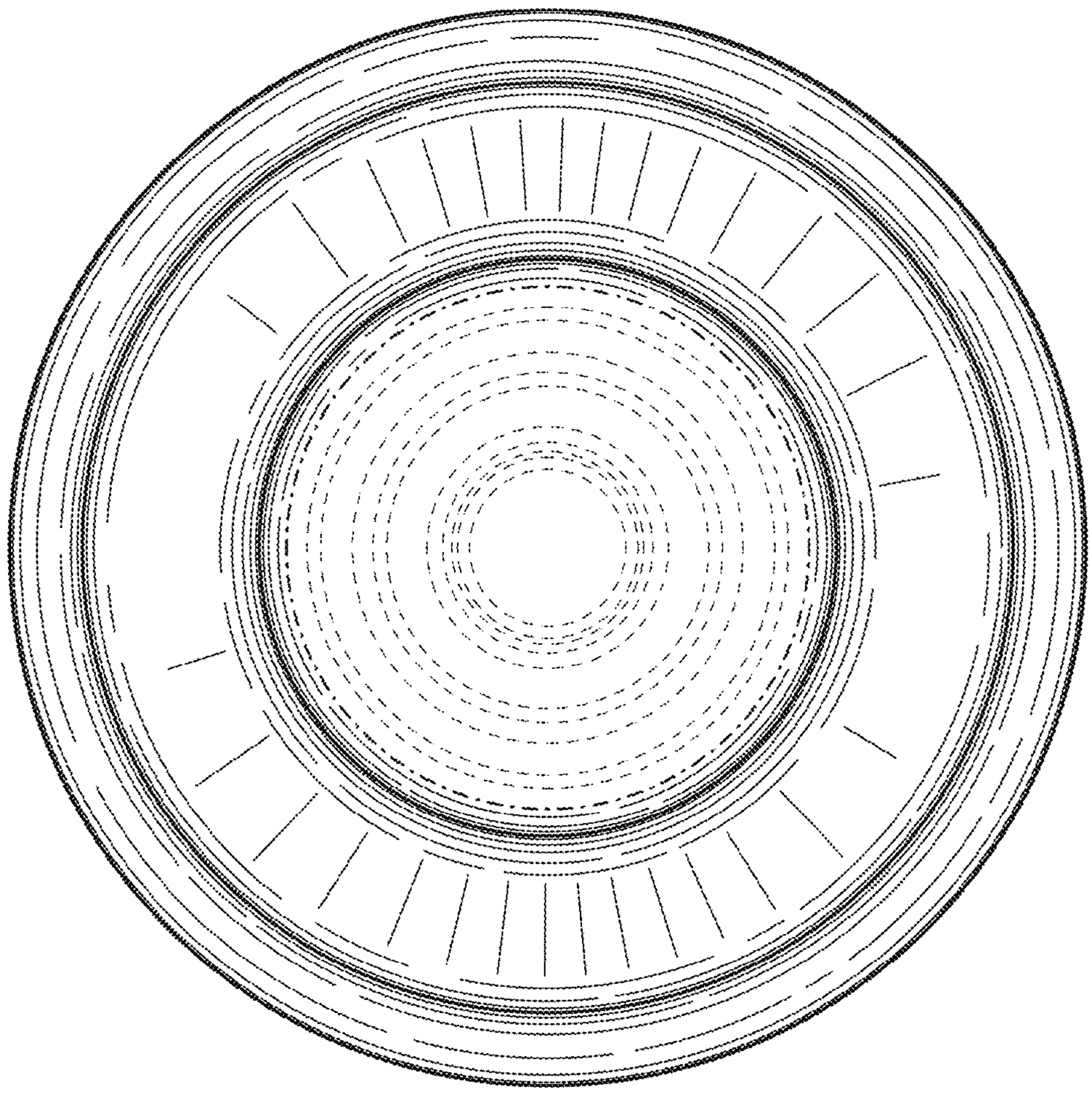

FIG. 12

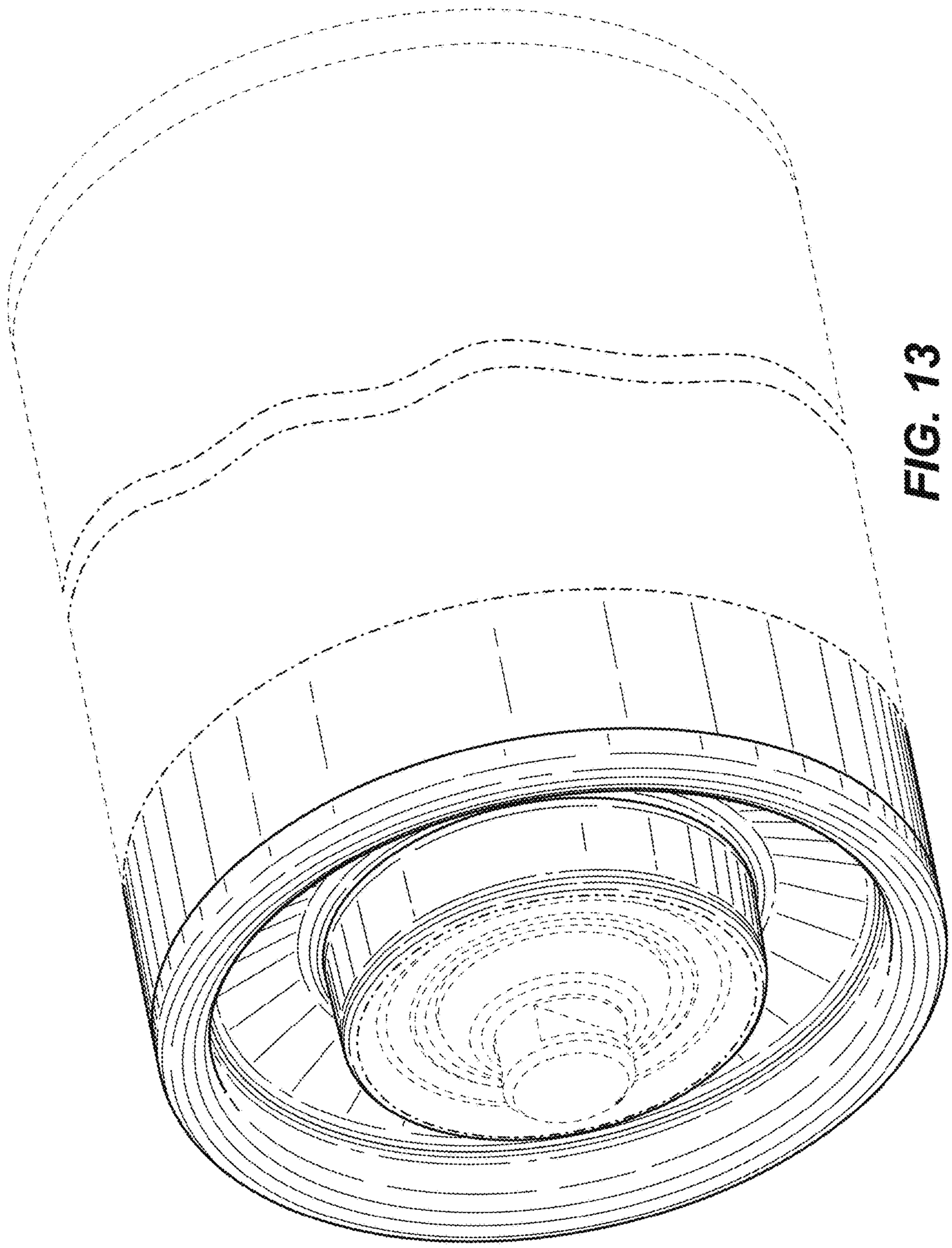

FIG. 13

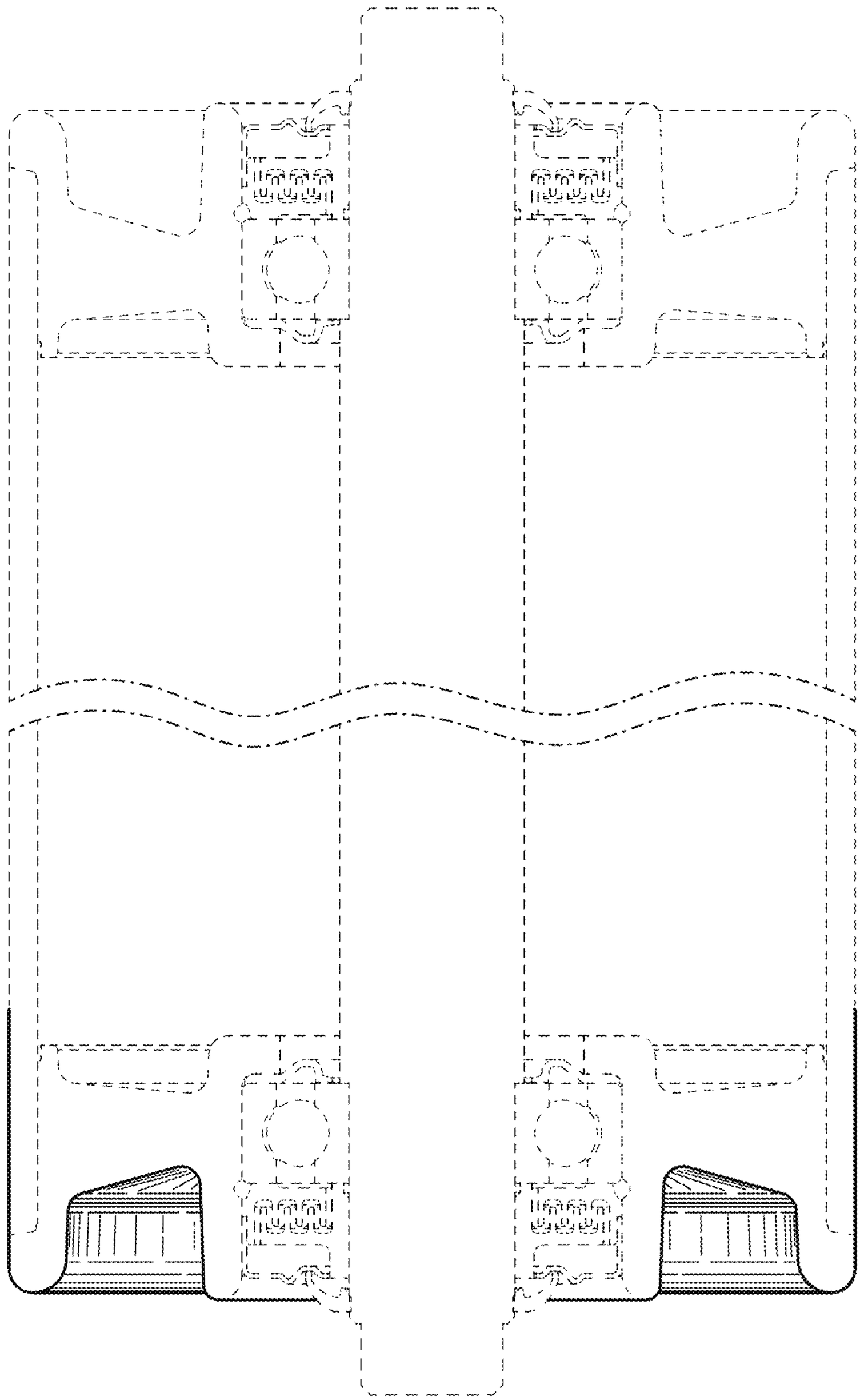

FIG. 14

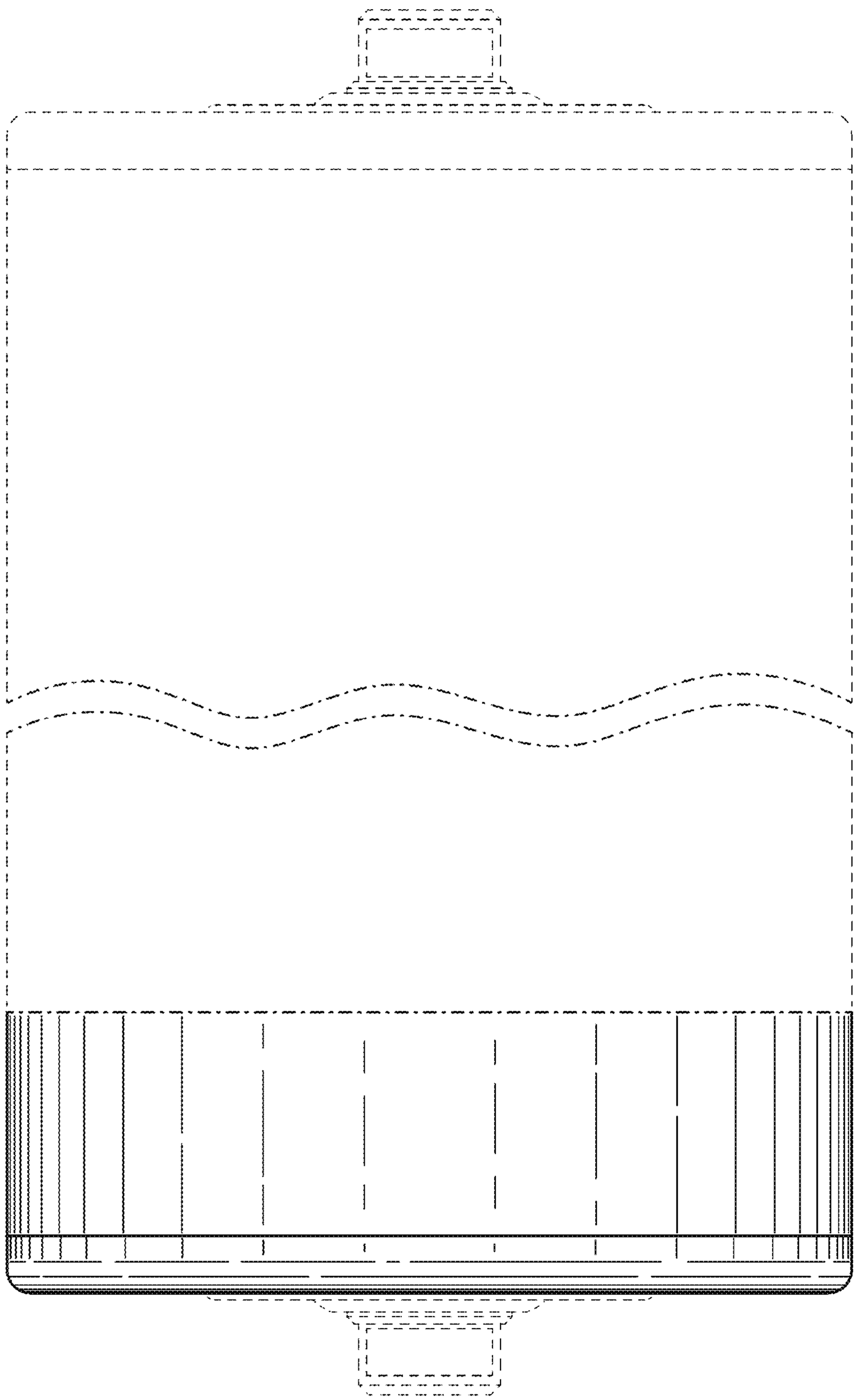

FIG. 15

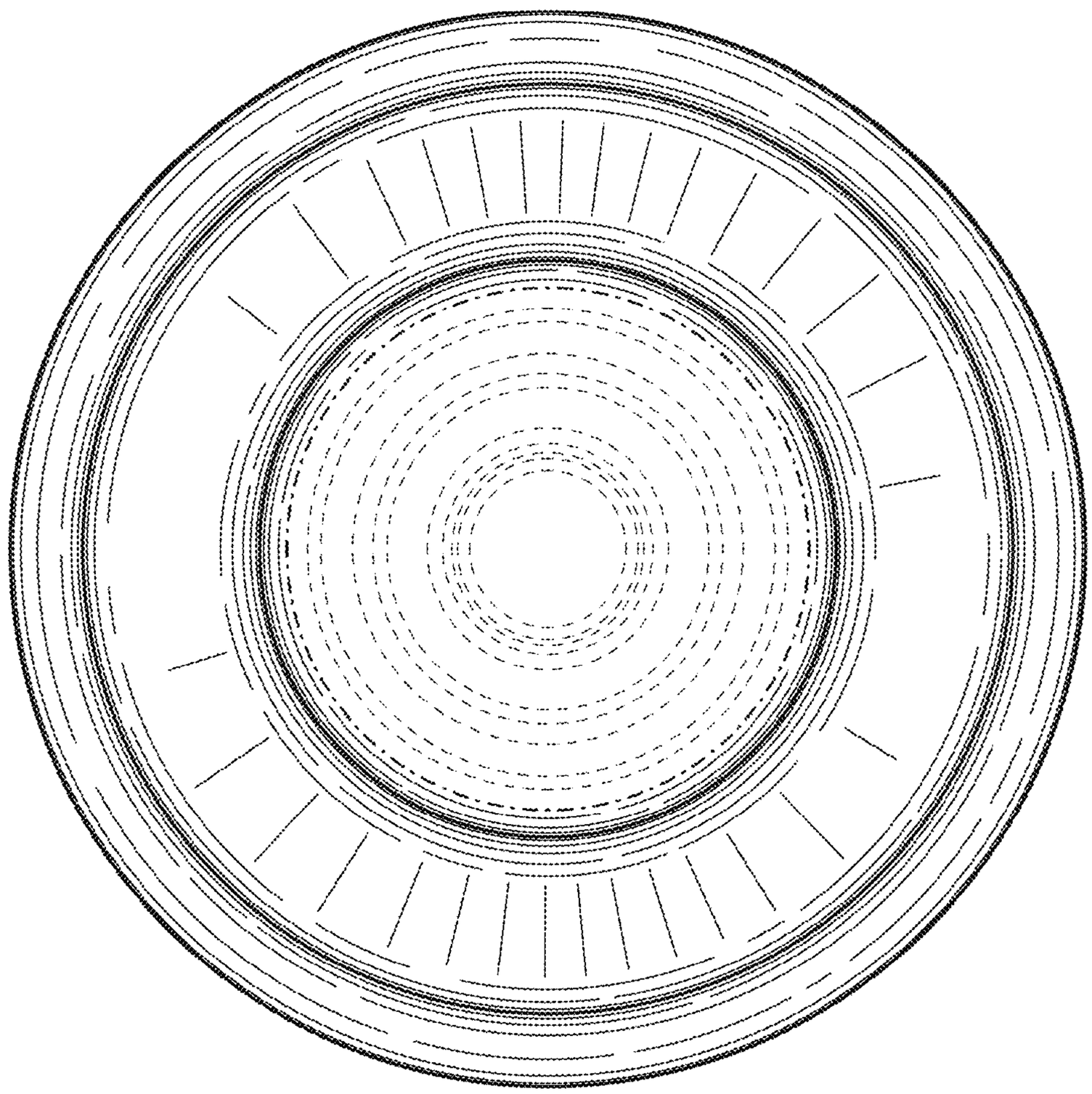

FIG. 16

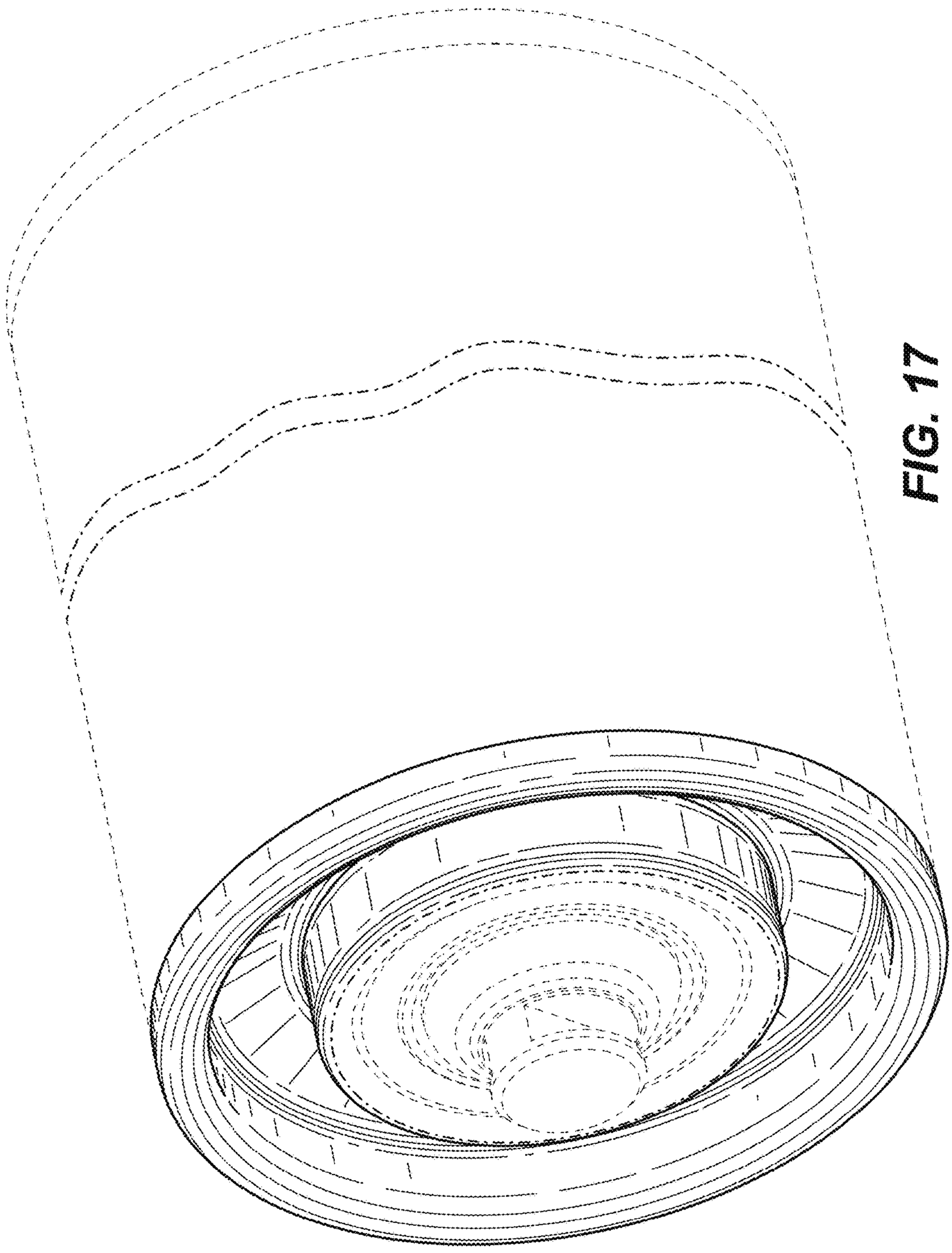

FIG. 17

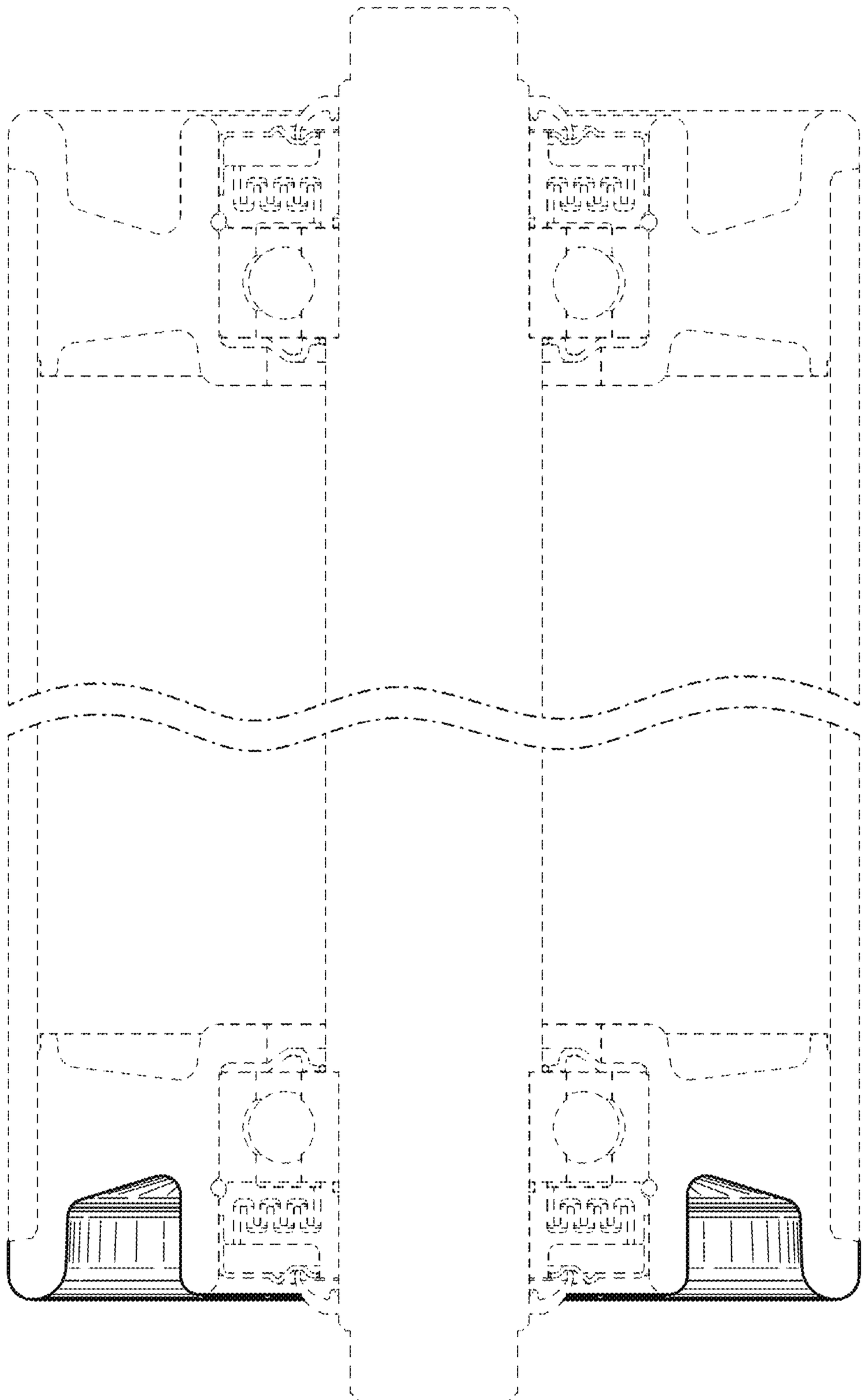

FIG. 18

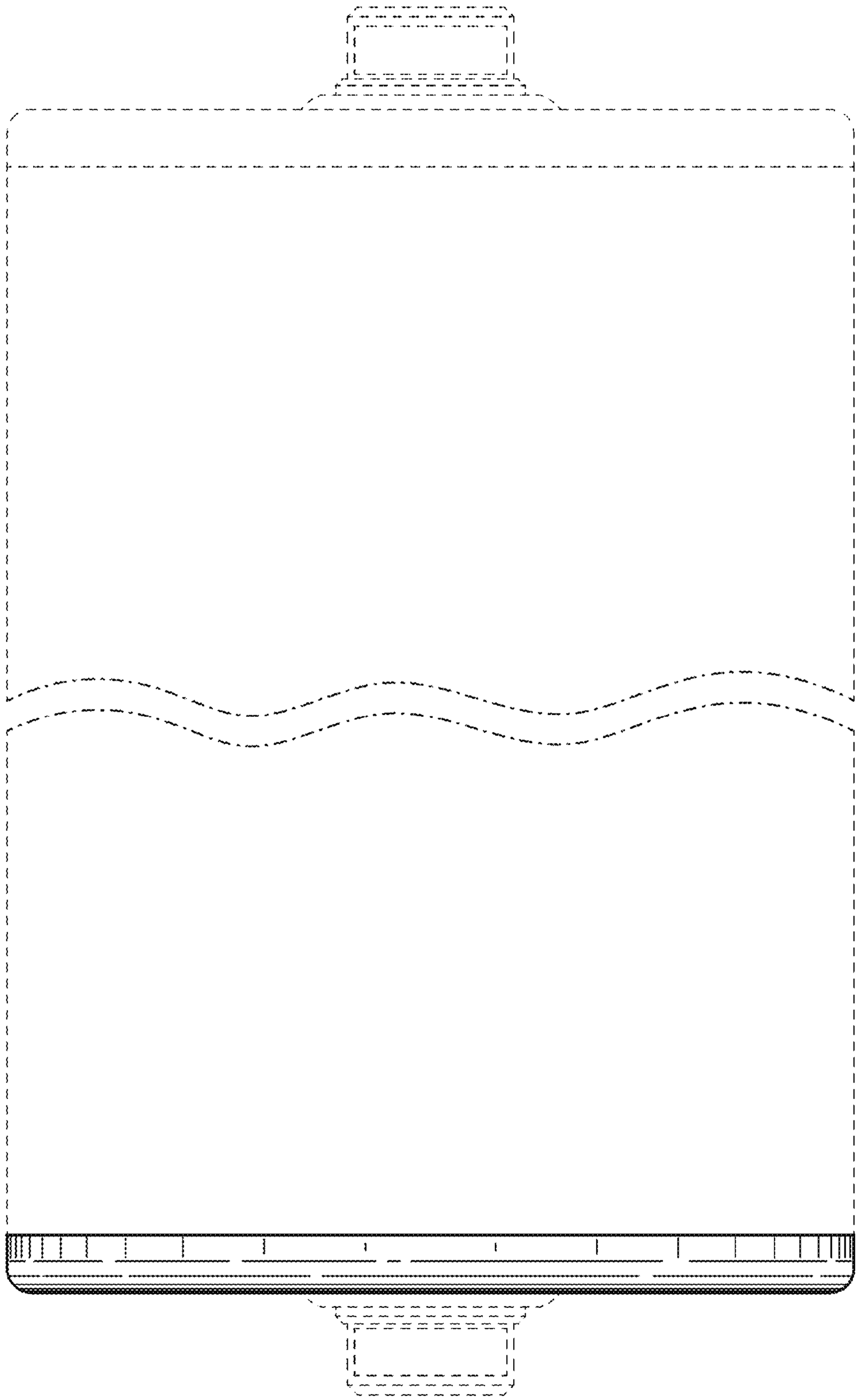

FIG. 19

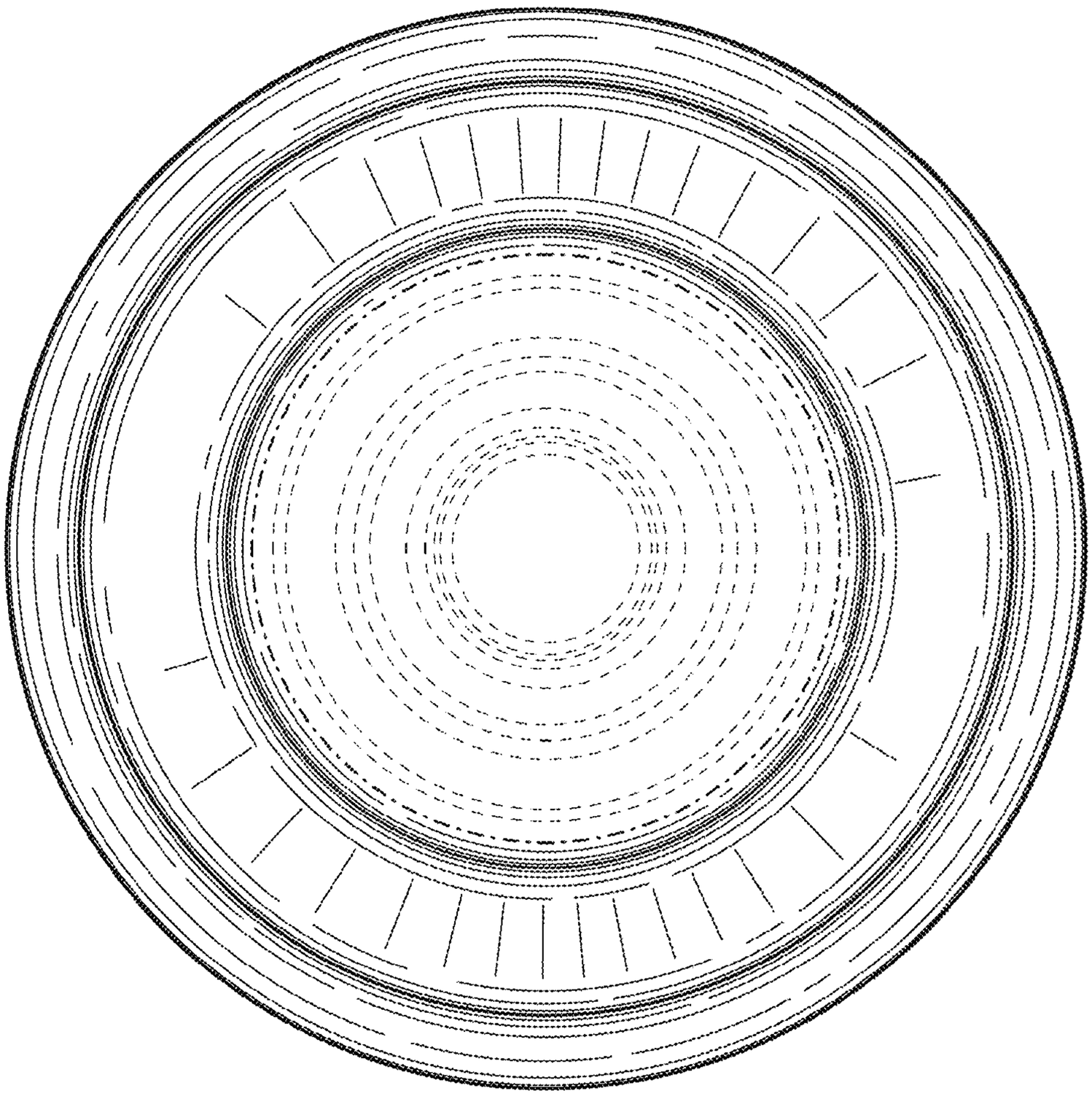

FIG. 20

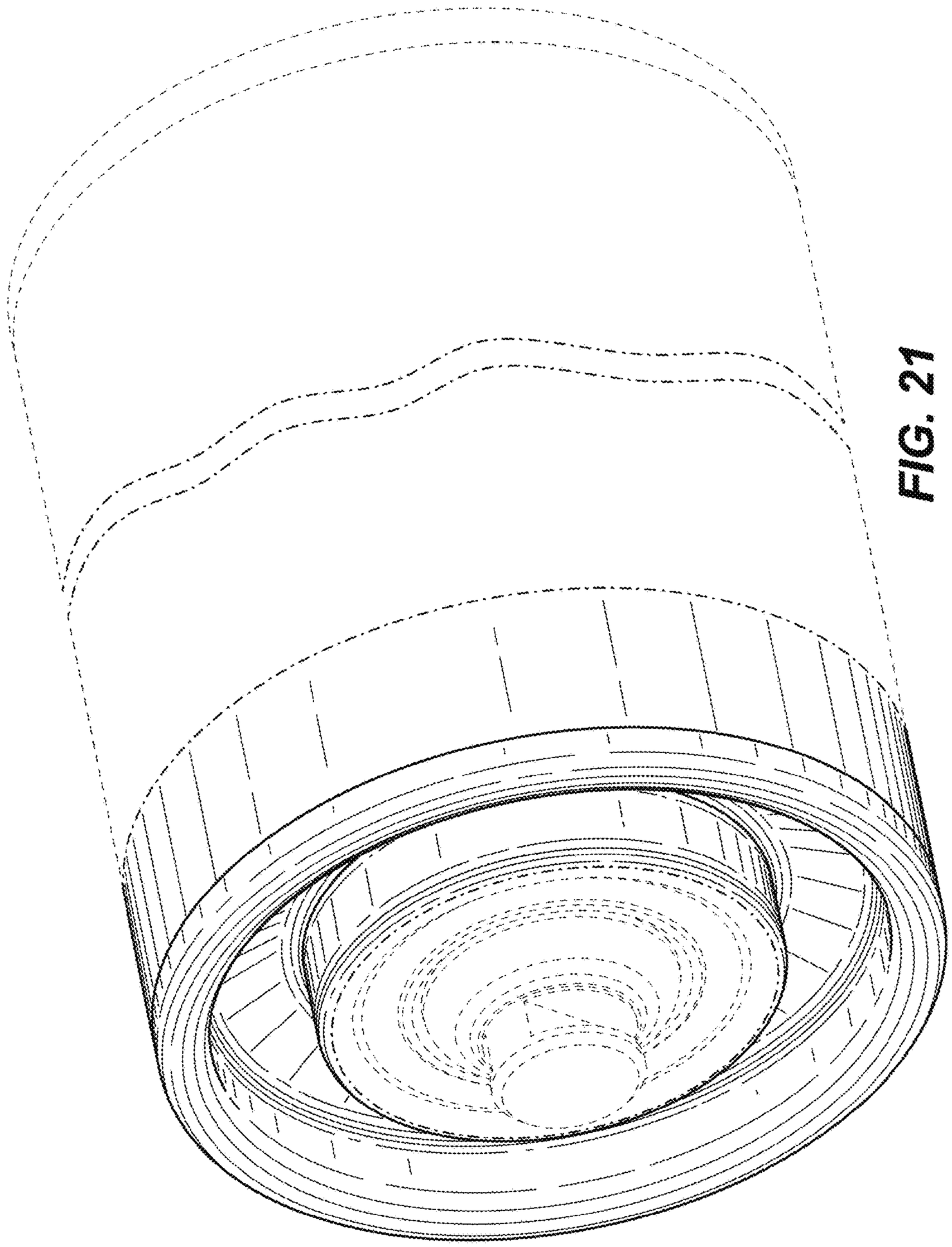

FIG. 21

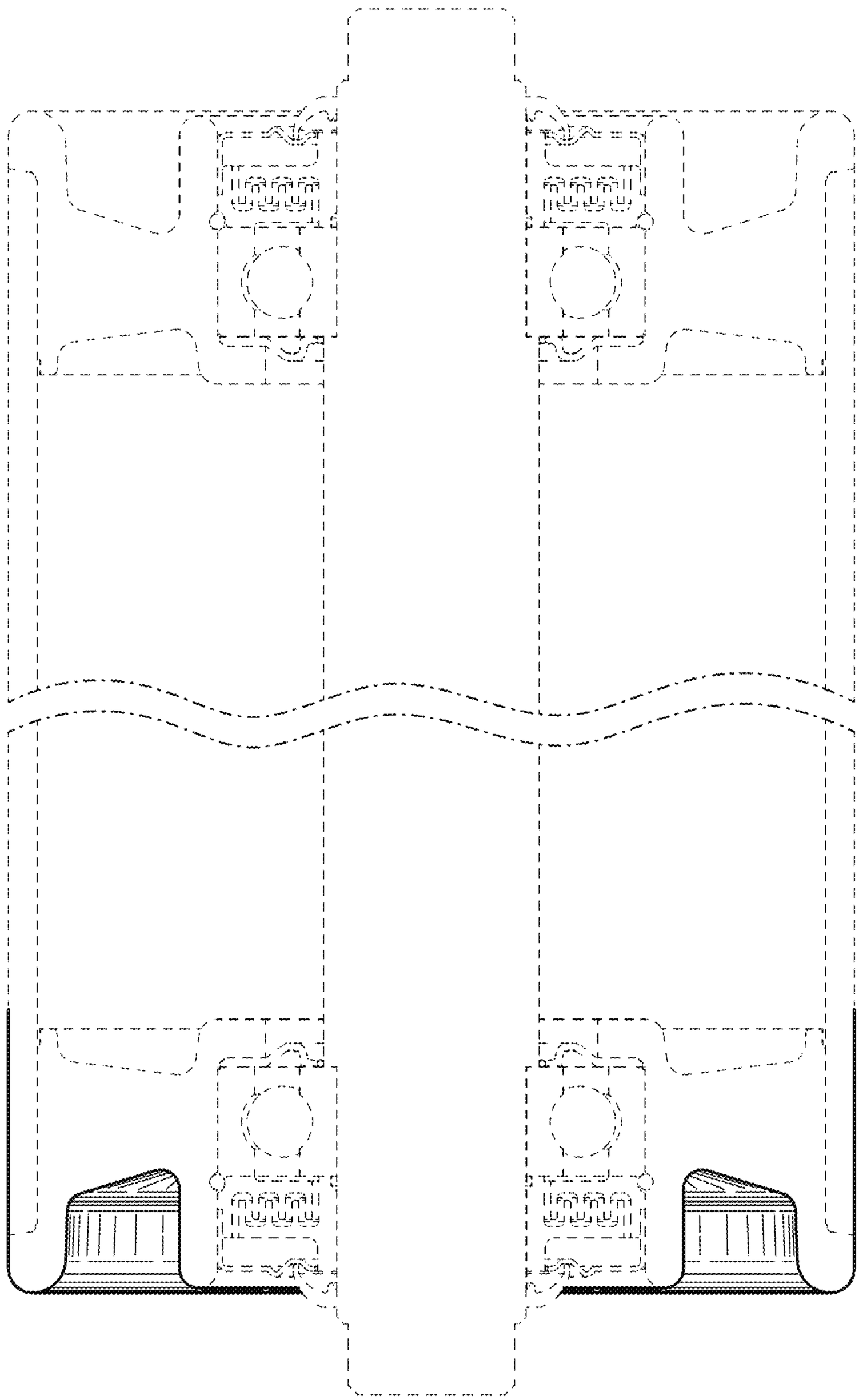

FIG. 22

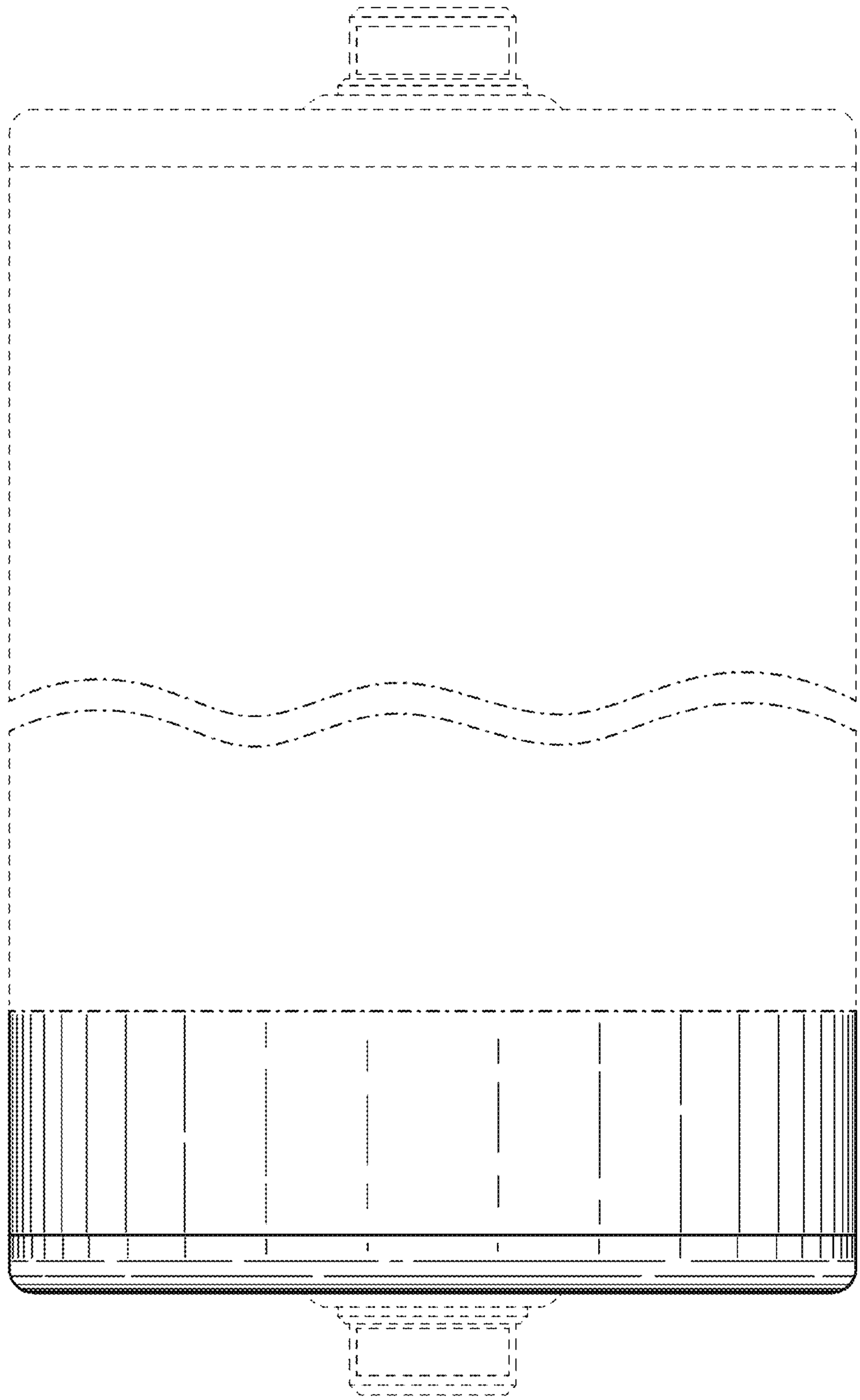

FIG. 23

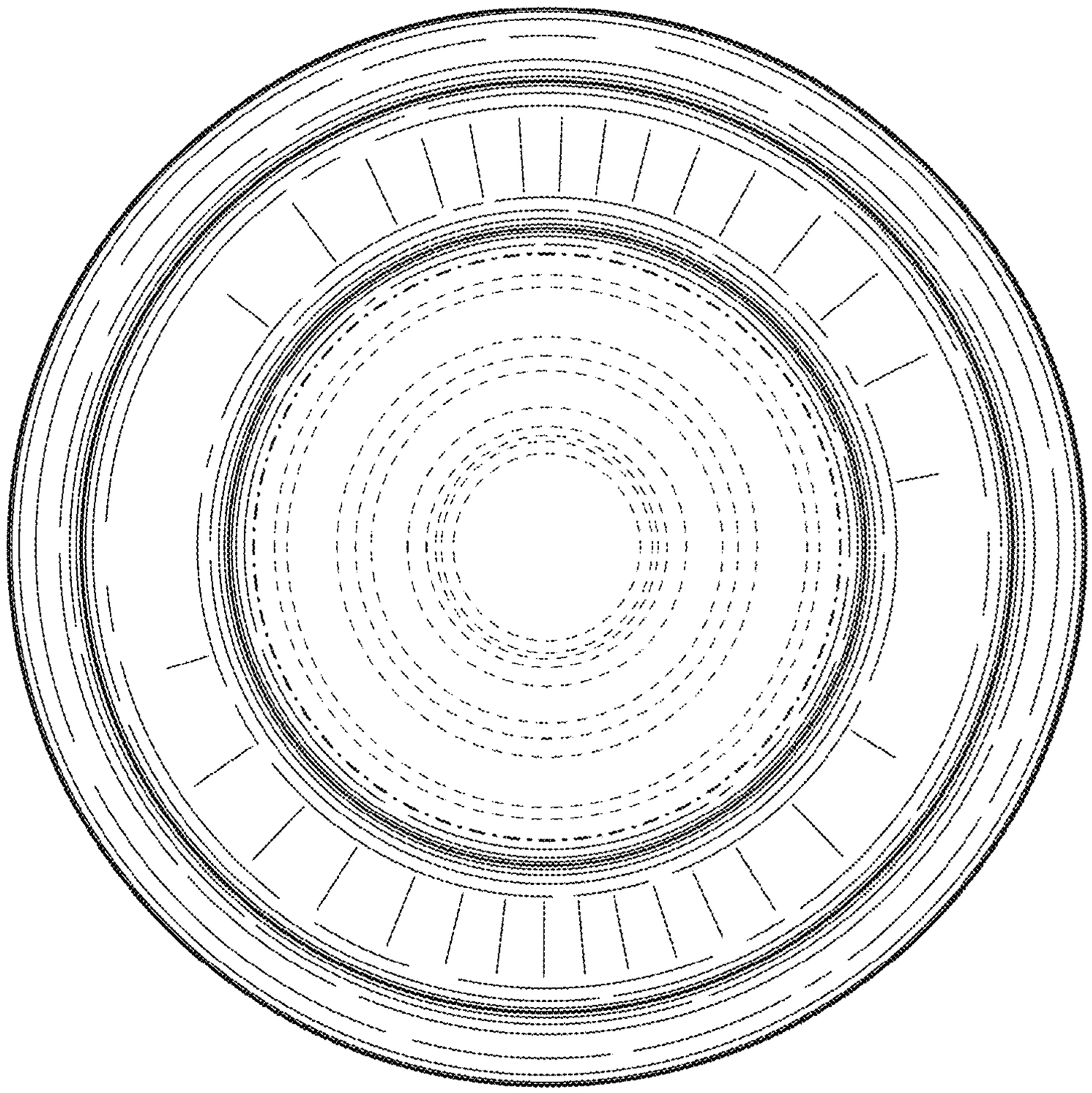

FIG. 24

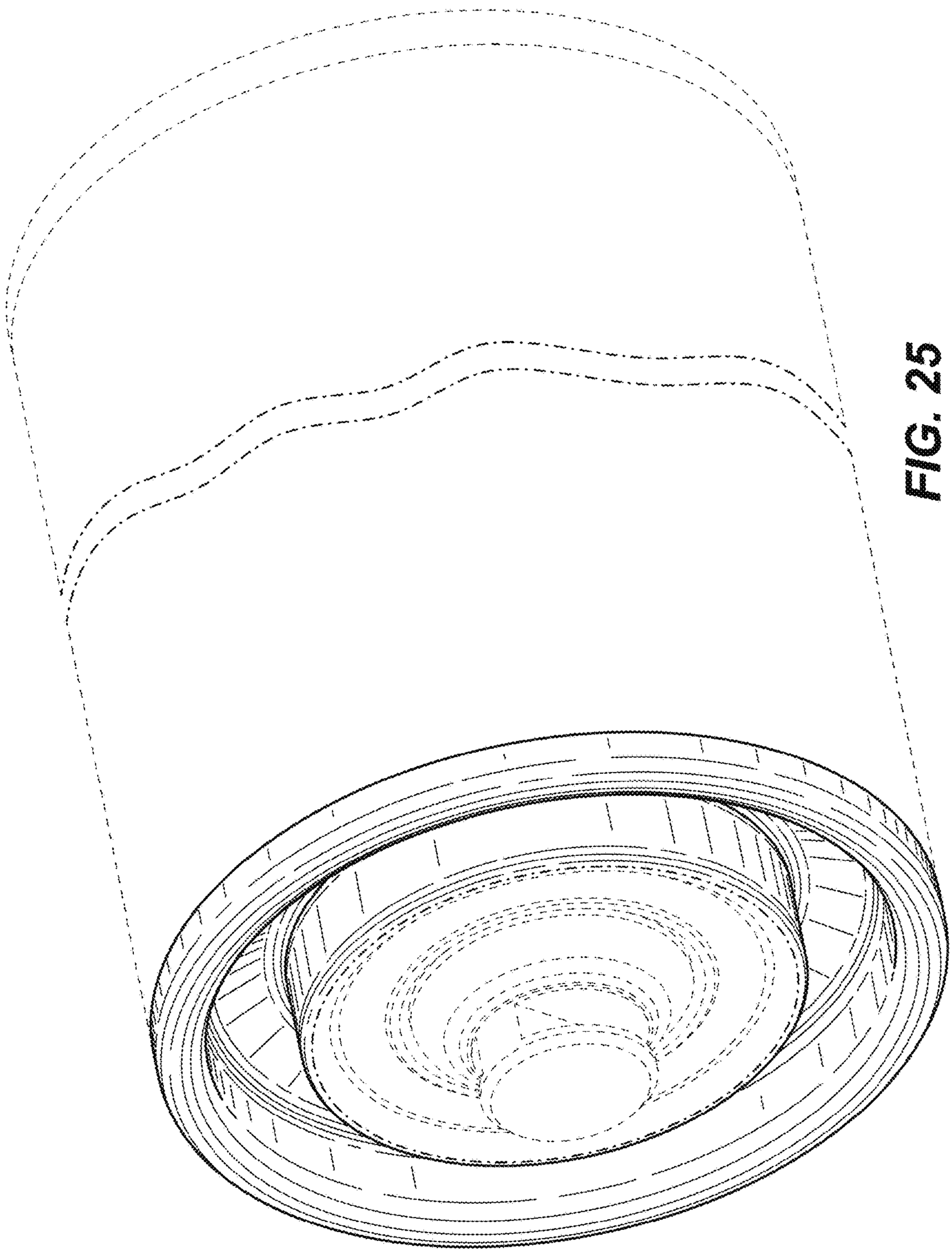

FIG. 25

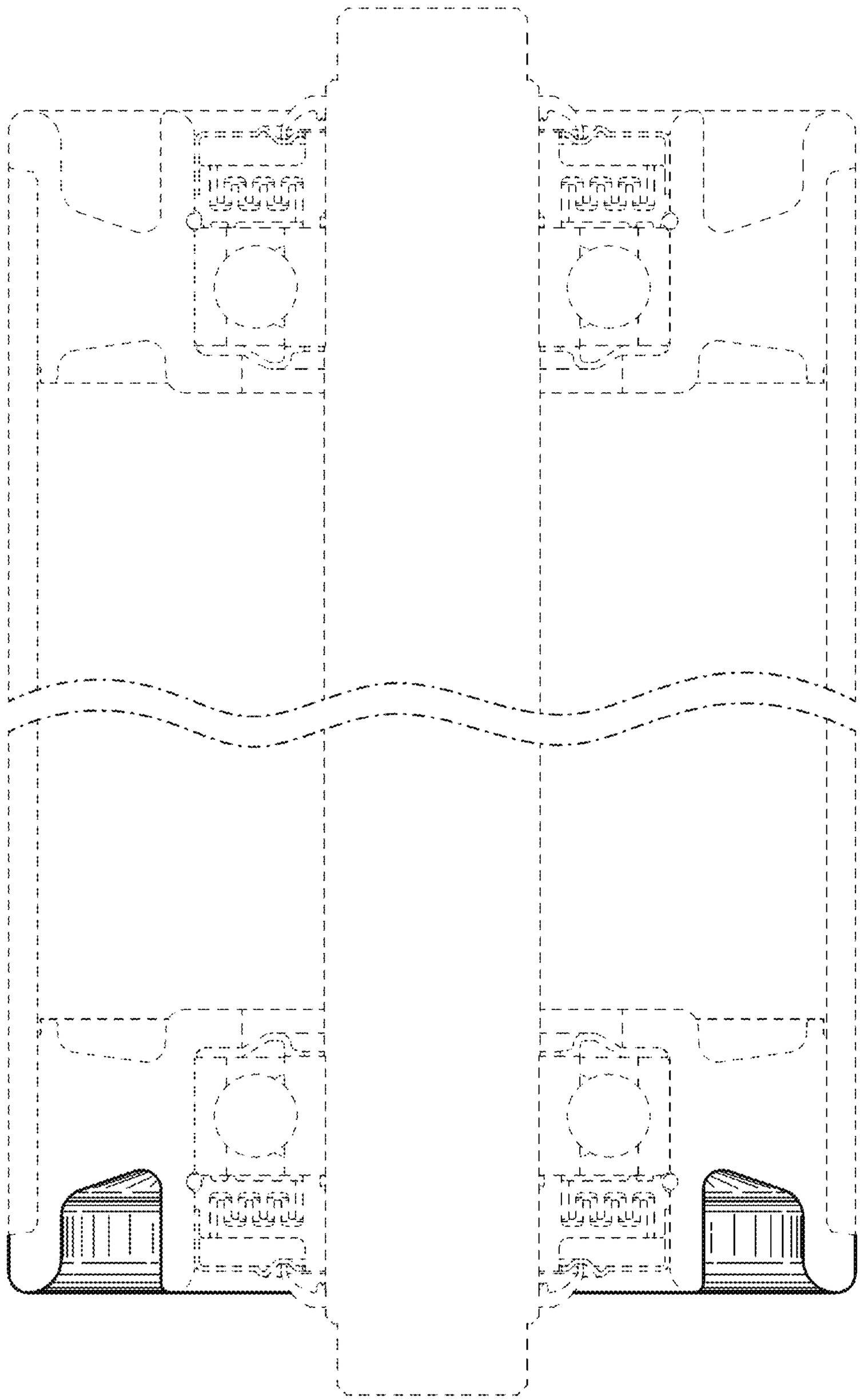

FIG. 26

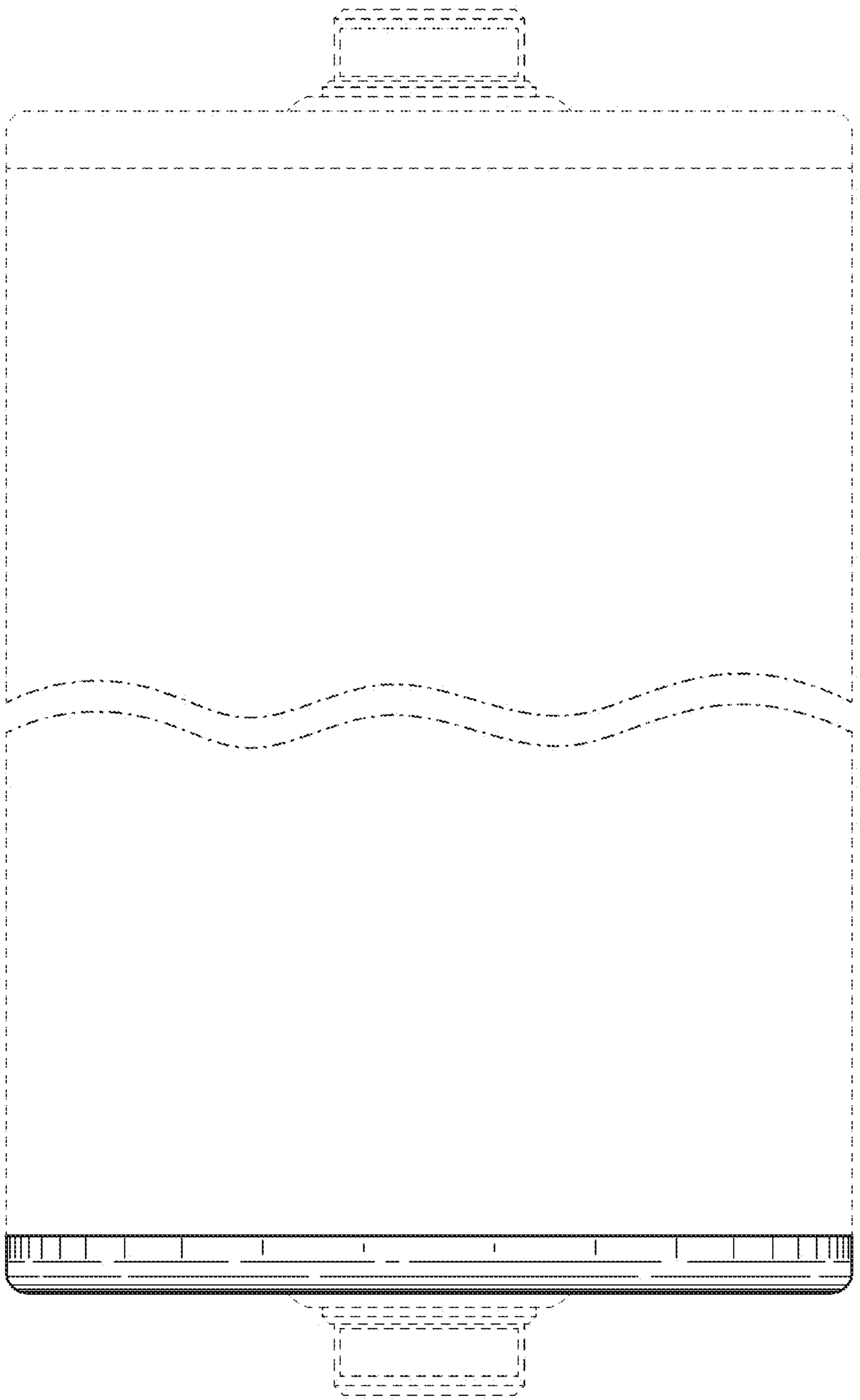

FIG. 27

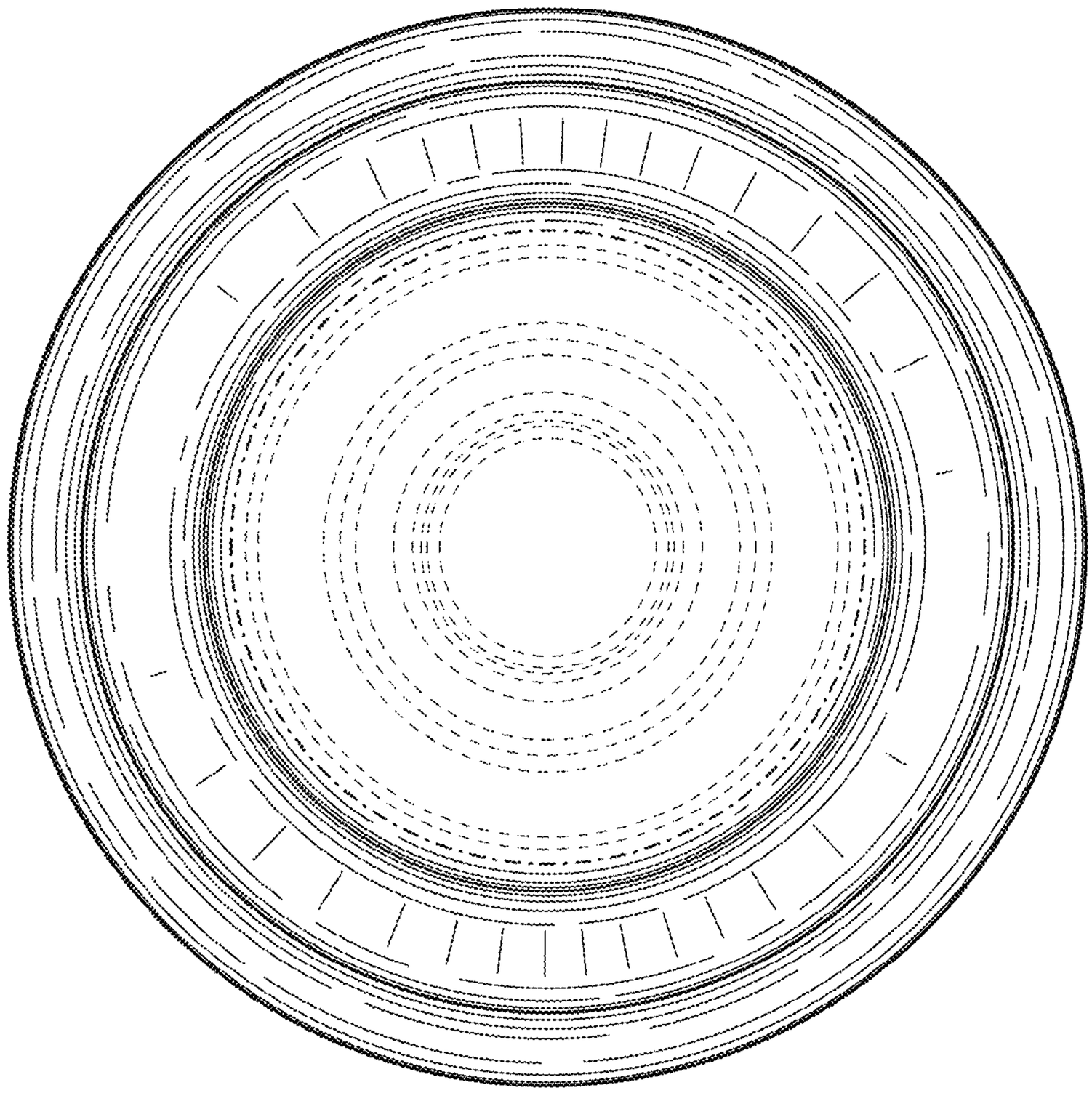

FIG. 28

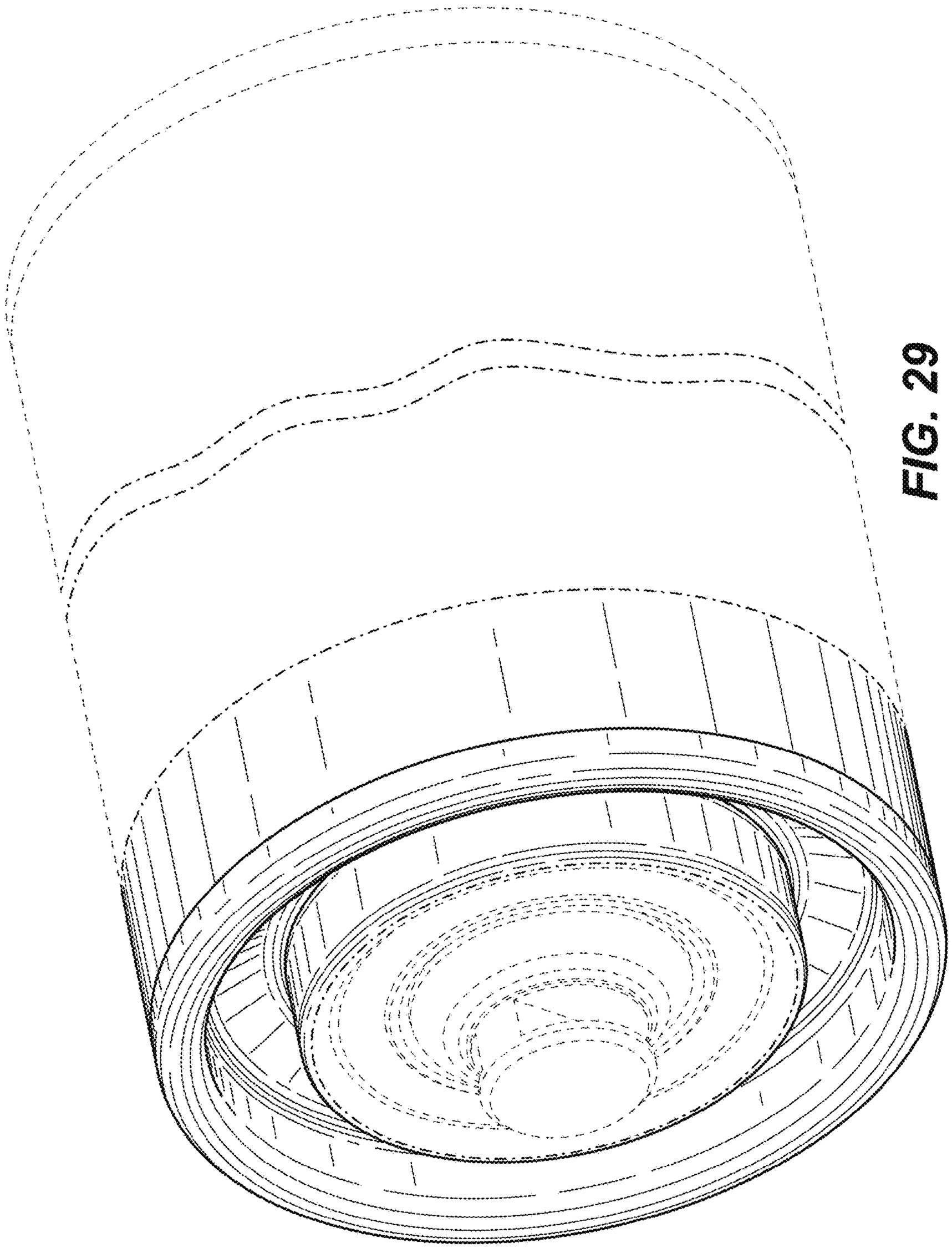

FIG. 29

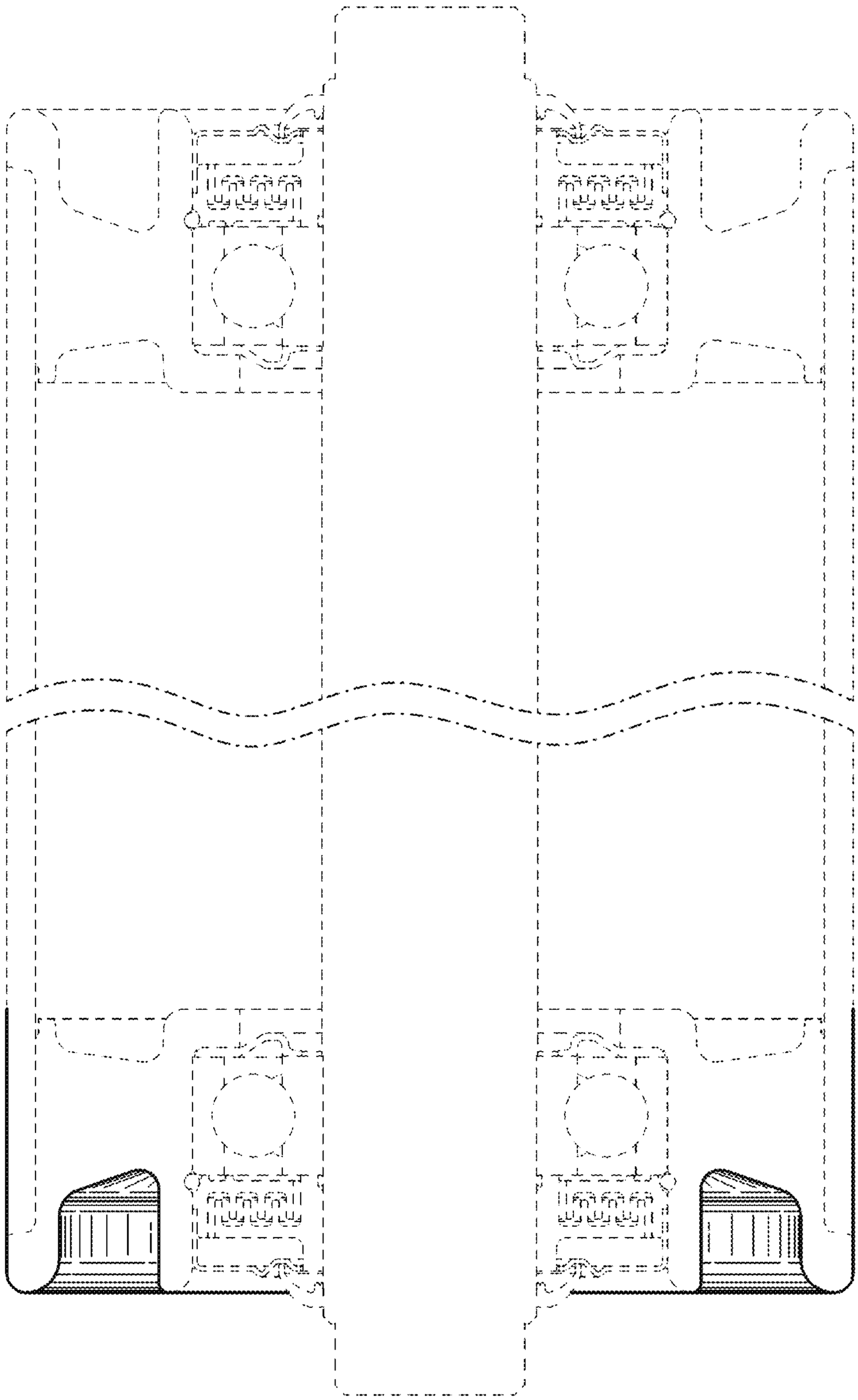

FIG. 30

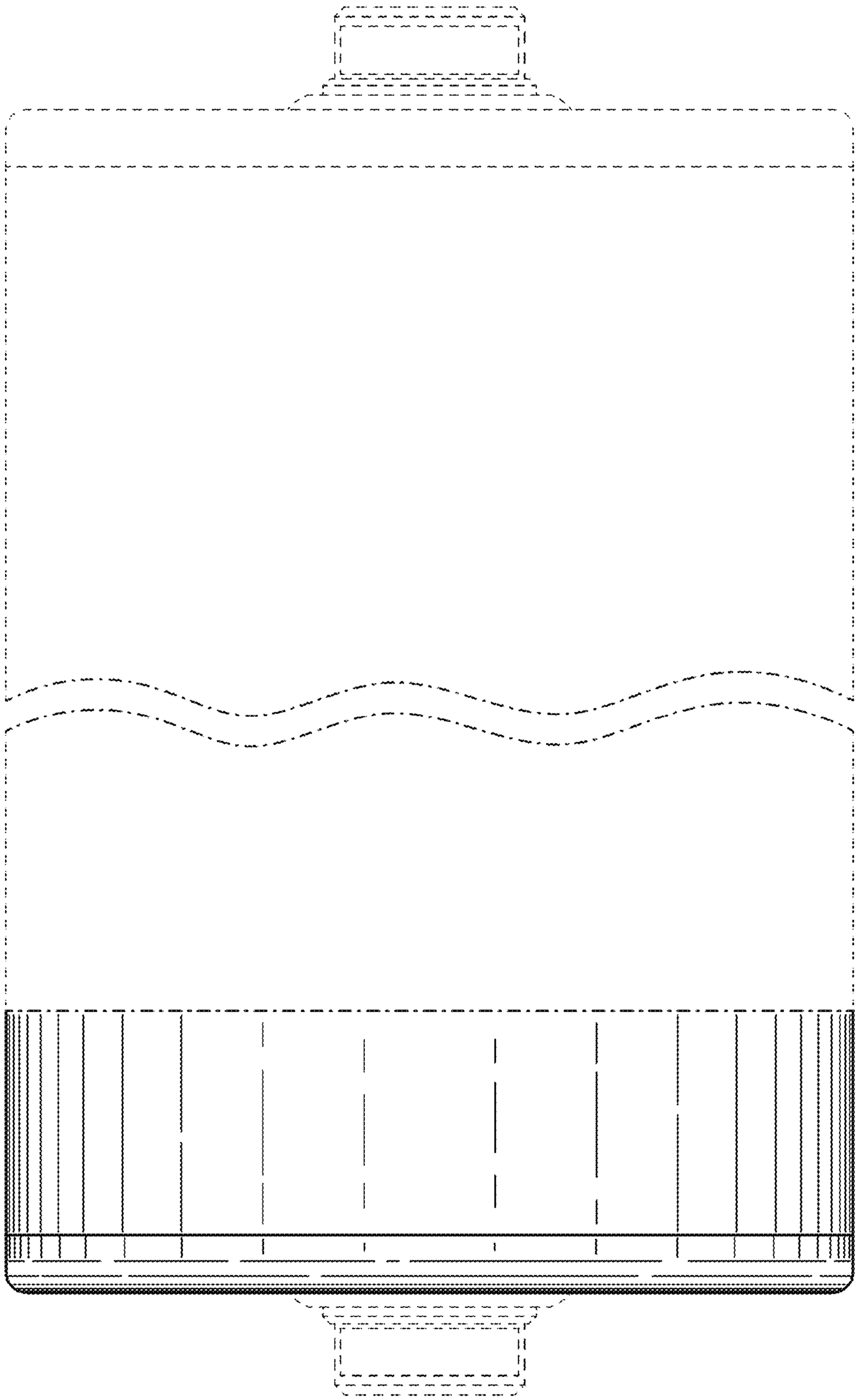

FIG. 31

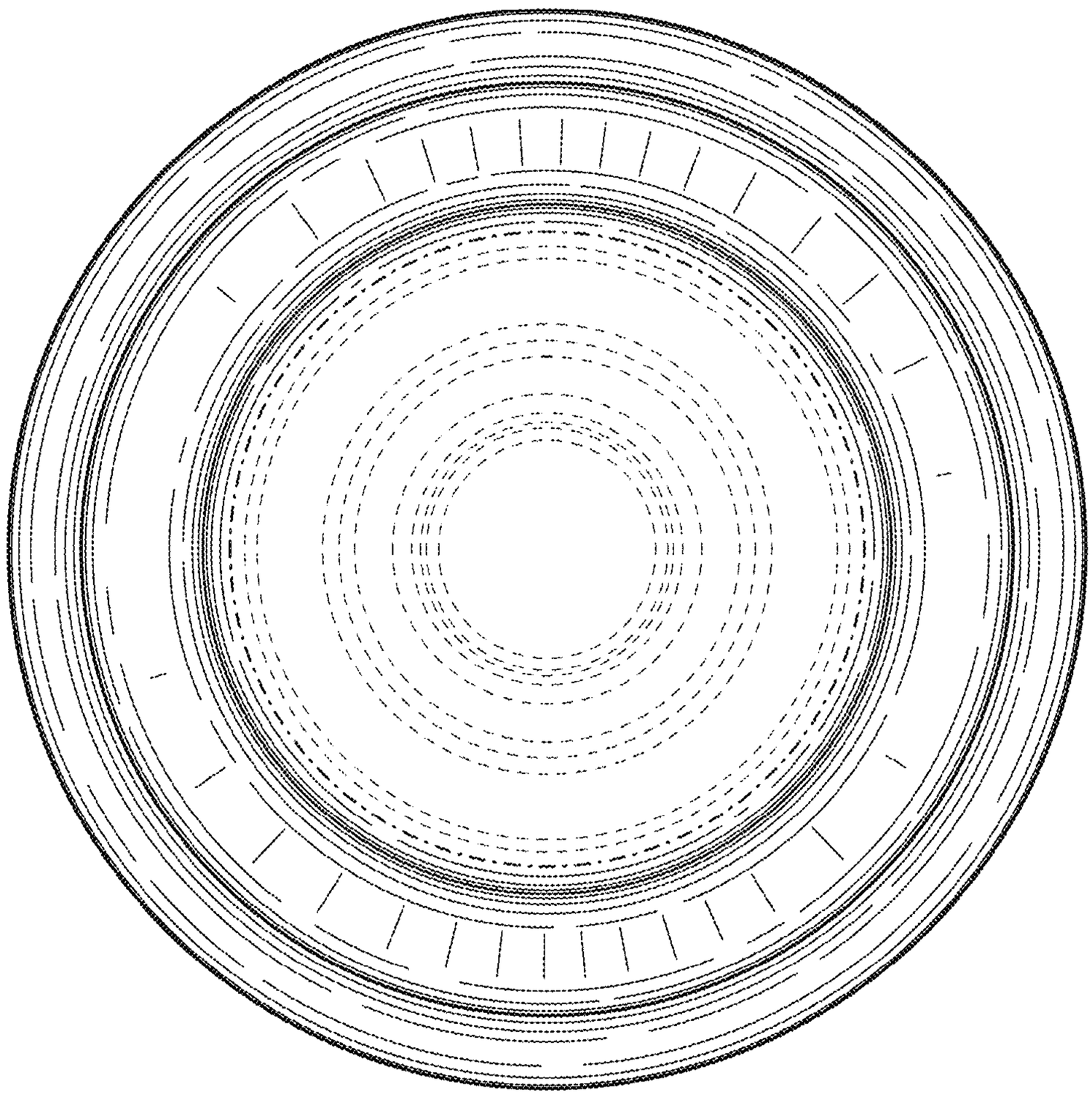

FIG. 32