US00D827612S

(12) United States Design Patent

Srour

(10) Patent No.: US D827,612 S
(45) Date of Patent: ** Sep. 4, 2018

(54) **PHONE ACCESSORY**

(71) Applicant: **Ikey Srour**, Brooklyn, NY (US)

(72) Inventor: **Ikey Srour**, Brooklyn, NY (US)

(**) Term: **15 Years**

(21) Appl. No.: **29/603,956**

(22) Filed: **May 15, 2017**

(51) **LOC (11) Cl.** **14-03**

(52) **U.S. Cl.**
USPC **D14/217**

(58) **Field of Classification Search**
USPC D14/217, 250, 251, 252, 253, 451, 452, D14/440, 434, 447, 458, 432, 439, 457, D14/460, 238.1, 140, 142, 149, 148; D9/434, 435, 454
CPC .. H04M 1/04; H04M 1/6075; H04M 1/72569; H04M 1/72577; H04M 17/026; H04M 1/006; H04M 1/0214; H04M 1/0233; H04M 1/0254; H04M 1/0264; H04M 1/0279; H04M 1/18; H04M 1/6091; H04M 1/723; H04M 1/725; H04M 2207/206; H04M 2250/16; H04M 1/15; H04B 1/3888
See application file for complete search history.

(56) **References Cited**

U.S. PATENT DOCUMENTS

D327,808 S * 7/1992 Kline D7/391
D352,896 S * 11/1994 Jones D9/503
D512,914 S * 12/2005 Moretti D9/454
D536,614 S * 2/2007 Peterson D9/454
D633,644 S * 3/2011 Sprengers D26/89
8,186,642 B2 * 5/2012 Weiss-Vons B65H 75/143 248/205.5
8,560,031 B2 * 10/2013 Barnett F16M 11/10 455/575.8
D693,818 S * 11/2013 Webber D14/439
D694,463 S * 11/2013 Sieczkowski D26/124
8,737,066 B1 * 5/2014 Block A45F 5/00 224/217
D714,126 S * 9/2014 Pyon D8/349
D756,222 S * 5/2016 Lopez D23/260
D766,228 S * 9/2016 Haymond D14/252
D769,859 S * 10/2016 Herbst D14/253
9,486,910 B2 * 11/2016 Stevens F16M 11/041
D774,887 S * 12/2016 Torrison D9/416
D776,529 S * 1/2017 Torrison D9/435
D781,832 S * 3/2017 Snitko D14/250
D784,811 S * 4/2017 Scevola D7/387
D792,220 S * 7/2017 Simons D7/396.2
D794,456 S * 8/2017 Rockwell D9/434
D794,607 S * 8/2017 Srour D14/217
D801,176 S * 10/2017 Lynd D9/454
9,787,348 B2 * 10/2017 Srour H04B 1/3888
D804,306 S * 12/2017 Simons D9/454
D807,746 S * 1/2018 Fleming D9/454
9,970,589 B2 * 5/2018 Hobbs F16M 11/06
2012/0042476 A1 * 2/2012 Karmatz B25G 1/102 16/421

(Continued)

Primary Examiner — Ian Simmons
Assistant Examiner — Khawaja Anwar
(74) *Attorney, Agent, or Firm* — Michael J. Feigin, Esq.; Feigin and Fridman LLC

(57) **CLAIM**

The ornamental design for a phone accessory, as shown and described.

DESCRIPTION

FIG. **1** shows a top and side perspective view of a phone accessory.
FIG. **2** shows a bottom and reverse side perspective view thereof.
FIG. **3** shows a elevation view thereof.
FIG. **4** shows a reverse side elevation view thereof.
FIG. **5** shows a bottom plan view thereof; and,
FIG. **6** shows a top plan view thereof.

1 Claim, 5 Drawing Sheets

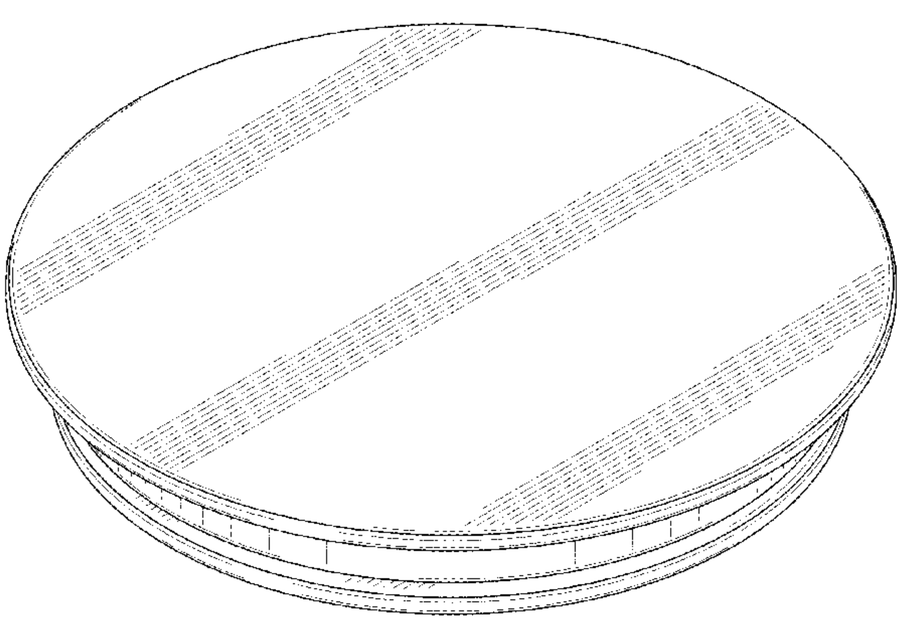

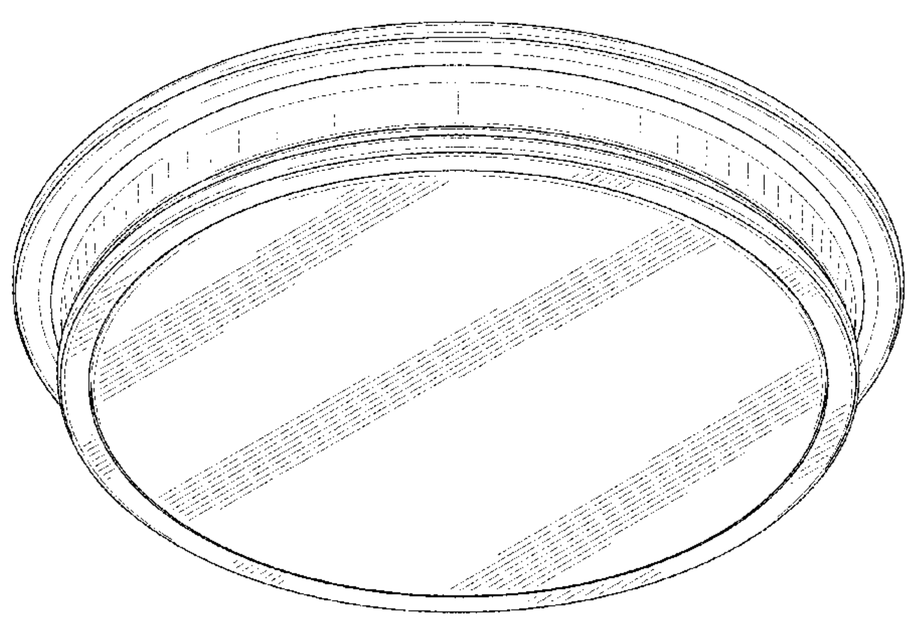

(56) **References Cited**

U.S. PATENT DOCUMENTS

2012/0104185 A1* 5/2012 Carroll F16M 11/041
248/27.1

* cited by examiner

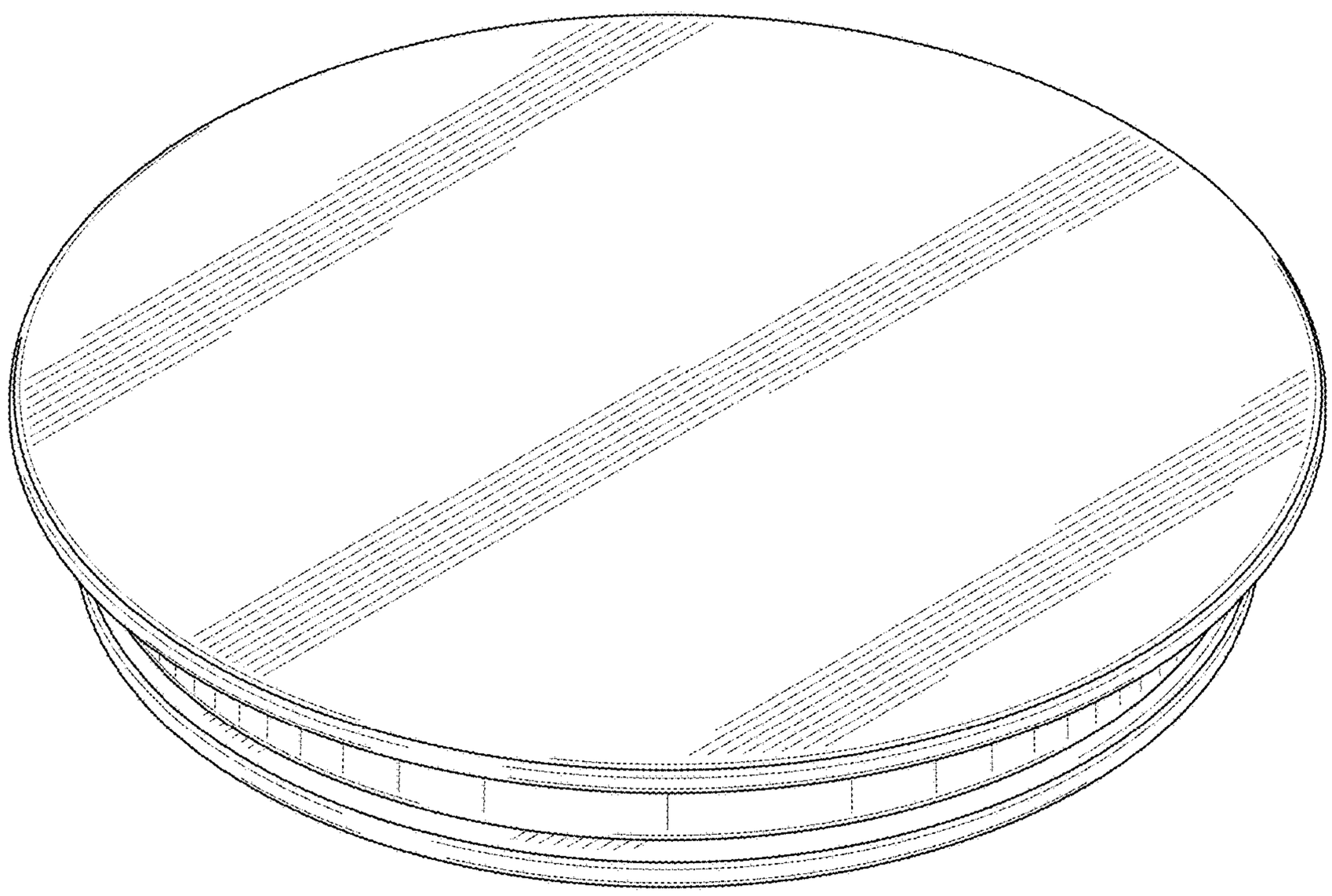

FIG. 1

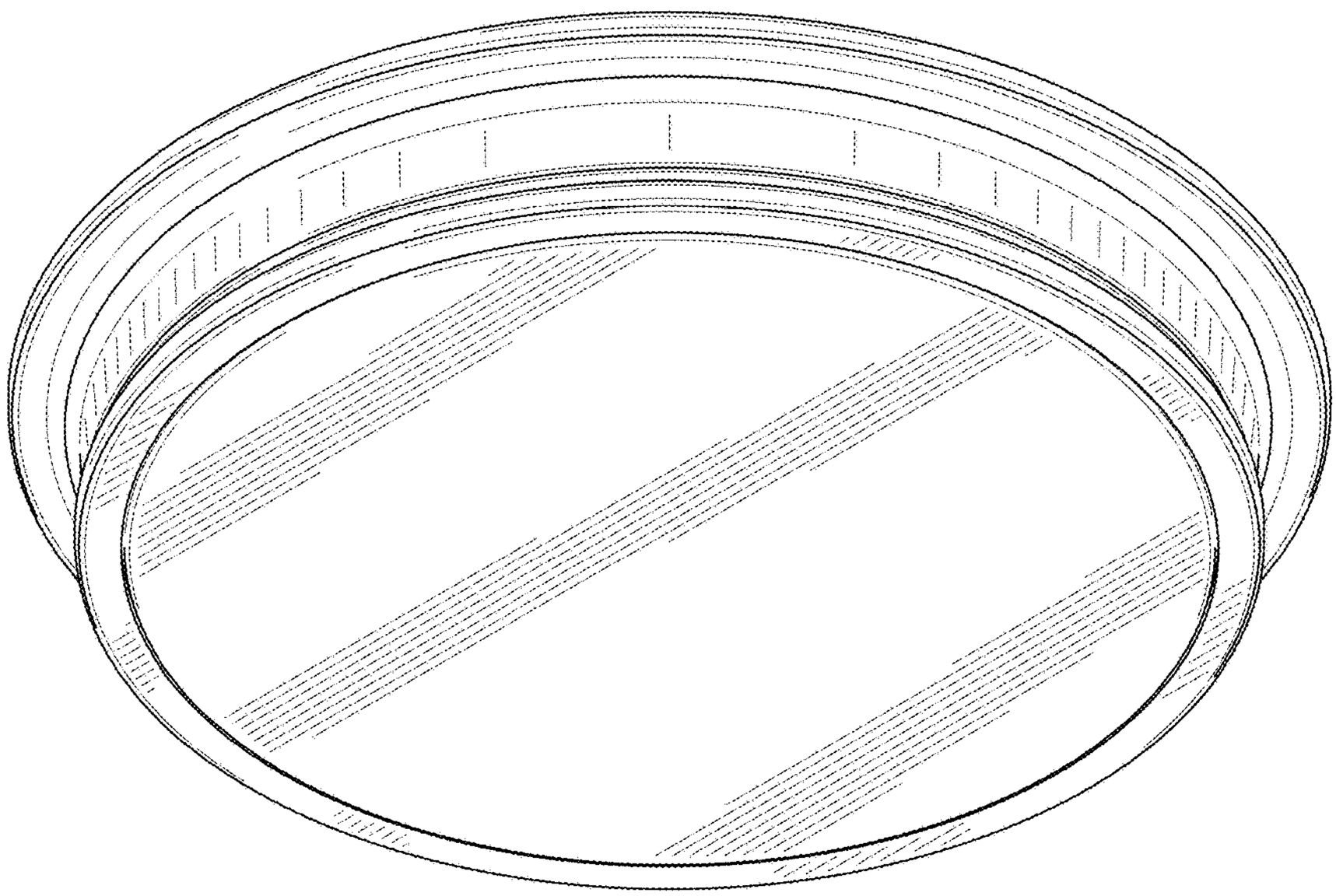

FIG. 2

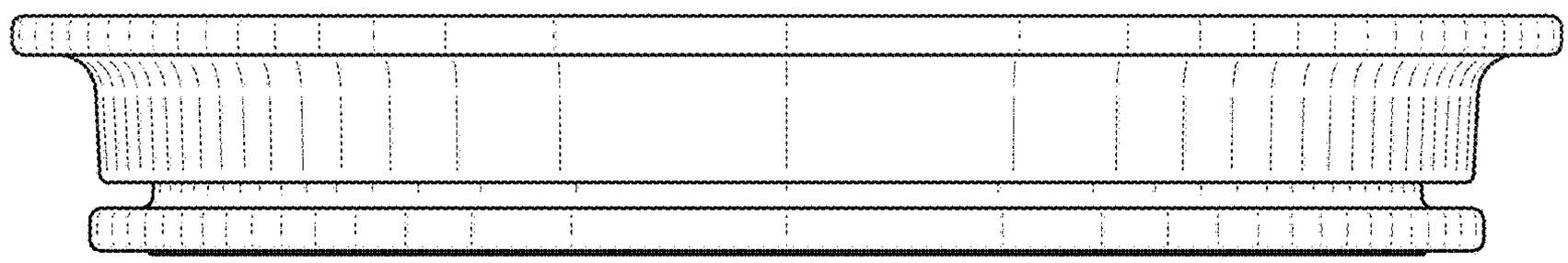

FIG. 3

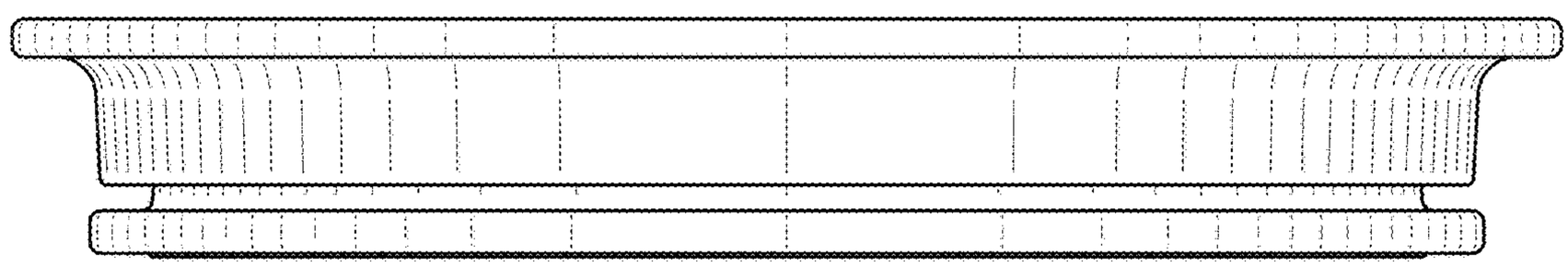

FIG. 4

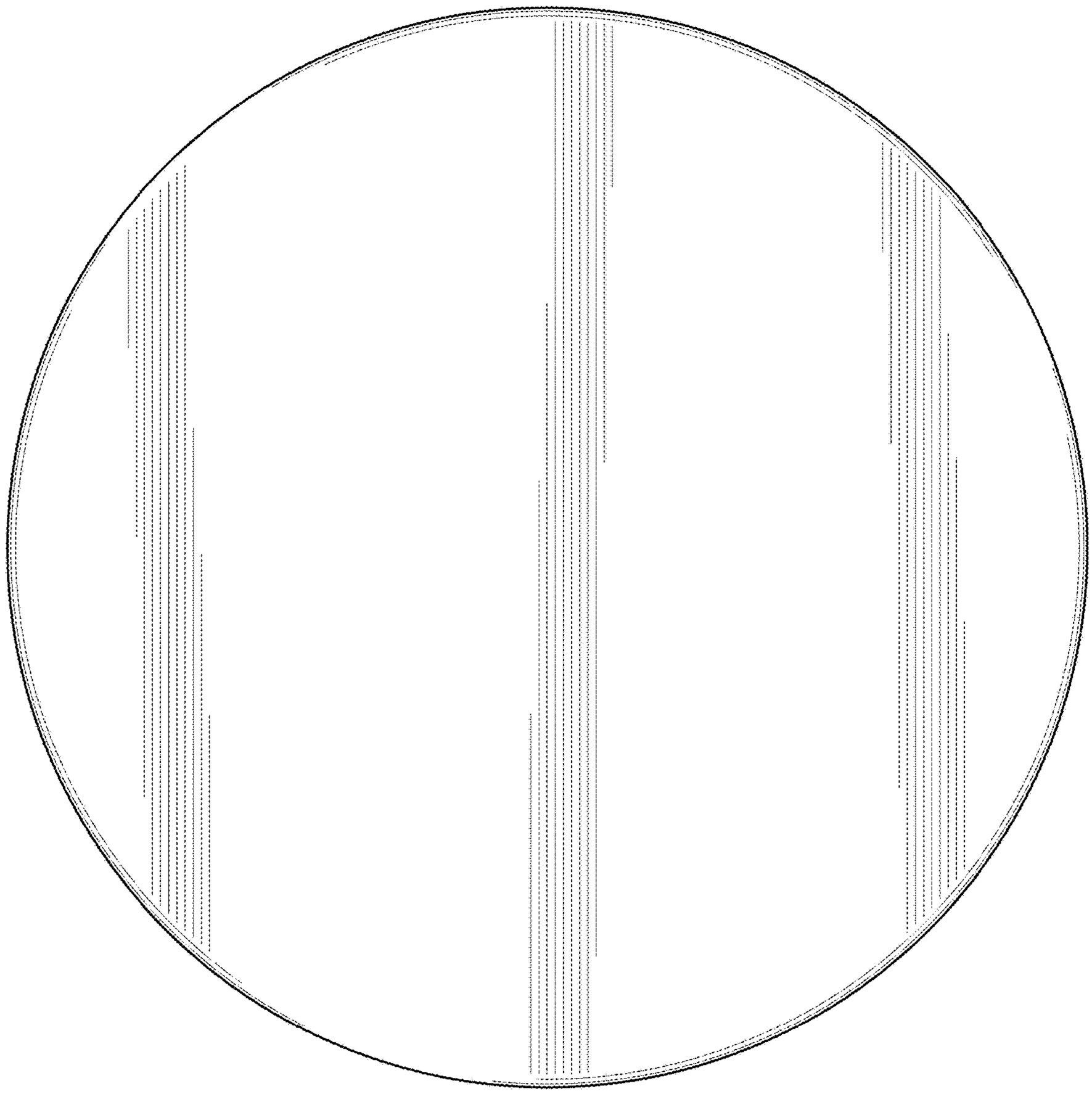

FIG. 5

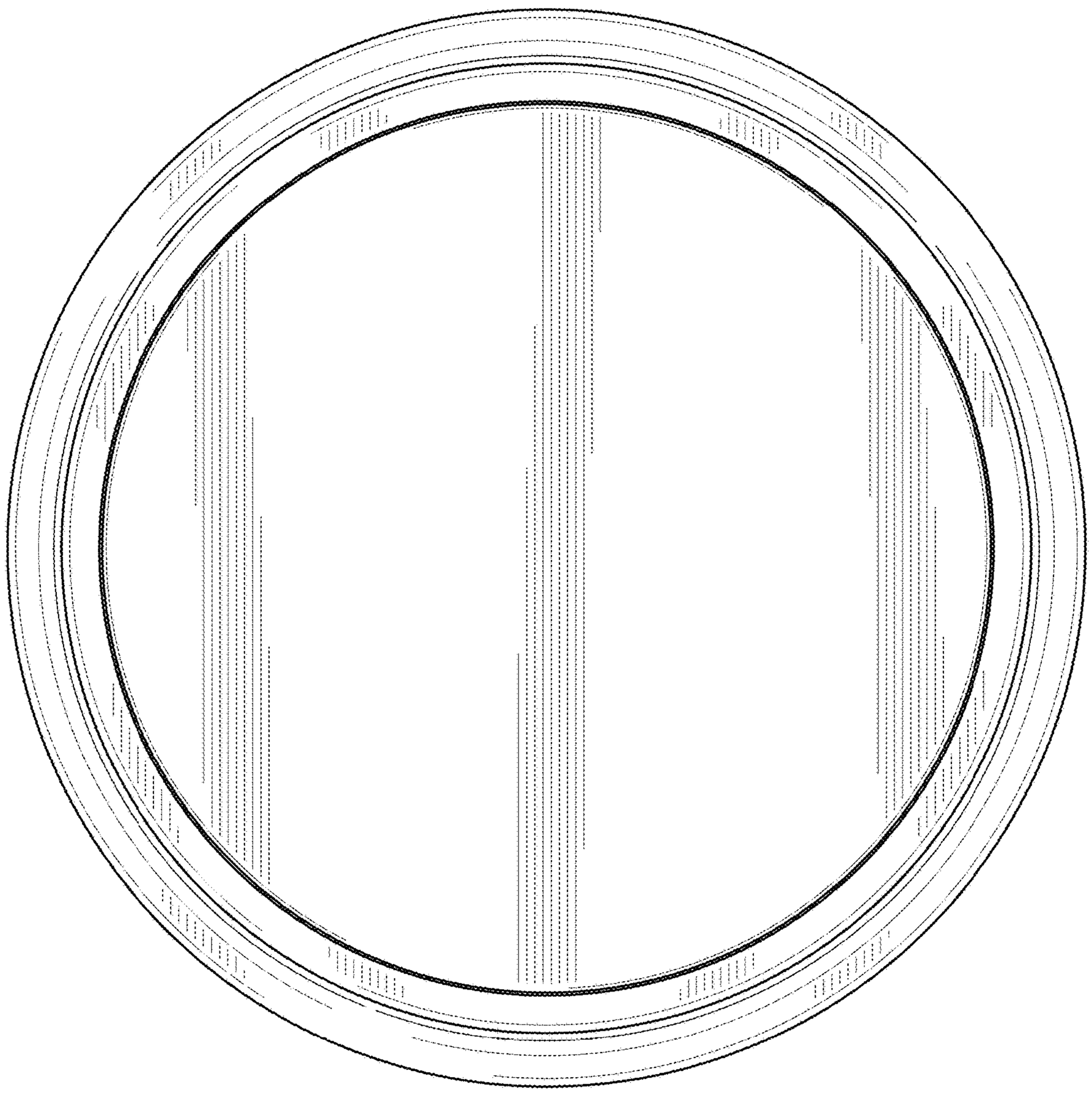

FIG. 6