US00D825772S

(12) United States Design Patent

Sever et al.

(10) Patent No.: US D825,772 S
(45) Date of Patent: ** Aug. 14, 2018

(54) **SAMPLE COLLECTION DEVICE OF AN ANALYTE DETECTION SYSTEM**

(71) Applicant: **CUE INC.**, San Diego, CA (US)

(72) Inventors: **Clinton Sever**, San Diego, CA (US); **Paul Nelson**, San Diego, CA (US); **Ayub Khattak**, San Diego, CA (US)

(73) Assignee: **CUE HEALTH INC.**, San Diego, CA (US)

(**) Term: **15 Years**

(21) Appl. No.: **29/591,165**

(22) Filed: **Jan. 17, 2017**

Related U.S. Application Data

(63) Continuation of application No. 29/584,030, filed on Nov. 10, 2016, which is a continuation of application No. PCT/US2016/042688, filed on Jul. 16, 2016.

(51) **LOC (11) Cl.** **24-01**

(52) **U.S. Cl.**
USPC **D24/216**

(58) **Field of Classification Search**
USPC D24/216–232, 107, 108, 119, 121, 162, D24/169, 186, 201, 233, 234; D10/81; 422/553; 435/297.5, 305.3
CPC G01N 2035/00306; G01N 2035/00326; G01N 2035/00336; G01N 2035/00029; G01N 2035/0401; G01N 2035/0403; G01N 2035/0405; G01N 2035/00019; G01N 2030/027; G01N 35/08; G01N 35/02; G01N 35/021; G01N 35/026; G01N 35/028; G01N 35/04; G01N 1/22; G01N 1/2205; G01N 1/2273; G01N 33/497; G01N 33/4977;
(Continued)

(56) **References Cited**

U.S. PATENT DOCUMENTS

D115,326 S * 6/1939 Chott D24/149
D249,062 S * 8/1978 Crafoord 433/141
(Continued)

FOREIGN PATENT DOCUMENTS

EP 1183102 B2 12/2003
JP 2009-226404 A 10/2009
(Continued)

OTHER PUBLICATIONS

U.S. Notice of Allowance on U.S. Appl. No. 15/336,739 dated Feb. 26, 2018.
(Continued)

Primary Examiner — Anhdao Doan
Assistant Examiner — Mary Shannon Malley
(74) *Attorney, Agent, or Firm* — Foley & Lardner LLP; Antoinette F. Konski; Marshall J. Brown

(57) **CLAIM**

We claim the ornamental design for a sample collection device of an analyte detection system, as shown and described.

DESCRIPTION

FIG. **1** is a top, front, right side perspective view of a sample collection device of an analyte detection system according to an exemplary embodiment;
FIG. **2** is a right side elevation view thereof;
FIG. **3** is a left side elevation view thereof;
FIG. **4** is a top plan view thereof;
FIG. **5** is a bottom plan view thereof;
FIG. **6** is a front elevation view thereof; and,
FIG. **7** is a rear elevation view thereof.
The dash-dash broken lines represent portions of the sample collection device of an analyte detection system that form no part of the claimed design. The dash-dot lines define the boundaries of the claimed design.

1 Claim, 4 Drawing Sheets

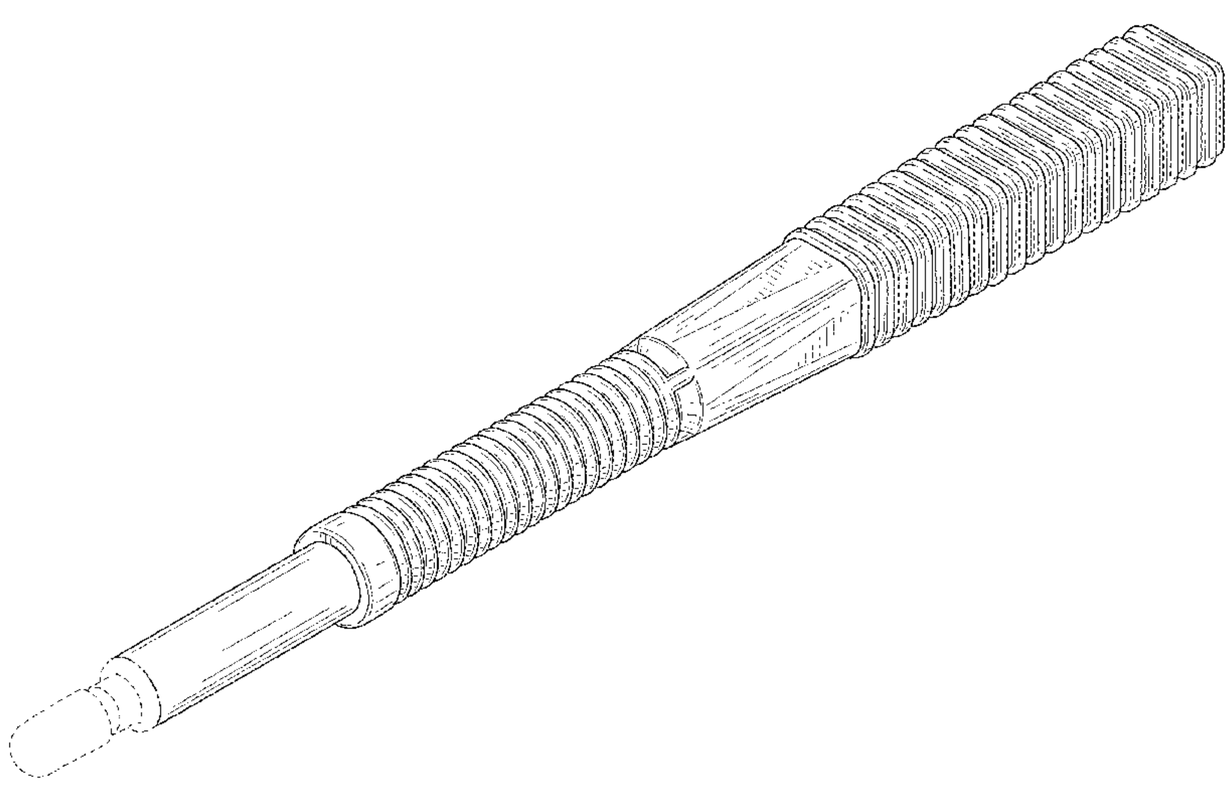

(58) **Field of Classification Search**
CPC B01L 2300/0809; B01L 2300/0816; B01L 2300/0822; B01L 2300/0832; B01L 2300/0806; B01L 2300/0861; B01L 2300/0829; B01L 3/5085; B01L 3/50853
See application file for complete search history.

(56) **References Cited**

U.S. PATENT DOCUMENTS

D303,288	S *	9/1989	Harboe	D24/111
D306,067	S *	2/1990	Bogdanoff	D24/149
D343,679	S *	1/1994	Wong	D24/119
5,498,392	A	3/1996	Wilding et al.	
D379,230	S *	5/1997	Mark	D24/152
D402,753	S *	12/1998	White	D24/108
6,146,590	A *	11/2000	Mazurek	G01N 33/54386 422/401
D458,456	S *	6/2002	Dragan	D24/119
6,514,415	B2	2/2003	Hatch et al.	
D518,597	S *	4/2006	Sommers	D24/119
7,723,099	B2	5/2010	Miller et al.	
D698,036	S *	1/2014	Dickinson	D24/223
8,724,833	B1	5/2014	Shain et al.	
8,802,445	B2	8/2014	Linder et al.	
8,883,518	B2	11/2014	Roy et al.	
9,028,773	B2	5/2015	Ganesan	
9,176,126	B2	11/2015	Holmes et al.	
9,310,231	B2	4/2016	Bloss et al.	
9,435,793	B2	9/2016	Burd et al.	
9,636,676	B2 *	5/2017	Sever	B01L 3/502738
9,718,058	B2 *	8/2017	Khattak	B01L 3/508
9,724,691	B2 *	8/2017	Khattak	B01L 3/508
2002/0123048	A1	9/2002	Gau, Jr.	
2004/0082878	A1	4/2004	Baldwin et al.	
2004/0214200	A1 *	10/2004	Brown	B01L 3/5029 435/6.18
2005/0171528	A1	8/2005	Sartor et al.	
2005/0200643	A1	9/2005	Falcon	
2006/0160205	A1	7/2006	Blackburn et al.	
2007/0060815	A1	3/2007	Martin et al.	
2007/0299364	A1 *	12/2007	Sangha	A61F 13/38 600/572
2009/0130777	A1	5/2009	Arinaga et al.	
2010/0274155	A1	10/2010	Battrell et al.	
2010/0280146	A1	11/2010	Vanderlaan et al.	
2011/0212440	A1	9/2011	Viovy et al.	
2011/0233073	A1	9/2011	Laczka et al.	
2011/0272294	A1	11/2011	Fujiwara	
2012/0014836	A1	1/2012	Dittmer	
2012/0095316	A1	4/2012	Lewis et al.	
2012/0255860	A1	10/2012	Briman et al.	
2013/0145591	A1 *	6/2013	Chen	B25B 27/06 29/256
2014/0242622	A1	8/2014	Petrich et al.	
2017/0043336	A1 *	2/2017	Khattak	B01L 3/5027
2017/0045508	A1 *	2/2017	Khattak	G01N 33/54366
2017/0080421	A1	3/2017	Khattak et al.	
2017/0216842	A1	8/2017	Khattak et al.	
2017/0241845	A1 *	8/2017	Hwang	F16C 29/00
2017/0248622	A1	8/2017	Khattak et al.	
2017/0266657	A1	9/2017	Khattak et al.	

FOREIGN PATENT DOCUMENTS

JP	2011-013043	A	1/2011
JP	2012-127978	A	7/2012
JP	2012-173181	A	9/2012
JP	2012-521558		9/2012
WO	WO-2006/121510	A1	11/2006
WO	WO-2010/003212	A1	1/2010
WO	WO-2010/109392	A1	9/2010
WO	WO-2012/025729	A1	3/2012
WO	WO-2012/032294	A1	3/2012

OTHER PUBLICATIONS

U.S. Notice of Allowance on U.S. Appl. No. 15/487,956 dated Jan. 31, 2018.
U.S. Notice of Allowance on U.S. Appl. No. 29/584,030 dated Feb. 22, 2018.
U.S. Notice of Allowance on U.S. Appl. No. 29/584,715 dated Feb. 20, 2018.
U.S. Office Action on U.S. Appl. No. 15/336,502 dated Feb. 21, 2018.
U.S. Office Action on U.S. Appl. No. 29/584,030 dated Nov. 29, 2017.
U.S. Appl. No. 29/584,715, filed Nov. 16, 2016, Khattak et al.
Notice of Allowance in U.S. Appl. No. 29/574,538 dated Feb. 17, 2017.
U.S. Final Office Action dated Jul. 14, 2017 in U.S. Appl. No. 15/336,502.
U.S. Final Office Action dated Jul. 21, 2017 in U.S. Appl. No. 15/336,739.
U.S. Non-Final Office Action dated Feb. 9, 2017 in U.S. Appl. No. 15/336,715.
U.S. Non-Final Office Action dated Jan. 27, 2017 in U.S. Appl. No. 15/336,502.
U.S. Non-Final Office Action dated Jan. 30, 2017 in U.S. Appl. No. 15/336,487.
U.S. Non-Final Office Action dated Mar. 16, 2017 in U.S. Appl. No. 15/336,712.
U.S. Non-Final Office Action dated Mar. 21, 2017 in U.S. Appl. No. 15/336,739.
U.S. Notice of Allowability in U.S. Appl. No. 15/336,735, dated Feb. 13, 2017.
U.S. Notice of Allowance in U.S. Appl. No. 15/336,712, dated Sep. 20, 2017.
U.S. Notice of Allowance in U.S. Appl. No. 14/205,146, dated Jun. 23, 2017, 11 pages.
U.S. Notice of Allowance in U.S. Appl. No. 15/172,077, dated Feb. 10, 2017.
U.S. Notice of Allowance in U.S. Appl. No. 15/336,487, dated Jun. 6, 2017, 26 pages.
U.S. Notice of Allowance in U.S. Appl. No. 15/336,712, dated Jul. 12, 2017, 9 pages.
U.S. Notice of Allowance in U.S. Appl. No. 15/336,715, dated May 17, 2017, 17 pages.
U.S. Notice of Allowance in U.S. Appl. No. 15/336,715, dated Jun. 29, 2017, 3 pages.
U.S. Office Action in U.S. Appl. No. 15/487,956, dated Oct. 18, 2017.
U.S. Supplemental Notice of Allowability in U.S. Appl. No. 15/172,077 dated Mar. 7, 2017.
PCT International Search Report and Written Opinion for Application No. PCT/US2018/015111 dated Apr. 13, 2018. (11 pages).

* cited by examiner

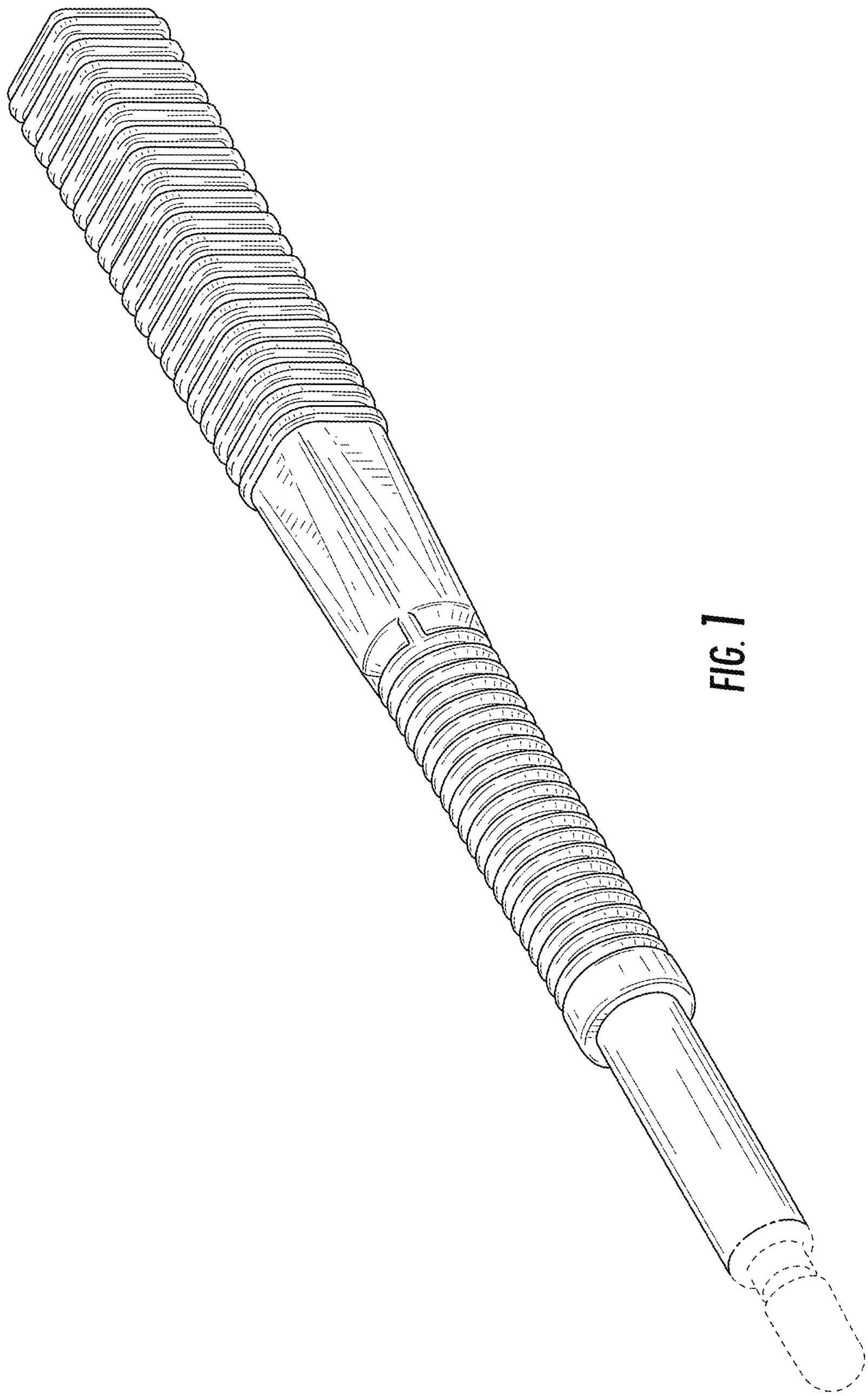

FIG. 1

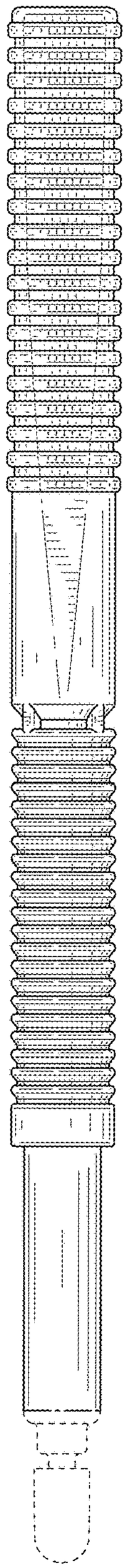

FIG. 2

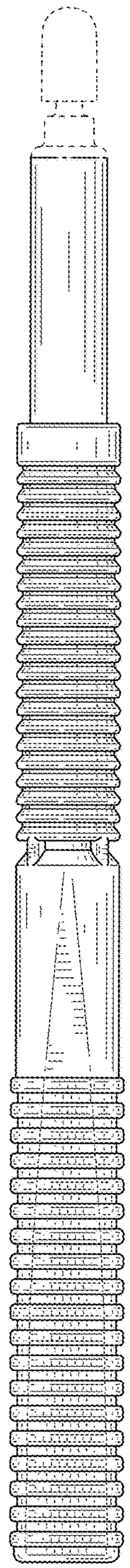

FIG. 3

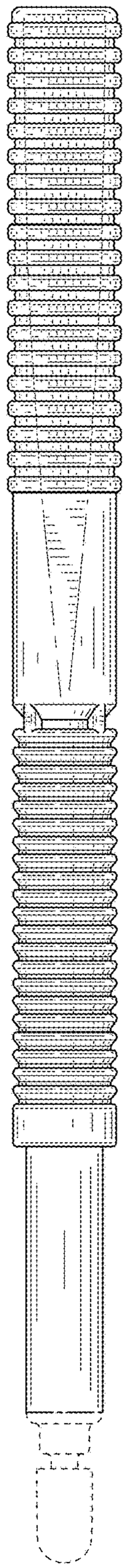

FIG. 4

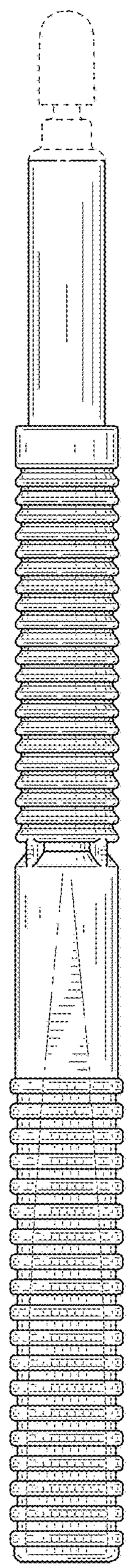

FIG. 5

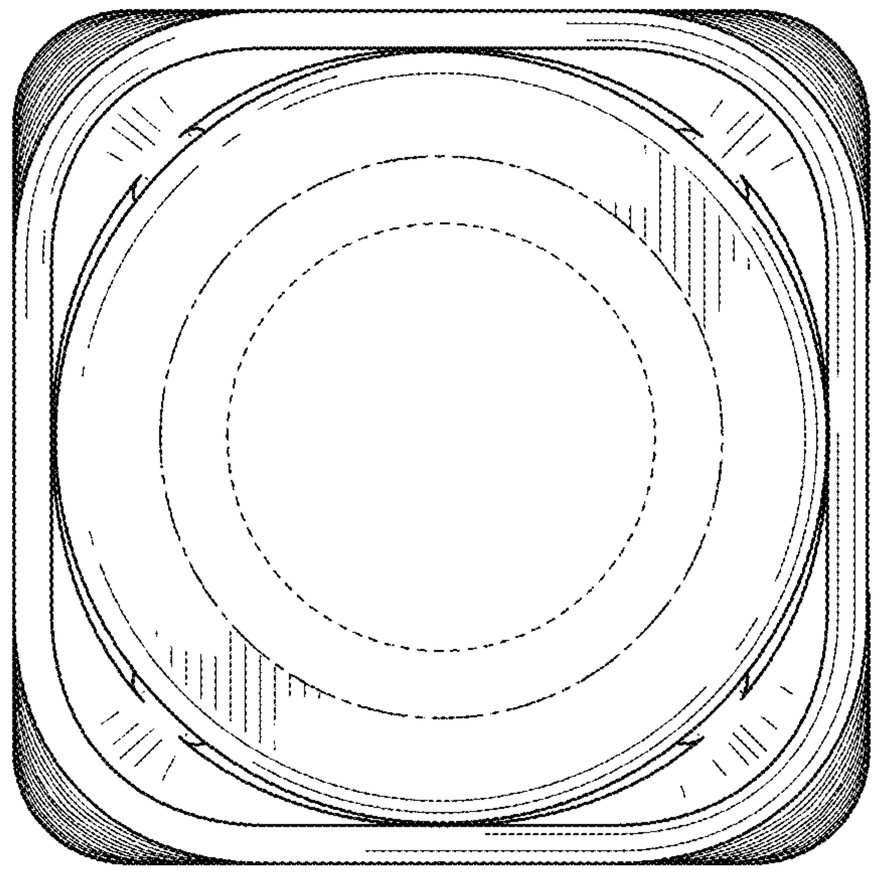

FIG. 6

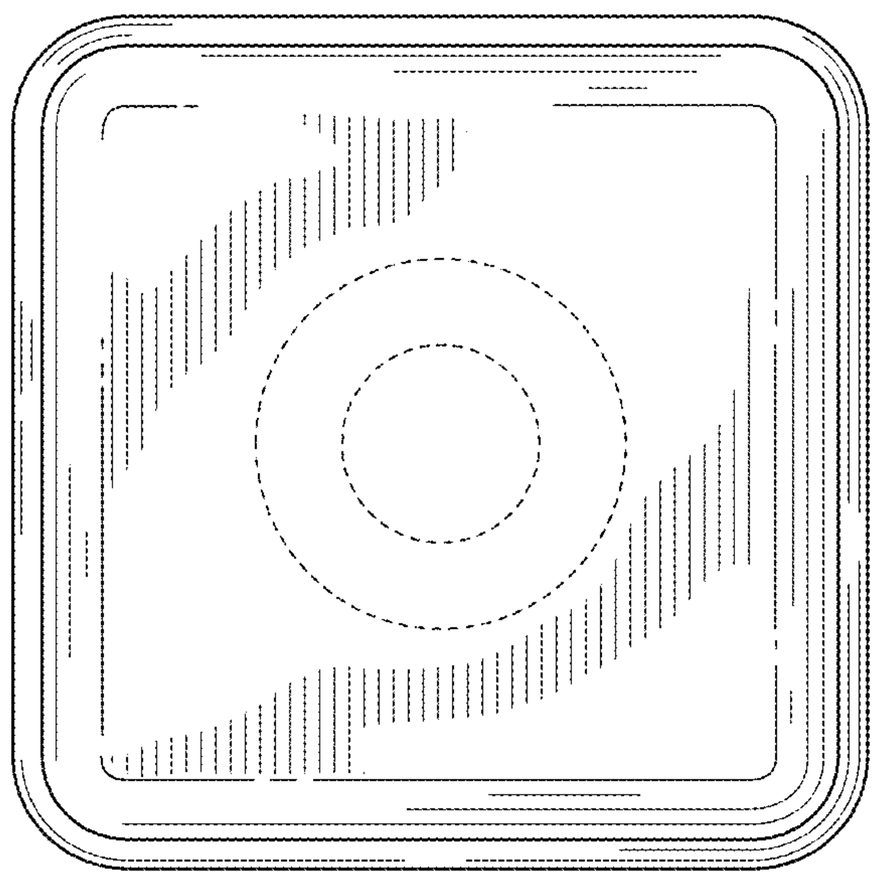

FIG. 7